MOLDER 3 & 2

BUREAU OF NAVAL PERSONNEL

NAVY TRAINING COURSE NAVPERS 10584-B

PREFACE

This training course was prepared for men of the Navy and of the Naval Reserve who are preparing for advancement to Molder Third Class and Molder Second Class. Combined with the necessary practical experience and a review of other applicable Navy Training Courses, a knowledge of the information in this training course will help the reader meet advancement requirements.

Molder 3 & 2, NavPers 10584-B, was prepared by the U. S. Navy Training Publications Center, Washington, D. C. for the Bureau of Naval Personnel. Information provided by numerous manufacturers and technical societies is gratefully acknowledged. Technical assistance was furnished by the Bureau of Ships and the U. S. Naval School, Molders, Class A, San Diego, California.

Original Edition 1952
Major Revision 1958
Reprinted with Minor Changes 1963
Major Revision 1964

THE UNITED STATES NAVY

GUARDIAN OF OUR COUNTRY

The United States Navy is responsible for maintaining control of the sea and is a ready force on watch at home and overseas, capable of strong action to preserve the peace or of instant offensive action to win in war.

It is upon the maintenance of this control that our country's glorious future depends; the United States Navy exists to make it so.

WE SERVE WITH HONOR

Tradition, valor, and victory are the Navy's heritage from the past. To these may be added dedication, discipline, and vigilance as the watchwords of the present and the future.

At home or on distant stations we serve with pride, confident in the respect of our country, our shipmates, and our families.

Our responsibilities sober us; our adversities strengthen us.

Service to God and Country is our special privilege. We serve with honor.

THE FUTURE OF THE NAVY

The Navy will always employ new weapons, new techniques, and greater power to protect and defend the United States on the sea, under the sea, and in the air.

Now and in the future, control of the sea gives the United States her greatest advantage for the maintenance of peace and for victory in war.

Mobility, surprise, dispersal, and offensive power are the keynotes of the new Navy. The roots of the Navy lie in a strong belief in the future, in continued dedication to our tasks, and in reflection on our heritage from the past.

Never have our opportunities and our responsibilities been greater.

CREDITS

The illustrations indicated below are included in this edition of Molder 3 & 2, through the courtesy of the designated companies, societies, and publishers. Permission to use these illustrations is gratefully acknowledged. Permission to reproduce illustrations and other materials in this publication must be obtained from the source.

Source	Figure Number
Air Reduction Sales, Inc.	4-17
Ajax Electrothermic Corp.	5-8, 5-12
Alpha-Lux Company	4-3*
American Brass Company	10-2
American Foundrymen's Society	3-3, 3-5, 3-7, 3-9, 3-13, 3-14
American Technical Society	8-15
Clark Instrument Inc.	10-11
Freeman Supply Company	4-2, 4-9, 4-10,* 4-11*
General Electric Company	5-3
Harry W. Dietert Company	6-4
John Wiley and Sons, Inc.	7-34
Kuhlaman Electric Company	5-1,* 5-2, 5-4, 5-5, 5-6, 5-7
Leeds and Northrup Company	4-12, 4-14*
Lindberg Engineering Corp.	5-13, 5-14
Linde Air Products	4-18*
Meehanite Metal Corp.	9-7, 11-1, 11-2
National Engineering Company	4-1
Pangborn Corp.	4-16
Sterling Wheelbarrow Company	4-4
Wm.Laidlaw Inc.	4-15

*(Adapted from illustrations supplied by the source)

READING LIST

NAVY TRAINING COURSES

Basic Handtools (metalworking skills only)	NavPers 10085-A
Shipfitter 3 & 2 (Chapter 9)	NavPers 10595
Blueprint Reading and Sketching (Chapters 1-4)	NavPers 10077-B

OTHER PUBLICATIONS

Foundry Manual (Chapters 1, 4-9)	NavShips 250-0334

USAFI TEXTS

United States Armed Forces Institute (USAFI) courses for additional reading and study are available through your educational services officer.* A partial list of these courses applicable to your rating follows:

Number	Title
C151	General Mathematics I
C152	General Mathematics II
C835	Machine Shop I

---

* "Members of the United States Armed Forces Reserve Components when on active duty are eligible to enroll for USAFI courses, services, and materials if the orders calling them to active duty specify a period of 120 days or more; or if they have been on active duty for a period of 120 days or more regardless of the time specified in the active duty orders."

CONTENTS

CHAPTER 1

PREPARING FOR ADVANCEMENT

If you want to be one of the key figures in the manufacture of metal objects, and want to create items produced by one of the oldest trades of civilization—and if you can visualize, imagine, and work with tools, working in the foundry as a Navy Molder is the job for you.

Among skilled men, ashore and afloat, the rammer and slick rating insigne of the Molder is recognized as the emblem of an artisan. This recognition is based on the creative conception, skill, and sound judgment combined with practical knowledge necessary to transform an idea (pattern) into a metallic shape or form called a casting.

The Molder's knowledge of various sands and the metallurgical aspects of metals and alloys makes foundry practice one of the most interesting and challenging jobs in civilian or military life. The work is never monotonous because every job presents new and different problems.

In this chapter, and the others that follow, you will find general and technical information which will help you in attaining the knowledge and skill necessary to win the Molder's emblem. Start working for it now. It's worth having. Keep in mind, however, that you cannot depend on the printed word alone to become a Molder; you must supplement the information you obtain from books with actual practice and with the knowledge acquired from observing experienced men at work.

This training course is designed to help you meet the technical qualifications for advancement to ML3 and ML2. The Molder qualifications (see information on the Manual of Qualifications for Advancement in Rating given later in this chapter) which were used as a guide in preparing this training course, were current through Revision A.

The subject matter contained in this training course has been organized in such a way as to permit you to progress at a reasonable rate from the fairly simple molds and core boxes to the more complex applications discussed in later chapters.

Chapters 2 through 14 of this training course deal with technical subject matter related to the Molder rating. Chapter 2 provides information on the relationship of Patternmaking to Foundry Practice, classification of Navy foundries, various foundry processes, and the basic design rules necessary to construct a mold from a pattern that is used for the production of a sound, usable service casting.

Chapters 3 and 4 discuss the various Molder's handtools and shop equipment. Chapter 5 discusses the various melting units (furnaces) used in Navy foundries. Chapter 6 discusses the terminology of foundry sands and related mold materials, and the preparation of foundry sands for the application of making molds. Chapter 7 discusses the various types of molds and their construction, including special devices and calculating of mold pressure allowances. Chapters 8 and 9 discuss cores and coremaking, including classes of cores, characteristics, requirements, core prints, types of cores and application, core materials, equipment, mixtures, and coremaking techniques. Chapter 10 discusses the internal structure, classification, identification, and Navy Specifications of metals and alloys. Chapter 11 discusses solidification and solidification control techniques, and the calculation of the weight of the casting and the furnace charge. Chapter 12 discusses the melting, tapping and pouring, shaking out, and cleaning of castings. Included in chapter 12 are the causes and the possible prevention of casting defects as related to proper foundry procedures. Chapter 13 contains the information necessary for the performance of the administrative duties required of the Molder 3 and Molder 2. Chapter 14 discusses the new Planned Maintenance System.

THE ENLISTED RATING STRUCTURE

The present enlisted rating structure, established in 1957, includes three types of ratings—general ratings, service ratings, and emergency ratings.

GENERAL RATINGS identify broad occupational fields of related duties and functions. Some general ratings include service ratings; others do not. Both Regular Navy and Naval Reserve personnel may hold general ratings.

SERVICE RATINGS identify subdivisions or specialties within a general rating. Although service ratings can exist at any petty officer level, they are most common at the PO3 and PO2 levels. Both Regular Navy and Naval Reserve personnel may hold service ratings.

EMERGENCY RATINGS generally identify civilian occupational fields. Emergency ratings do not need to be identified as ratings in the peacetime Navy, but their identification is required in time of war.

THE MOLDER RATING

Since 1917, when Navy Molders were initially incorporated into the Navy's rating structure, foundry personnel have performed a multitude of tasks in maintaining the fighting efficiency of the forces afloat. During World War I, they made their molds and poured their castings aboard battleships, repair ships, and at shore stations. Between wars they provided important repair services to the fleet and participated in fleet training programs. As battleship, repair ship, and shore station sailors, Molders manned General Quarters stations when Pearl Harbor was attacked on December 7, 1941; and some, for instance those aboard the ARIZONA, went down with their ship. At the same time, others participated in the rescue and salvage operations that began before the last Japanese planes disappeared from Hawaii's skies.

While World War II was in its early stages, our old battleships were modernized and provided with better antiaircraft batteries. To make room for modernization, foundries were removed from combatant ships and foundry personnel were transferred to repair units. Since foundry areas were not included in the design of the latest dreadnoughts, and since foundries were removed from the older battleships, the modernization program of 1942 marked the passing of Molders from the complements of first-line fighting ships. Although Molders did not sail the seas in first-line fighting ships in World War II, they were a vital part of the supporting force which made possible the continued presence of our battle force in advanced areas.

The Molder rating, which is a general rating, does not have any service or emergency ratings. The scope of the Molder rating entails the responsibility of operating foundries aboard ship and at shore stations. Molders make molds and cores; rig flasks; prepare heats; and pour castings of ferrous, nonferrous, and alloy metals; clean castings; and pour bearings.

In general, the Molder is assigned to a repair ship or tender where he prepares molding sand and calculates the composition of a metal or alloy (according to the Bureau of Ships Specifications) to be used to yield a casting produced from molds formed by a pattern prepared by the Patternmaker.

In the foundry aboard a repair ship or tender, the Fireman, who is striking for Molder 3, is basically on the getting acquainted-orientation detail. Usually he has had some experience in foundry practice or mechanical drafting before coming into the Navy. There are usually one or two strikers in each foundry; they help the third, second, and first class Molders in the performance of their duties. As the striker progresses, he helps make simple molds and cores, and learns the fundamentals of the trade. One of his principal duties is learning how to maintain all of the foundry equipment in the shop and learning all the pertinent safety precautions.

There is also a Molder Third Class who has started to go places in the Molder rating. He is capable of making simple molds from either solid or parted patterns. He may construct a mold from a worn or broken casting. Occasionally, he will help the higher rated men to make a mold of a more complicated nature. In actual practice, many third and second class learn to do this in the lower ratings.

The Molder Second Class gets into the more complicated mold and core work. He makes molds that require more detailed work, such as roll-out loose pieces, gating, and risering. He also mixes sand and makes the various types of cores as necessary.

In the normal complement of a shipboard foundry there is a Molder First Class and a Chief Molder. The ML1 handles the more detailed mold and core work. In the absence of the chief, he takes over the responsibility of the foundry. The MLC is usually primarily concerned with supervisory duties. He trains the lower rated men, assigns work, checks the quality of the foundry's workmanship, handles personnel matters, works out new procedures, makes reports, orders supplies and materials, and performs other additional duties required of the Chief Petty Officer.

As a Molder you will be concerned mostly with repair activities. The Navy operates a number of different types of repair ships, but those to which you are most likely to be assigned are destroyer tenders (AD), repair ships (AR), internal combustion engine repair ships (ARG), and submarine tenders (AS). Repair ships and tenders are specially designed naval ships whose primary mission is to provide repair facilities and services to the forces afloat. These ships are floating bases, capable of accomplishing a large variety of general and specialized work. In theory and in fact, these ships are small scale navy yards.

When your assignment sends you to shore duty, you will work within the framework of an organization having a similar repair mission. Occasionally the Molder performs duties other than those of his rating, such as shore patrol, master at arms, and special details. Naturally, there are some exceptions, but generally, a Molder, whether ashore or afloat, is assigned to the repair department.

The Molder should have a good background in and aptitude for mathematics. For those lacking in this area, the training courses listed later in this chapter are strongly recommended. In addition to mathematics, the Navy Molder should have a working knowledge of patternmaking and machine shop practices. The Molder must have an ability to work with his hands as well as his mind. However, if you have not had much experience working with your hands, you will gain confidence in yourself and in your work through performance of your daily duties.

Your ability as a Molder is not measured in terms of the amount of shop equipment that you can operate, but your ability is measured in terms of how well you can get the most out of the existing equipment to get the job done. Regardless of the type of shop equipment that you may have at your duty assignment, the experience gained will be beneficial in helping you to qualify for advancement in rating.

As a petty officer, you will have an important practical part to play in the shipboard leadership program in that you will be in charge of a group of strikers. As a leader, you will have two main responsibilities—to accomplish your naval mission and to take care of your men. (The general principles and techniques of leadership are covered in Military Requirements for Petty Officer 3 and 2, NavPers 10056-A.)

Assume that you are aboard ship assigned to the foundry. Assume you also are the senior Molder aboard and that you have several ML strikers in the shop. A big part of your job is to learn everything you can about foundry practice so you will be able to pass this information and knowledge to your men. You must also inspire your strikers to do their work as efficiently as possible.

A characteristic of the American fighting man is that he wants to know the reason behind his being called upon to perform certain tasks. You must explain to your strikers the importance of their work and how it affects the overall fighting efficiency of your ship. Show them that even routine tasks greatly contribute to the overall effort. During exercises and drills make them feel that they are contributing to the overall efficiency of the ship. When led with courage, spirit, and intelligence your men will respond by backing you up. Remember that enthusiasm is contagious, therefore you must serve as the inspiration for your men.

To lead your men effectively and gain the confidence of your superiors, you must also have a strong moral character. Some of the character traits that can be developed by conscientious study and practice are loyalty, integrity, and self-confidence.

Loyalty is one of the most essential qualities of a good leader. Loyalty to your country, to your Navy, to your division, to your chief, to your senior petty officers, and to the men who work with and for you is essential if you are to succeed.

Deal with your men squarely and honestly. If you do, you will win and hold their respect. Be dependable. Keep your promises. A reputation of being a "square shooter" is worth every effort you put into obtaining it.

Remember that good leaders display self-confidence based on thorough knowledge of their job and the ability to perform their job. If you have confidence in yourself, you will not find it difficult to inspire confidence in your men.

ADVANCEMENT IN RATING

Some of the rewards of advancement in rating are easy to see. You get more pay. Your job assignments become more interesting and more challenging. You are regarded with greater respect by officers and enlisted personnel. You enjoy the satisfaction of getting ahead in your chosen Navy career.

But the advantages of advancing in rating are not yours alone. The Navy also profits. Highly trained personnel are essential to the functioning of the Navy. By each advancement in rating, you increase your value to the Navy in two ways. First, you become more valuable as a technical specialist in your own rating. And second, you become more valuable as a person who can train others and thus make far-reaching contributions to the entire Navy.

HOW TO QUALIFY FOR ADVANCEMENT

What must you do to qualify for advancement in rating? The requirements may change from time to time, but usually you must:

1. Have a certain amount of time in your present grade.
2. Complete the required military and professional training courses.
3. Demonstrate your ability to perform all the PRACTICAL requirements for advancement by completing the Record of Practical Factors, NavPers 760.
4. Be recommended by your commanding officer, after the petty officers and officers supervising your work have indicated that they consider you capable of performing the duties of the next higher rate.
5. Demonstrate your KNOWLEDGE by passing a written examination on (a) military requirements and (b) professional qualifications.

Some of these general requirements may be modified in certain ways. Figure 1-1 gives a more detailed view of the requirements for advancement of active duty personnel; figure 1-2 gives this information for inactive duty personnel.

Remember that the requirements for advancement can change. Check with your division officer or training officer to be sure that you know the most recent requirements.

Advancement in rating is not automatic. After you have met all the requirements, you are ELIGIBLE for advancement. You will actually be advanced in rating only if you meet all the requirements (including making a high enough score on the written examination) and if the quotas for your rating permit your advancement.

HOW TO PREPARE FOR ADVANCEMENT

What must you do to prepare for advancement in rating? You must study the qualifications for advancement, work on the practical factors, study the required Navy Training Courses, and study other material that is required for advancement in your rating. To prepare for advancement, you will need to be familiar with (1) the Quals Manual, (2) the Record of Practical Factors, NavPers 760, (3) a NavPers publication called Training Publications for Advancement in Rating, NavPers 10052, and (4) applicable Navy Training Courses. Figure 1-3 illustrates these materials; the following sections describe them and give you some practical suggestions on how to use them in preparing for advancement.

The Quals Manual

The Manual of Qualifications for Advancement in Rating, NavPers 18068A (with changes), gives the minimum requirements for advancement to each rate within each rating. This manual is usually called the "Quals Manual," and the qualifications themselves are often called "quals." The qualifications are of two general types: (1) military requirements, and (2) professional or technical qualifications.

MILITARY REQUIREMENTS apply to all ratings rather than to any one particular rating. Military requirements for advancement to third class and second class petty officer rates deal with military conduct, naval organization, military justice, security, watch standing, and other subjects which are required of petty officers in all ratings.

PROFESSIONAL QUALIFICATIONS are technical or professional requirements that are directly related to the work of each rating.

Both the military requirements and the professional qualifications are divided into subject matter groups; then, within each subject matter group, they are divided into PRACTICAL FACTORS and KNOWLEDGE FACTORS. Practical factors are things you must be able to DO. Knowledge factors are things you must KNOW in order to perform the duties of your rating.

ACTIVE DUTY ADVANCEMENT REQUIREMENTS

REQUIREMENTS *	E1 to E2	E2 to E3	E3 to E4	E4 to E5	E5 to E6	† E6 to E7	† E7 to E8	† E8 to E9
SERVICE	4 mos. service—or completion of recruit training.	6 mos. as E-2.	6 mos. as E-3.	12 mos. as E-4.	24 mos. as E-5.	36 mos. as E-6.	48 mos. as E-7. 8 of 11 years total service must be enlisted. Must be permanent appointment.	24 mos. as E-8. 10 of 13 years total service must be enlisted.
SCHOOL	Recruit Training.		Class A for PR3, DT3, PT3, AME 3, HM 3			Class B for AGCA, MUCA, MNCA.		
PRACTICAL FACTORS	Locally prepared check-offs.	Records of Practical Factors, NavPers 760, must be completed for E-3 and all PO advancements.						
PERFORMANCE TEST			Specified ratings must complete applicable performance tests before taking examinations.					
ENLISTED PERFORMANCE EVALUATION	As used by CO when approving advancement.		Counts toward performance factor credit in advancement multiple.					
EXAMINATIONS	Locally prepared tests.		Navy-wide examinations required for all PO advancements.				Navy-wide, selection board, and physical.	
NAVY TRAINING COURSE (INCLUDING MILITARY REQUIREMENTS)		Required for E-3 and all PO advancements unless waived because of school completion, but need not be repeated if identical course has already been completed. See NavPers 10052 (current edition).					Correspondence courses and recommended reading. See NavPers 10052 (current edition).	
AUTHORIZATION	Commanding Officer		U.S. Naval Examining Center			Bureau of Naval Personnel		
	TARS attached to the air program are advanced to fill vacancies and must be approved by CNARESTRA.							

* All advancements require commanding officer's recommendation.

† 2 years obligated service required.

Figure 1-1.—Active duty advancement requirements.

INACTIVE DUTY ADVANCEMENT REQUIREMENTS

REQUIREMENTS *		E1 to E2	E2 to E3	E3 to E4	E4 to E5	E5 to E6	E6 to E7	E8	E9
	FOR THESE DRILLS PER YEAR								
TOTAL TIME IN GRADE	48	6 mos.	6 mos.	15 mos.	18 mos.	24 mos.	36 mos.	48 mos.	24 mos.
	24	9 mos.	9 mos.	15 mos.	18 mos.	24 mos.	36 mos.	48 mos.	24 mos.
	NON-DRILLING	12 mos.	24 mos.	24 mos.	36 mos.	48 mos.	48 mos.		
DRILLS ATTENDED IN GRADE †	48	18	18	45	54	72	108	144	72
	24	16	16	27	32	42	64	85	32
TOTAL TRAINING DUTY IN GRADE †	48	14 days	14 days	14 days	14 days	28 days	42 days	56 days	28 days
	24	14 days	14 days	14 days	14 days	28 days	42 days	56 days	28 days
	NON-DRILLING	None	None	14 days	14 days	28 days	28 days		
PERFORMANCE TESTS				Specified ratings must complete applicable performance tests before taking examination.					
PRACTICAL FACTORS (INCLUDING MILITARY REQUIREMENTS)		Record of Practical Factors, NavPers 760, must be completed for all advancements.							
NAVY TRAINING COURSE (INCLUDING MILITARY REQUIREMENTS)		Completion of applicable course or courses must be entered in service record.							
EXAMINATION		Standard exams are used where available, otherwise locally prepared exams are used.						Standard EXAM, Selection Board, and Physical.	
AUTHORIZATION		District commandant or CNARESTRA					Bureau of Naval Personnel		

* Recommendation by commanding officer required for all advancements.

† Active duty periods may be substituted for drills and training duty.

Figure 1-2.—Inactive duty advancement requirements.

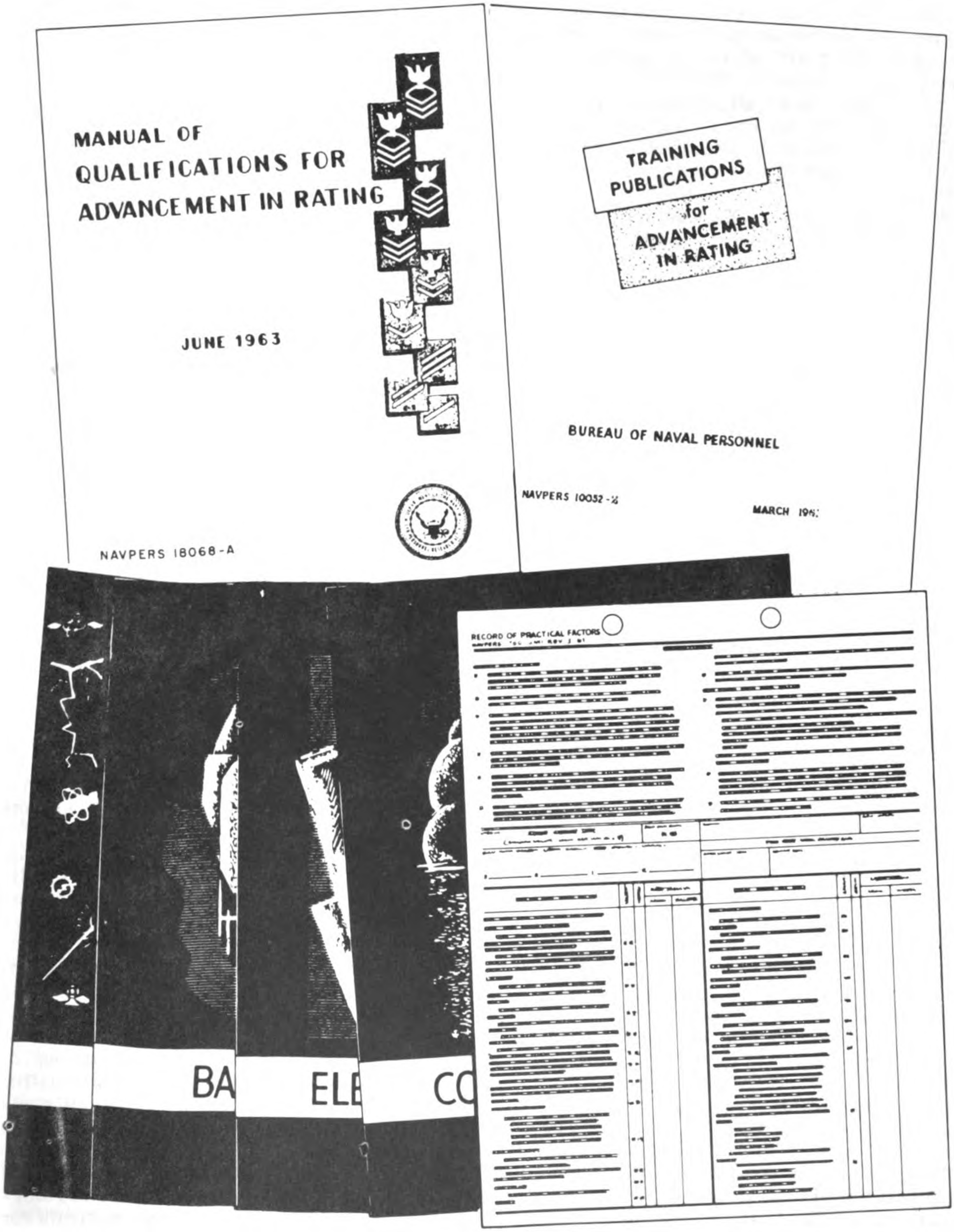

Figure 1-3.—Materials used in preparing for advancement.

The written examination you will take for advancement in rating will contain questions relating to the practical factors and the knowledge factors of both the military requirements and the professional qualifications. If you are working for advancement to second class remember that you may be examined on third class qualifications as well as on second class qualifications.

The Quals Manual is kept current by means of changes. The professional qualifications for your rating which are covered in this training course were current at the time the course was printed. By the time you are studying this course, however, the quals for your rating may have been changed. Never trust any set of quals until you have checked it against an UP-TO-DATE copy in the Quals Manual.

Record of Practical Factors

Before you can take the servicewide examination for advancement in rating, there must be an entry in your service record to show that you have qualified in the practical factors of both the military requirements and the professional qualifications. A special form known as the RECORD OF PRACTICAL FACTORS, NavPers 760, is used to keep a record of your practical factor qualifications. This form is available for each rating. The form lists all practical factors, both military and professional. As you demonstrate your ability to perform each practical factor, appropriate entries are made in the DATE and INITIALS columns.

Changes are made periodically to the Manual of Qualifications for Advancement in Rating, and revised forms of NavPers 760 are provided when necessary. Extra space is allowed on the Record of Practical Factors for entering additional practical factors as they are published in changes to the Quals Manual. The Record of Practical Factors also provides space for recording demonstrated proficiency in skills which are within the general scope of the rating but which are not identified as minimum qualifications for advancement.

If you are transferred before you qualify in all practical factors, the NavPers 760 form should be forwarded with your service record to your next duty station. You can save yourself a lot of trouble by making sure that this form is actually inserted in your service record before you are transferred. If the form is not in your service record, you may be required to start all over again and requalify in the practical factors which have already been checked off.

NavPers 10052

Training Publications for Advancement in Rating, NavPers 10052 (revised), is a very important publication for anyone preparing for advancement in rating. This bibliography lists required and recommended Navy Training Courses and other reference material to be used by personnel working for advancement in rating. NavPers 10052 is revised and issued once each year by the Bureau of Naval Personnel. Each revised edition is identified by a letter following the NavPers number. When using this publication, be SURE that you have the most recent edition.

If extensive changes in qualifications occur in any rating between the annual revisions of NavPers 10052, a supplementary list of study material may be issued in the form of a BuPers Notice. When you are preparing for advancement, check to see whether changes have been made in the qualifications for your rating. If changes have been made, see if a BuPers Notice has been issued to supplement NavPers 10052 for your rating.

The required and recommended references are listed by rate level in NavPers 10052. If you are working for advancement to third class, study the material that is listed for third class. If you are working for advancement to second class, study the material that is listed for second class; but remember that you are also responsible for the references listed at the third class level.

In using NavPers 10052, you will notice that some Navy Training Courses are marked with an asterisk (*). Any course marked in this way is MANDATORY—that is, it must be completed at the indicated rate level before you can be eligible to take the servicewide examination for advancement in rating. Each mandatory course may be completed by (1) passing the appropriate enlisted correspondence course that is based on the mandatory training course; (2) passing locally prepared tests based on the information given in the training course; or (3) in some cases, successfully completing an appropriate Class A school.

Do not overlook the section of NavPers 10052 which lists the required and recommended references relating to the military requirements for advancement. Personnel of ALL ratings must complete the mandatory military requirements training course for the appropriate rate level before they can be eligible to advance in rating.

The references in NavPers 10052 which are recommended but not mandatory should also be studied carefully. ALL references listed in NavPers 10052 may be used as source material for the written examinations, at the appropriate rate levels.

Navy Training Courses

There are two general types of Navy Training Courses. RATING COURSES (such as this one) are prepared for most enlisted ratings. A rating training course gives information that is directly related to the professional qualifications of ONE rating. SUBJECT MATTER COURSES or BASIC COURSES give information that applies to more than one rating.

Navy Training Courses are revised from time to time to keep them up to date technically. The revision of a Navy Training Course is identified by a letter following the NavPers number. You can tell whether any particular copy of a Navy Training Course is the latest edition by checking the NavPers number and the letter following this number in the most recent edition of <u>List of Training Manuals and Correspondence Courses</u>, NavPers 10061. (NavPers 10061 is actually a catalog that lists all current training courses and correspondence courses; you will find this catalog useful in planning your study program.)

Navy Training Courses are designed to help you prepare for advancement in rating. The following suggestions may help you to make the best use of this course and other Navy training publications when you are preparing for advancement in rating.

1. Study the military requirements and the professional qualifications for your rating before you study the training course, and refer to the quals frequently as you study. Remember, you are studying the training course primarily in order to meet these quals.

2. Set up a regular study plan. It will probably be easier for you to stick to a schedule if you can plan to study at the same time each day. If possible, schedule your studying for a time of day when you will not have too many interruptions or distractions.

3. Before you begin to study any part of the training course intensively, become familiar with the entire book. Read the preface and the table of contents. Check through the index. Look at the appendixes. Thumb through the book without any particular plan, looking at the illustrations and reading bits here and there as you see things that interest you.

4. Look at the training course in more detail, to see how it is organized. Look at the table of contents again. Then, chapter by chapter, read the introduction, the headings, and the subheadings. This will give you a pretty clear picture of the scope and content of the book. As you look through the book in this way, ask yourself some questions: What do I need to learn about this? What do I already know about this? How is this information related to information given in other chapters? How is this information related to the qualifications for advancement in rating?

5. When you have a general idea of what is in the training course and how it is organized, fill in the details by intensive study. In each study period, try to cover a complete unit—it may be a chapter, a section of a chapter, or a subsection. The amount of material that you can cover at one time will vary. If you know the subject well, or if the material is easy, you can cover quite a lot at one time. Difficult or unfamiliar material will require more study time.

6. In studying any one unit—chapter, section, or subsection—write down the questions that occur to you. Many people find it helpful to make a written outline of the unit as they study, or at least to write down the most important ideas.

7. As you study, relate the information in the training course to the knowledge you already have. When you read about a process, a skill, or a situation, try to see how this information ties in with your own past experience.

8. When you have finished studying a unit, take time out to see what you have learned. Look back over your notes and questions. Maybe some of your questions have been answered, but perhaps you still have some that are not answered. Without looking at the training course, write down the main ideas that you have gotten from studying this unit. Don't just quote the book. If you can't give these ideas in your own words, the chances are that you have not really mastered the information.

9. Use Enlisted Correspondence Courses whenever you can. The correspondence courses are based on Navy Training Courses or on other appropriate texts. As mentioned before, completion of a mandatory Navy Training Course can be accomplished by passing an Enlisted Correspondence Course based on the Navy

Training Course. You will probably find it helpful to take other correspondence courses, as well as those based on mandatory training courses. Taking a correspondence course helps you to master the information given in the training course, and also helps you see how much you have learned.

10. Think of your future as you study Navy Training Courses. You are working for advancement to third class or second class right now, but someday you will be working toward higher rates. Anything extra that you can learn now will help you both now and later.

SOURCES OF INFORMATION

One of the most useful things you can learn about a subject is how to find out more about it. No single publication can give you all the information you need to perform the duties of your rating. You should learn where to look for accurate, authoritative, up-to-date information on all subjects related to the military requirements for advancement and the professional qualifications of your rating.

Some of the publications described here are subject to change or revision from time to time—some at regular intervals, others as the need arises. When using any publication that is subject to change or revision, be sure that you have the latest edition. When using any publication that is kept current by means of changes, be sure you have a copy in which all official changes have been made. Studying canceled or obsolete information will not help you to do your work or to advance in rating; it is likely to be a waste of time, and may even be seriously misleading.

BUPERS PUBLICATIONS

Some of the BuPers publications that you will need to study or refer to as you prepare for advancement have already been discussed earlier in this chapter. Some additional BuPers publications that you may find useful are listed here.

Basic Handtools, NavPers 10085-A.
Blueprint Reading and Sketching, NavPers 10077-B.
Fireman, NavPers 10520-B.
Mathematics, Vol. 1, NavPers 10069-B.
Patternmaker 3 and 2, NavPers 10578-B.

In addition, you may find it useful to consult the Navy Training Courses prepared for other Group VII (Engineering and Hull) ratings. Reference to these training courses will add to your knowledge of the duties of other men in the engineering and repair departments aboard ship.

BUSHIPS PUBLICATIONS

A number of publications issued by the Bureau of Ships will be of interest to you. While you do not need to know everything that is given in the publications mentioned here, you should have a general idea of where to find information in BuShips publications.

The Bureau of Ships Technical Manual, NavShips 250-000, is the basic doctrine publication of the Bureau of Ships. Chapters of particular importance to you include the following:

Chapter 12, Section VII	Zinc and Medium Steel Protectors for Hulls.
Chapter 9330	Stowage of Safe, Semisafe, and Dangerous Materials.
Chapter 40	Tables of Technical Data.
Chapter 46	Article 46.45 Galvanic Corrosion.
Chapter 9910	Workshop Equipment on Ships.

The Foundry Manual, NavShips 250-0334 is the basic manual for foundry practice in the Navy. It is intended primarily for use by foundry personnel aboard repair ships and tenders.

The Bureau of Ships Journal is a monthly publication which contains interesting and useful articles. This magazine is particularly useful because it presents information which supplements and clarifies information given in the Bureau of Ships Technical Manual and because it presents information on new developments.

MANUFACTURERS' TECHNICAL MANUALS

The manufacturers' technical manuals that are furnished with most machinery units and many items of equipment are valuable sources of information on operation, maintenance, and repair. The manufacturers' technical manuals that deal with BuShips machinery and equipment are given NavShips numbers. You should also become familiar with patternmaker's handbooks, machinery handbooks, and machinist's handbooks, so that you will know how to locate information in these publications.

USAFI

The United States Armed Forces Institute (USAFI) provides opportunities for military personnel of all the services to continue their education while on active duty. You should see your education officer about the details concerning taking these courses. Many colleges in the United States grant credit for courses taken in the USAFI program.

TRAINING FILMS

Training films available to naval personnel are a valuable source of information on many technical subjects. A selected list of training films that may be useful to you is given in appendix I of this training course. Other training films that may be of interest to you are listed in the United States Navy Film Catalog, NavPers 10000 (revised).

CHAPTER 2

FOUNDING

The foundry is a place where metal parts are formed to precise size and shape by a process known as FOUNDING or FOUNDRY PRACTICE (or the production of castings). To the layman, a casting is a metallic shape produced somewhat mysteriously in the foundry. Actually a casting is the result of a process whereby metals and alloys are transformed by heat from a solid state to a liquid state and then poured into a mold made of a refractory material. This refractory mold is capable of withstanding the heat and eroding action (force) of the molten metal, and allowing the molten metal to return to a solid state. After the casting has cooled and is removed from the mold, it will be found that the casting has taken the shape that was planned by the combined efforts of the design engineer, the Patternmaker, and the Molder.

This chapter contains information on the relationship of foundry practice to patternmaking, the classification of Navy foundries, the various sand casting processes required of the Molder rating, the special molding processes which the Navy Molder may or may not be required to perform, and the basic design of castings.

RELATIONSHIP OF FOUNDRY PRACTICE TO PATTERNMAKING

In order to make a mold, a pattern is necessary. Years ago many molds were made directly from a blueprint or from an old casting, but today wherever you find a Navy foundry there is also a pattern shop. Together they operate as a unit, and each is dependent on the other. Without a pattern of some description the foundries of today would find it very difficult if not impossible to operate.

Before foundry practice was developed into a highly technical skill, most decisions pertaining to pattern construction and the method to be used to produce the cast part were made by the Patternmaker. Pattern construction rather than mold design was too often the primary consideration. Now though, it is fully realized that the pattern is merely a means to an end; the mold's design, with which a metallurgically sound casting may be produced, is considered before the pattern is made. Experience has shown that sound castings are more consistently produced in the most economical manner when supervisory personnel representing the shops concerned with the several phases of a casting's production cooperate in planning the production method. Pooling the skills of such a planning team is necessary for the creation of a sound pattern design that will produce a serviceable casting free from sand, shrinkage, porosity, hot tears, cracks, blow holes, cold shuts, drops, rat tails, pin holes, and other imperfections.

TERMINOLOGY

Before you can understand the subject matter related to foundry practice, you must know the terms used in this specialized trade. However, since patternmaking and foundry practice are closely related trades, particularly as founding applies to the practice of producing objects from metal by one of the casting processes, most of the trade terms are common to both trades. Many of the trade terms are completely unfamiliar to the layman, but they are the terms that will be used in your job. To provide you with the basic terminology of your technical field, foundry trade terms have been included in this training course as APPENDIX IV. If you study these foundry terms until you know them thoroughly, you will not only learn the trade terms in common usage among Molders and Patternmakers, but you will find that this training course will be easier to understand because of your more precise knowledge.

PATTERNMAKING

To define a pattern accurately in all its aspects is difficult, but in simple terms a pattern is a model or guide with which a mold is made. From the Molder's viewpoint the model (pattern) is an imitation of a part that is to be made from metal. The pattern is constructed with certain modifications in order that the Molder may accurately duplicate it in molding sand. Core prints are attached to the pattern for support of the dry sand cores that will form the interior part of the casting. Additional metal thickness (finish) is added to provide for final machining of the casting. The pattern is also made slightly oversize to compensate for the natural shrinkage or contraction of the metal as it cools to room temperature. All of the modifications made on a pattern are elementary (second nature) to the Patternmaker and are usually standard for a given type of metal or alloy. However, there are many ways of constructing a mold, and the pattern will largely determine which way is the most economical.

The mold is actually a negative print of the pattern in molding sand. The pattern must be removed from the sand, leaving an undamaged cavity that can be filled with molten metal. To remove (withdraw) the pattern from the mold, a parting line (parting) and draft must be provided on the pattern. Prior to the construction of the pattern, these things must be determined and they are as much the responsibility of the Molder as they are of the Patternmaker. In effect, the plan for the molding procedure is set up before the pattern is even started.

Where does this plan for the molding procedure come from? Actually, there are two common sources, either an old casting or a blueprint. If the source is an old casting, the planning will be simplified. The metal of the old casting must be identified, the parting line and the amount of draft must be determined, and the sections (interior or exterior) that are to contain a core are established. A close visual inspection of the old casting will provide the answer to most of these questions. The parting line can usually be determined by a thin line of metal (fin) protruding a short distance from the side of the casting. The draft extends from the parting line on a slight angle to the surface that is away from the parting line. When the source of a plan is a blueprint, it becomes necessary for the Molder to read and interpret the blueprint if he is to assist the Patternmaker in planning the construction of the pattern and the mold. (Additional information on blueprints and blueprint reading may be found in chapter 3 of this training course and in Blueprint Reading and Sketching, NavPers 10077-B.)

FOUNDRY PRACTICE

Founding or foundry practice involves four basic procedures: molding, coremaking, melting and pouring molten metals, and cleaning and finishing. Each of these basic procedures may be considered a trade within itself, and each requires special skills and knowledge that are peculiar only to the foundry. Briefly, the four basic procedures in the production of a casting are described in the following paragraphs.

The MOLD may be considered the heart of the foundry because it represents the center of all activities and other phases of foundry practices are grouped around it. The purpose of a mold is to form a cavity with accurate dimensions that will hold and support molten metal until it becomes solid. A mold is constructed of tempered sand bonded with clay or binders that is rammed in a flask and around a pattern that has the required shape and size for the desired casting. Provisions are made for the opening of the mold and the withdrawal of the pattern. An opening is provided for introducing the molten metal into the mold cavity left when the pattern is removed.

COREMAKING is closely related to the mold because the core actually becomes a part of the mold prior to pouring of the molten metal. The purpose of a core is to form a cavity within the casting or to aid the Molder when the surface of the mold cavity is irregular or difficult to form from molding sand. The core has a difficult job to perform and therefore core sand mixtures require a special treatment. The sand from which the core is made is prepared from materials that provide the core with the ability to occupy these cavities in the mold without collapsing. The prepared sand mixture is rammed into CORE BOXES that will give the core the desired shape. The core box is removed from the core and the core is placed on a flat metal plate and baked in an oven to fully develop the properties that are characteristic of the materials that are used in the core sand mixture. After finishing and assembly, the core is placed in the mold cavity where it serves to form part of the interior or exterior of the casting.

MELTING and POURING of metals is a science that requires the utmost accuracy and skill if sound usable castings are to be produced that will meet the rigid specifications set forth by the Bureau of Ships. Melting is done in units called FURNACES, either oil-fired or electric. Heats are prepared from basic metals and placed in the furnace. The furnace operator melts the metal and brings the temperature up to the required pouring temperature. When the metal or alloy is ready for pouring, the metal is tapped from the furnace into ladles, transported to the mold, and poured into the mold cavity through the opening in the mold provided by the Molder. As the metal becomes solid, the casting will assume the shape of the original part or pattern from which the mold was made.

After cooling to room temperature, the mold is opened and the sand is removed from around the casting. The casting is now ready for the final phase of producing a casting, CLEANING and FINISHING. When a casting is taken from the mold there is a certain amount of sand that will adhere to the surface of the casting. High temperature metals will fuse or penetrate the sand to depths of varying degrees. Therefore the sand must be removed by sandblasting, wire brushing, or chipping prior to the machining of the casting. All cores must be knocked out of the casting, all projections not part of the finished casting are to be removed, and all as-cast surfaces must be smooth. Any defect(s) in the casting must be found, and repaired if possible; when repairing is not possible, the casting is rejected and another made.

In the Navy, these founding practices are accomplished in foundries which are classified according to the type and volume of work accomplished.

CLASSIFICATION OF FOUNDRIES

Shipboard foundries which produce castings in the Navy are classified as follows: A, B, C, D, and E. These classes are determined by the type and volume of work that the ship's foundry is expected to produce. These classes are differentiated on the basis of equipment provided and the capacity to cast a particular kind or volume of metal.

Classes A, B, C, D, and E represent foundries designed for five types of services in accordance with the type of metal used or quantity of metal poured. However, due to variations within a class, the type of equipment allowance for each specific ship will be determined by its intended service, as indicated in the ship's specifications.

Class A foundries are capable of casting steel, cast iron, brass, and bronze, up to 800 pounds maximum weight, and casting aluminum, babbitt, and zinc up to 200 pounds maximum weight.

Class B foundries are capable of casting steel on a limited basis up to 500 pounds; cast iron, brass, and bronze up to 700 pounds; and aluminum, babbitt, and zinc up to 200 pounds.

Class C foundries are capable of casting steel up to 300 pounds, and cast iron up to 400 pounds on a limited basis. Brass and bronze up to 600 pounds, and aluminum, babbitt, and zinc up to 200 pounds, can be cast in Class C foundries. In foundries of this class, an oil-fired furnace is used when electric power is limited.

Class D foundries are capable of producing castings principally of brass and bronze up to 600 pounds, and only a limited amount of cast iron where additional air is available for higher heat input.

Castings of brass and bronze up to 300 pounds, and low temperature alloys up to 100 pounds, can be produced in Class E foundries. Although cast iron may be melted in Class E foundries, it is costly to do so. A knowledge of the capacity and heat output of the furnaces aboard your ship or station will enable you to determine the maximum weight casting of a certain alloy that can be produced with this equipment. In addition, the molding method employed, and many other factors will determine the soundness of the casting which can be produced.

FOUNDRY PROCESSES

Because of the importance of foundry practice, castings are usually classified by using the terminology of the method of molding, the casting process, and the mold material. Whichever combination is used in the production of a casting, it is controlled by certain advantages and limitations of the variety of materials to be used in constructing the mold.

Casting processes offer the engineering designer the greatest possible variety of design features and metallurgical properties. Therefore, among the different processes available for shaping metal, the casting process is the most flexible.

The selection of the proper casting process best suited for a design depends on both the technical and economical aspects; that is, such features as size and shape, section thickness, dimensional tolerances, finishing requirements, and the number of castings to be produced. Because each casting process has its own limitations and possesses certain design requirements, a general acquaintance with the various casting processes commonly used in the Navy is necessary. The various casting processes and their effects upon certain pattern construction features are described in the following paragraphs.

SAND CASTING PROCESS

Of all the casting processes used in the production of castings, the most common is the sand casting method. In the sand casting method, sand is used which contains sufficient refractory clay substance to bond strongly without destroying the venting quality when it is rammed to the required degree of hardness for the size and shape of the casting.

Based upon the sand conditioning treatment prior to use and before the casting is poured. molds may be green sand, dry sand, or skin-dried.

Green Sand Molding

Green sand molds may be of natural bonded sand or synthetic (all purpose) sand and can be poured as soon as they are rammed.

Molds made from natural bonded sand contain a sufficient amount of clay bond—either present when the sand was taken from its deposit site, or added before shipment—to make the sand suitable for immediate use. Adding moisture and tempering is the only treatment necessary before use. Molds made from synthetic sand are made by mixing correct proportions of an unbonded sand and a suitable binder such as clay, and tempering the mixture before use.

Detailed information on molding sands used for ferrous and nonferrous metals and alloys is given later in this training course.

Dry Sand Molding

A dry sand mold is slowly baked in an oven before it is used. Dry sand molds are generally used for heavy castings. Dry sand molding has certain disadvantages. The rigidity of the mold resists metal contraction during the solidification of the casting; this resistance is sometimes great enough to cause the casting to crack. On the average, however, dry sand molds provide the best type of molding process for producing heavy castings which will be dependable under normal operating service conditions.

The hard mold surface of a dry sand mold enables it to (1) withstand the eroding action and the force of the flowing metal, and (2) support the weight of large volumes of metal. The baking of the mold eliminates moisture, lessening the possibility of the formation of mold gases and rapid chilling of the metal.

Skin-Dried Molding

A skin-dried mold is one that has been surface heated with a torch; it is used when the requirements call for a mold having the surface characteristics of a dry sand mold, combined with the collapsibility of a green sand mold. Skin-dried molds may also be used when an oven is not available for baking a dry sand mold. When using a skin-dried mold, the melt (liquid metal) must be ready to pour as soon as the mold is completed. The effect of skin-drying will be lost if the mold is allowed to stand, since moisture from the backing sand will penetrate back to the mold cavity surface.

Bench, Floor, and Pit Molding

Molds may be classified according to size: as bench molds, floor molds, or pit molds. Bench molds are those small and light enough to be handled by one man; most of the molds required in Navy work will be of this type. A mold that is too large for one man to handle is usually constructed on the foundry floor. Pit molds are used when the size of the casting requires a mold constructed in a large pit in the foundry floor. A Navy Molder will rarely, if ever, construct a pit mold.

SPECIAL MOLDING PROCESSES

The previously mentioned molding methods are the methods and processes most commonly used in the Navy. However, several other methods of producing castings are available to the foundryman: Lost Wax, shell, plaster, permanent, precision investment, centrifugal, and slush molding. A brief description of these special processes is given in the following sections.

Lost Wax Process

One of the oldest and most fascinating methods of casting metals is the CIRE PERDU or Lost Wax Process. The Lost Wax Process was used by the ancients in the casting of statuary bronzes. Castings have been found that were molded and cast before 3000 B.C. Even today, to the average person, including a vast army of foundrymen (Patternmakers and Molders), the entire process is wrapped in mystery.

Basically, the process involves making a wax pattern or model over which a semiplastic or plastic refractory clay is poured or worked about the pattern. The refractory clay (mold) is allowed to dry and harden after which it is baked. During the baking, the wax melts and runs out of the mold, leaving a cavity to be filled by the metal being cast, duplicating the fine detail left by the wax pattern. The mold is provided with an aperture or gates for the removal of the melted wax and for pouring of the molten metal. Small holes or mold vents are also provided to release any trapped gases during the pouring of the metal.

Because of the melting of the wax (destruction of the pattern) in the evolution of making the mold, the Lost Wax Process is slow and very expensive. However, the basic principles of the Lost Wax Process are used in the manufacture of castings by the precision investment method.

Shell Molding

Shell molding is a sand molding process consisting of the direct application of heated metal patterns and thermosetting plastics. This process takes advantage of the thermosetting properties of the phenolic resins to bind the fine silica grains of sand in the construction of a mold. The shell molding technique is used for making castings in a mold that is merely a shell of sand varying in thickness from 1/8 to 3/16 inch, depending upon the weight and size of the casting.

Some of the advantages of shell molding are:

1. Better casting quality.
2. Closer tolerances.
3. Minimized burn-in, resulting in cleaner castings.
4. Better as-cast surface finish.
5. Sounder castings.
6. Minimized locked-in stresses.
7. More castings per ton of metal poured.
8. Greater machinability.
9. Greater pickup of detail.
10. Thinner sections may be poured.
11. Need for chaplets is reduced.
12. Lightness of molds results in lower mold cost.
13. Less sand handling, resulting in cleaner working conditions.

Plaster Mold Casting

Plaster molding is a definite refinement of the sand casting method of producing castings. The patterns used for this process are not subjected to the abrasion action of the mold material as in sand molding. In contrast to other methods of casting metals, plaster molding uses an investment material such as gypsum (plaster of paris) to provide the controlling factors for liquid metal poured into molds that are properly treated with water and dried. To the mold investment material various other ingredients, such as talc, asbestos fiber, silica sand, or silica flour have been added to obtain the required mold properties.

When properly employed, plaster molding produces a mold that will result in a casting with a smooth casting surface, free from holes, surface marks, and other casting defects. In addition, this method makes possible the exact duplication of the fine detail of the pattern.

The plaster mold is made by placing a suitable frame (flask) over the pattern and pouring the prepared liquid investment (slurry) into the frame. When the investment sets (hardens), the pattern is removed from the mold and processed by heating to dehydrate the finished mold. The parts of the mold (cope, drag, cores, etc.), are then assembled and poured.

Due to the insulating characteristics of the dehydrated mold, a lower pouring temperature than is required for the sand casting method, may be used without danger of premature solidification (freezing) of the casting.

Permanent Mold Casting

The term "permanent mold" is somewhat of an incorrect designation, as there is no truly permanent mold. However, the term is applied to that type of foundry mold made of metal or a refractory material capable of being used to produce a large number of castings. Castings made from permanent molds are somewhat finer in grain structure than those cast by the sand casting method due to the more rapid solidification of the metal. Therefore, machining of small castings made from permanent molds may be eliminated because of better surface conditions of the metal.

Erosion of the metal mold caused by high pouring temperature is the limiting factor in determining the life expectancy of the permanent mold. Therefore, the first consideration in the mold construction is the proper selection of the best material at the most economical cost. Cast iron, steel, brass, and bronze are the materials used in metal molds. (Cast iron is the most commonly used.)

Other factors to be considered for the life expectancy of the mold depend on the characteristics of the metal being cast, the mold design, mold construction, and the basic design of the finished casting.

Precision Investment Casting

Precision investment casting is a modern version of the Lost Wax Process where the wax pattern is embedded in an investment of silica sand instead of refractory clay.

The process begins with the preparation of one or more patterns which are made oversize to compensate for the shrinkage upon solidification of the metal in the manufacture of a metal mold. The mold is finished and used to produce the required number of wax patterns. From the wax patterns (pattern, sprue, runner, and gates attached), a silica sand investment mold is made.

When the investment hardens, the mold is inverted and heated to melt out the wax pattern, thus producing a mold cavity having the exact shape and size of the pattern.

Centrifugal Casting

In centrifugal casting, liquid metal is poured into a rotating mold (either sand-lined or carbon or permanent). The speed of the rotating mold is limited and controlled by the size and weight of the casting. While the mold is rotating, a centrifugal force of 75 times the force of gravity is produced to force the molten metal against the mold wall and hold it there until freezing (solidification) of the metal.

The pressure created by the centrifugal force, produces desirable characteristics in the casting, such as: greater density, freedom from gases, and freedom from inclusions.

Castings produced by the centrifugal casting method have a better surface finish and require less machining on the outer surface than sand castings. However, they require more machining on the inner surfaces due to the lightness of the impurities in the molten metal; the impurities are forced to the inside of the mold by the greater centrifugal force of the heavier metal.

Centrifugal castings have a finer grain structure and better mechanical properties than ordinary sand castings. In addition, it is possible to produce thinner walled castings (such as cylinder liners, piston rings, engine cylinder barrels, and pipe) than by any other casting process. The thickness of the casting depends only upon the amount of molten metal that is introduced into the mold.

Slush Casting

Slush castings of a small nature are made by utilizing sand or metal molds to produce thin walled castings primarily for ornamental or statuary work. In this process, the metal is allowed to cool long enough to form a shell. As soon as the desired thickness of the shell is obtained, the mold is inverted and the remaining liquid metal is poured out, leaving a hollow center in the casting. This casting process is used only for castings of the lead and zinc alloys.

BASIC DESIGN OF CASTINGS

Although the Molders in the lower petty officer grades have little to do with the design of a casting, the relationship between design and the production of a sound usable casting should be understood by all foundrymen. This is particularly true because the design of the casting has much to do with the internal structure obtained and the strength and soundness of the final product. Foundrymen may sometimes produce sound castings even though the principles of good casting design are violated. However, consistent results are unlikely unless sound design principles are used.

As previously mentioned, the Patternmaker's major goal is the production of precision patterns that will enable the Molder to make sound usable castings. The Molder's goal is to construct a mold capable of producing a sound casting from the pattern which the Patternmaker has made. However, many of your jobs as a Molder will involve working from blueprints which give you a great deal of information in concise form. Blueprints give you the name of the part, the material to be used, the number of castings required, the kind of finish, and heat treatment data, as well as the size and shape of the object. Yet, a lot of important information needed to produce the casting is not shown on the drawing. Usually, no information is given on how the pattern should be constructed or how the part should be molded. These details are left to the craftsmanship of both the Molder and the Patternmaker. It is therefore important that the Molder and the Patternmaker confer with one another in making the decision for the most economical method of producing the casting. In a few instances, however, when a certain special result is required, the molding method or the molding position may be specified on the drawing.

When the design of the part is complicated, it is often difficult to visualize the casting from the blueprint. Under these circumstances it is helpful to have the Patternmaker construct a model, either to scale or full size; the use of a model will help eliminate the possibility of error in visualization. With a model, the Molder can better visualize how the metal will enter the mold and how it will solidify. In addition, the model will help you to decide how the casting is to be molded, and to see more clearly the problems involved.

All patterns must be well planned, designed, and constructed to enable the Molder to produce sound castings. Normally, design of a casting is the responsibility of a design engineer. Occasionally, the Molder, in cooperation with the Patternmaker, may be called on to design or create a new part or to redesign an old part that has prematurely and repeatedly failed in service. Therefore, it is your responsibility to know the sound, basic rules of design so that the casting will have the required strength and function properties that are necessary. A knowledge of the principles that are fundamental to producing sound castings will help you as a Molder Third Class or a Molder Second Class in the production of a sound usable casting.

BACKGROUND FOR DESIGN

Molten metal solidifies in the mold as a gradually thickening envelope or skin. The rapidity of this solidification is governed primarily by the relation between the section mass, mold surface area, and the solidification range of the metal. Obviously, other things being equal, the thinner sections will solidify before the thicker ones.

During solidification of the metal, a pronounced contraction takes place. This means that additional metal, more than that required for the initial filling of the mold cavity, must be supplied or fed to the solidifying casting to ensure internal soundness. This additional metal, stored in the risers, must remain liquid until the casting has solidified. It is important that the casting sections be proportioned and positioned so that the sections most distant from the risers solidify first. Subsequent solidification then progresses toward the risered section where the hottest metal is located.

While solidifying, the cast metal takes on an increasingly rigid form. The solidification is accompanied by contraction. The pattern's shrinkage allowance must compensate for this contraction or castings will not be the desired size. This contraction in the cast metal is opposed by the mold, and often by parts of the casting itself because of its irregular shape. This is likely to result in severe contraction stresses; and castings then must be heat-treated. The different cooling rates of thin and heavy sections result in the cooling and severe contraction of the thin sections prior to the complete solidification of the heavy sections. This results in stressing the partially solidified, and still very weak, heavy section.

Besides solidification, the crystal structure of metals requires consideration from the designer. Most metals solidify by the formation and growth of crystals. The relative size of the crystals is determined largely by the time consumed in solidifying and cooling in the mold. As this time is greater for heavy sections, the crystalline structure of a heavy section is correspondingly coarser than that of the lighter sections. In steel, coarse crystallization means lower physical properties. With the nonferrous metals, a separation of the lower melting point constituents is likely to occur.

In designing a casting, follow the specific design rules as much as possible. Simplify the design wherever you can. Simple designs reduce the patternmaking and molding costs. If a complicated design is unavoidable, check the possibility of making the part in sections which later can be bolted, riveted, or welded together. If possible, avoid using loose pieces, deep pockets, or closer dimensional tolerances than necessary, in the pattern. Do not let the simplicity of shape fool you, though. Frequently, those parts having what appear to be simple shapes present the most difficult feeding problems. For example, a brick-shaped object is one of the most difficult shapes to cast with complete internal soundness. Large, flat-plate castings or thin walled cylinders also look simple but pose some very difficult molding problems.

SPECIFIC DESIGN RULES

There are several specific rules to follow in designing a casting. One rule is to avoid sharp angles by using gradual contours. The shape of the casting section affects the metal structure. Rounded corners are advantageous in the formation of the crystal grains.

A design must also provide for the shrinkage which occurs in metals when they change from a liquid to a solid state. The parts must increase in thickness progressively to points where risers will provide the metal needed to offset the metal shrinkage. A riser cannot feed a section of uniform thickness for a distance greater than approximately 4 1/2 times the section thickness. Therefore, it is important that casting sections having considerable length, but not accessible for risering, be tapered rather than uniform in cross section. Further, the larger portion of the section should be near the riser.

Castings should be designed so that large differences in cross sections do not exist. The various sections should be as uniform as possible. But at the same time, the length of uniform sections must not exceed the ability of the riser to feed the section. Heavier sections should be tapered into the lighter one gradually, never abruptly.

A minimum casting thickness must be maintained. The minimum cross-section thickness through which a molten metal will normally flow is indicated in the following guide:

	Inch
Aluminum	1/8
Brass and bronze	3/32
Cast iron	1/8
Steel	3/16

The sections should be no thicker than necessary, but should be sufficiently thick to permit the proper running of the metal in the mold.

In designing adjoining sections, there are a few rules to follow. Sharp corners should be curved to avoid heat and stress concentration. Intersecting members of equal cross-sectional thickness do not create a molding problem if the joint location can be directly fed by a riser. All too frequently, though, it is impossible to feed these members directly. One way to avoid an area of excessive mass and at the same time obtain a more uniform section thickness is to stagger the intersecting members. Stagger the cross members or ribs, and eliminate sharp corners at adjoining sections. Do not bring more than three sections together, because shrinkage and porosity troubles occur most frequently at member junctions. If the gradual blending of the sections is not possible, use fillets at the junctions.

Use fillets at all sharp angles, especially at inside corners, to make the corners more moldable and to eliminate a plane of weakness resulting from a peculiar type of grain growth which occurs at sharp internal angles. The arrangement of the grain growth (crystals) is so that the lines of strength are perpendicular to the face of the casting. The size of the fillet depends on several factors: the kind of metal, the thickness of the wall section, and the shape and size of the casting. Large fillets produce nonuniform metal thickness and tend to cause nonuniform cooling, resulting in a weak casting. Fillets that are too large are just as bad as none at all. A good rule is to make the radius of the fillet one-half to one-third the size of the mean cross-sectional thickness of the sections joined.

Bosses and pads should not be included in the casting design unless absolutely necessary. They increase the metal's thickness and create hot spots which may lead to improper solidification and to coarse grain structure. If bosses and pads are used, they should be blended into the casting by tapering or flattening the fillets. If several pads are required for one surface, they should be joined as a panel of uniform thickness.

If possible, design a casting so the surfaces to be machined are cast in the drag section of the mold. If such surfaces must be cast in the cope section, an extra allowance for the finish must be included on the pattern.

In addition to bosses and pads, you may be confronted with the problem of designing ribs. The primary use of ribs is to reinforce the casting without increasing overall wall thickness. Properly designed ribs also reduce the tendency of large flat areas to distort.

For maximum effectiveness, ribs must not be too shallow in depth nor too widely spaced. Ribs should also be rounded at the edges, correctly filleted, and not more than 80 percent of the casting thickness. When a reentrant angle–an angle having toes projecting inwardly–is to be made with ribbed strengtheners, casting difficulties may be eliminated by using cores to provide holes in the ribs. In this way, the sectional mass of metal may be reduced at the juncture of the rib and the angle, thus contributing to proper metal solidification. This background in casting design and foundry principles should enable you to select the type of pattern equipment most suitable for each specific job.

CHAPTER 3

MOLDER'S TOOLS

In a broad sense, all equipment that is discussed in this chapter and those chapters immediately following, comprise the tools which the Navy Molder must use to perform his tasks in the foundry. This chapter describes (1) blueprints and sketches, (2) patterns, and (3) the handtools commonly used by the Molder. The following chapter deals with foundry shop equipment. The operation of the various types of furnaces is described in chapter 5; and foundry sands and related materials with which the Molder must work are described in chapter 6.

BLUEPRINTS AND SKETCHES

The design engineer is constantly working on plans for new machines or plans to improve existing machines. Much of his work is accomplished through mathematics and mechanical drafting. Mathematics is used to calculate the strength of the parts and to determine their dimensions. Mechanical drafting is the means by which the shape, dimensions, kind of material, finish, and all other details of the parts are recorded.

It would be almost impossible for the design engineer, using words alone, to convey his ideas, thoughts, calculations, and dimensions to the many users of blueprints in the construction of a new machine. However, through mechanical drafting, it is possible to record in the form of drawings (blueprints), every item of information necessary for the construction of the machine. Mechanical drafting, then, is really a special language and is defined as follows: "A language which uses line, symbols, dimensions, and notations to accurately describe the form, size, kind of material, finish, and the construction of an object." Therefore, blueprints make it possible for you to understand what is wanted. In a comparatively little space, they give a great deal of information in a universal language that everyone may recognize.

A Molder's first reaction to a blueprint is: "Why do I need to know that?" On the one hand, he easily understands that the Patternmaker, Machinery Repairman, Shipfitter, and other repair personnel need the ability to read blueprints. On the other hand, he has a hard time understanding how the Molder rating is concerned with blueprints. "After all," he tells himself, "all I do is ram up what the Patternmaker gives me—reading blueprints and making the pattern is his headache, not mine." The truth of the matter is that blueprints are among the Molder's more important tools. Therefore, he, as well as the Patternmaker, Machinery Repairman, and all other repair department personnel should understand the language in which they are written.

Occasionally, the Patternmaker will design and construct a pattern without consulting the Molder. More frequently, he'll talk it over with the Molder. The Patternmaker will be sure to consult the Molder if there is any doubt as to the best way to part, or otherwise, construct, the pattern so that it can be withdrawn easily from the molding sand. How does that effect the Molder? Unless he is able to read a blueprint and to visualize the object represented by the various lines, he won't know what the Patternmaker is talking about. The point is that the pattern parting line and pattern construction decisions often depend on blueprint reading.

There are other reasons why the Molder should be able to read blueprints. For example, to understand shop equipment thoroughly, as well as to make adjustments, replacements, and repairs to that equipment, the information presented on the drawings supplied by the manufacturer must be interpreted. Further, at some time or other it may be necessary to make a sweep mold. In this kind of molding, the entire mold is constructed without the benefit of a pattern. That means constructing all portions of the mold directly from the information given on the blueprint. The chief or the leading petty officer in charge of the foundry is more concerned with blueprints than the Molder Striker or a Molder Third Class. However, the time to learn the tricks of the molding trade is when you are advancing through the lower grades, not after assuming the responsibilities of the leading petty officer.

As a Molder 3 or Molder 2, you must not only know how to use the special tools of the Molder rating to the best advantage, but you must know something of how a pattern is made; therefore, you must be able to read and work from blueprints. Every mechanical and spare part depends primarily upon a mechanical drawing. To the person without a knowledge of blueprint reading, the simplest drawing is likely to look like a confusing jumble of lines and dimensions. As a Molder, your first duty, is to learn the meaning of these lines that the design engineer produces, and to be able to recognize the various types of views that are used to present an object in detail. You must learn to distinguish an outline from a hidden line, an extension line from a dimension line, or a cutting plane line from a section line.

The fundamentals of blueprint reading are presented in the Basic Navy Training Course, Blueprint Reading and Sketching, NavPers 10077-B. In this text you will find described the way a blueprint conveys to the reader the necessary information on sections, lines, dimensions, and allowances. You will learn how to interpret the data that is supplied in the title block of a blueprint. You will find a discussion of how templates are made and used; and you will also find helpful instructions on how to produce technical sketches.

In addition to the ability to read and interpret blueprints correctly and to visualize the size and shape of an object in all its proportions and in its fine details, you must be able to see beyond the blueprint and to visualize a pattern or a mold which very often will not look even remotely like what you see on the blueprint.

The act of forming a mental image of an object described on a flat plane into a three-dimensional shape, is called visualization. In other words, visualization is the act of recognizing the shape of a three-dimensional object when all you have to go by is a flat drawing.

Some people find it easy to visualize three-dimensional objects from flat drawings; other people find it difficult. The ability to visualize can be greatly developed by continued practice. Before you can even practice visualization, you must of course be able to read and write the language of blueprints and drawings. Then, through constant practice, you can develop a creative imagination that will enable you to visualize three-dimensional shapes from flat drawings and enable you to discuss intelligently with the Patternmaker the partings and other details pertaining to the pattern and core boxes.

PATTERNS

After the design engineer has produced the blueprint, the next step in the production of a mechanism or part is the construction of the pattern. To the Patternmaker, this pattern is accurate, well constructed of a suitable material, designed to conform to foundry requirements and to eliminate many of the more common casting difficulties. But to the Molder, the pattern is only a tool that will lead to the end product, namely, a sound, usable casting.

The average layman, who knows little about foundry practice, misunderstands the meaning of the word "pattern."

A pattern may be defined as a full-size model—made of a suitable material with provisions included for molding, coring, and machining—from which a refractory mold is made. In other words, a pattern is the basis for all foundry practices.

Further study of the definition will provide the following information: The term FULL-SIZE MODEL is used to distinguish a pattern from a scale or sub-size object used to convey an idea from a thought. The term SUITABLE MATERIAL is used to distinguish the material from which a pattern is constructed to provide the maximum wear qualities for the number of castings to be produced. The term PROVISIONS FOR MOLDING AND CORING includes such items as: (1) proper shrinkage allowance to compensate for the contraction in the solidification of the molten metal, (2) proper draft on pattern surfaces that is necessary for the withdrawal of the pattern from the mold, and (3) the provision of ample projections or core prints of sufficient bearing surface and size and shape to form impressions in the mold cavity to support and locate the necessary cores to form the interior or exterior of the casting. The term PROVISION FOR MACHINING includes the extra stock and machining lugs necessary for machine setup on the pattern to permit machining the casting to accurate dimensions or to a smooth surface.

Patterns and pattern equipment is a general term used to refer to the great variety of types of patterns required in foundry practice. The material used and the manner in which a pattern is made depends not only on the size and shape of the pattern, but also on the number of castings to be produced from the pattern. Although several different materials are used to construct patterms and pattern equipment, all patterns are manufactured as temporary, medium, or standard grades and may be classified for convenience as follows: loose patterns, single patterns, gated patterns, match plates and matchboards, cope and drag patterns, and special equipment.

A TEMPORARY GRADE pattern is a pattern used to produce only one or two castings and therefore made as cheaply as possible. A MEDIUM GRADE pattern is a pattern used occasionally and may be made cheaper than a standard grade pattern. A STANDARD GRADE pattern is a pattern in daily use or used at frequent intervals and will require only minimum repairs.

Since patterns are used as tools by the Molder to make molds, which in turn are used to produce castings, mold design must be considered before the pattern is constructed by the Patternmaker. A casting can usually be produced with any of several types of pattern equipment. Therefore, as a Molder 3 or Molder 2 you should be familiar with the general characteristics of each type, and the circumstances in which one type of equipment rather than the others offers the best advantage.

To further understand the definition of a pattern, (pattern equipment) the following section gives the comparison of the advantages and disadvantages of the various types and kinds of patterns necessary for the complexity and size and shape of the casting to be produced.

TYPES AND KINDS OF PATTERNS

Although the number of castings required from a pattern will determine the TYPE of pattern to be constructed by the Patternmaker, the KIND of pattern will specify the construction and molding procedures. The type of pattern used is to facilitate a certain molding problem and is not related to the number of pieces that enter into the construction of the pattern. The kind of pattern is related to the grade and future use of the pattern.

Loose Patterns

Under the broad classification of loose patterns are the ONE-PIECE patterns and the ONE-PIECE BUILT-UP patterns. A one-piece pattern is a solid pattern but is not necessarily made from one piece of wood. A one-piece built-up pattern is a pattern that is not necessarily made from one piece of wood; it can be a series of pieces formed to make a certain shape, but the pattern will be in one piece.

The solid SINGLE LOOSE pattern is of greatest use when only a few castings are to be made. This is a relatively simple and cheap pattern because of its shape and size. Figure 3-1 illustrates two different styles of solid single loose patterns. Part A of figure 3-1 shows a simple pattern with single draft and a straight parting line. This type or style of pattern is molded as a flat-back (the pattern having one flat surface for ease in molding) and has the least chance of tearing the molding sand on the edges of the mold

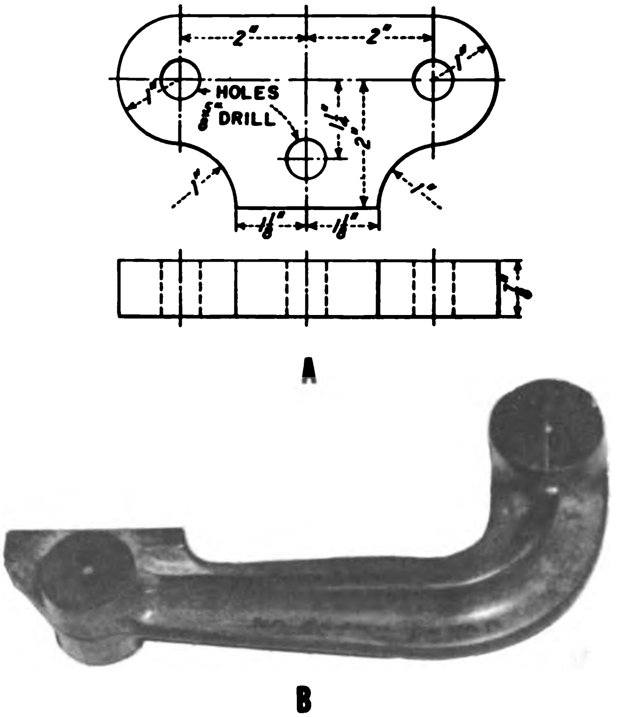

23.27J

Figure 3-1.—Solid, loose pattern.

cavity when the pattern is withdrawn. Part B of figure 3-1 shows a solid single pattern with ribs and bosses on both the cope and drag surfaces and with double draft. Double draft is the term used when the draft on the pattern goes in opposite directions from the parting line. This type or style of pattern requires coping down of the parting plane of the drag half of the mold to establish the correct parting line for the pattern. Thus, in effect, to make a mold of the pattern shown in part B of figure 3-1 would require an extra step in the construction of the mold. The cost of molding and the risk of casting failure are increased since the pattern must be molded as a unit. The major molding difficulty is lifting off the cope (top) of the flask without rapping the pattern and without having the cope sand stick or drop out. To avoid this difficulty and to simplify the molding process, a single PARTED (split) pattern is used. (See fig. 3-2.) A parted pattern has cope and drag halves which are parted horizontally through the centerline.

From the Molder's point of view, ramming a single loose and single parted pattern is time consuming since it requires the maximum number of hand molding operations. Often the time required to cut gates and risers by hand equals the time required to make the mold itself. When a number of castings are made from a single loose pattern, the quality of the castings produced varies because the size and shape of the gates and risers differ from mold to mold. This difficulty is most apparent when the Molder's skill is not developed sufficiently to exactly duplicate the desired gating system from one mold to the next.

The GATED pattern represents a step in the direction of quality control. It may be a single or multiple loose pattern as shown in figure 3-3. A gated pattern reduces the overall molding time by having permanently attached gates which serve to hold the several parts in their proper relationship to each other within the flask. A gated pattern cuts down the number of molding operations, eliminates the variation in the sizes of the gates, and increases production of castings of uniform quality. Although the gates and risers are attached to the pattern proper, the designs for the gates and risers are the responsibility of the Molder. In other words, when using gated patterns, the design of the gating system requires close cooperation between the Patternmaker and the Molder.

Mounted Patterns

MATCHBOARD or MATCH PLATE equipment is indispensable where a large number of small castings are required. Even though the number to be produced on a single job order is not unusually large (say 50 to 100), a matchboard may be used if the part is one that is likely to be called for repeatedly. A typical matchboard is illustrated in figure 3-4. The patterns for the individual castings as shown in figure 3-4 usually are made up as single parted patterns and mounted with the complete gating

23.67.1

Figure 3-2.—Parted (split) pattern.

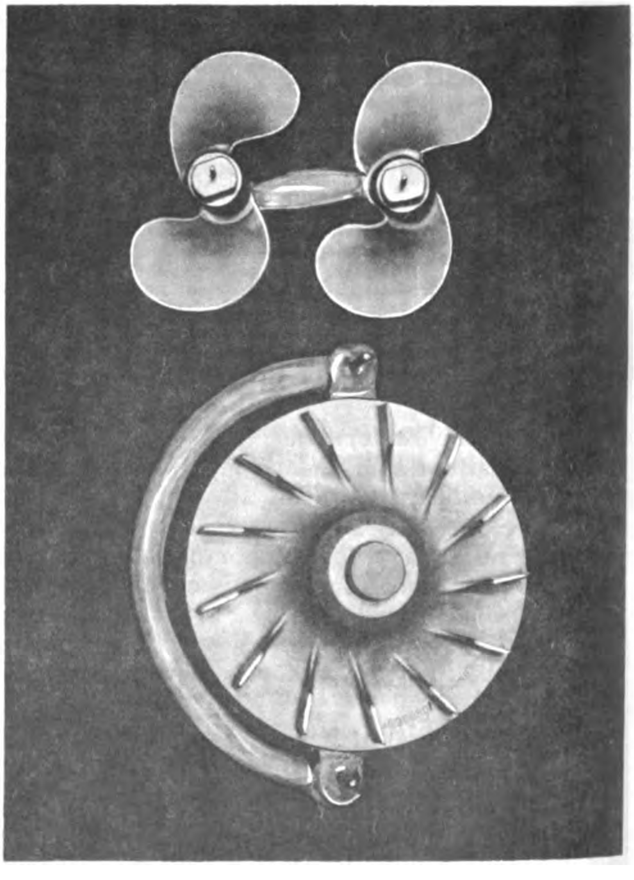

18.13X

Figure 3-3.—Gated patterns.

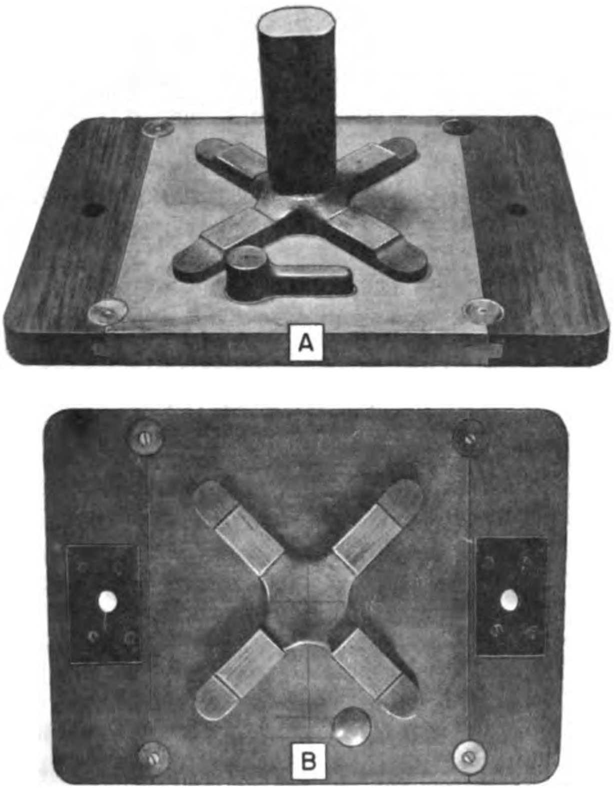

18.14

Figure 3-4.—Matchboard: A. Cope side. B. Drag side.

system on the matchboard with brads or woodscrews.

Although the advantages of molding with matchboards are fully realized in the production foundry, the Navy Molder can also benefit through their use in the bench molding. Using matchboards and match plates increases the Molder's efficiency by eliminating nearly all hand molding operations, produces castings of uniform quality, and increases yield by reducing the amount of scrap in the form of rejected castings.

COPE and DRAG pattern equipment is in many respects similar to a matchboard or match plate. The principle difference is that the drag portion of the pattern is mounted on one plate, while the cope portion is mounted on another. (See fig. 3-5.) Cope and drag equipment is usually used for patterns that are too large for conventional matchboards or match plates. This type of pattern equipment produces a dimensionally accurate mold with a minimum of hand molding operations. A further advantage of cope and drag equipment in production work is that two Molders can work separately on the job—one molds copes, while the other molds drags. In Navy foundries, cope and drag pattern equipment is seldom used because the volume of production is not sufficient to justify the cost of the manufacture of the necessary patterns.

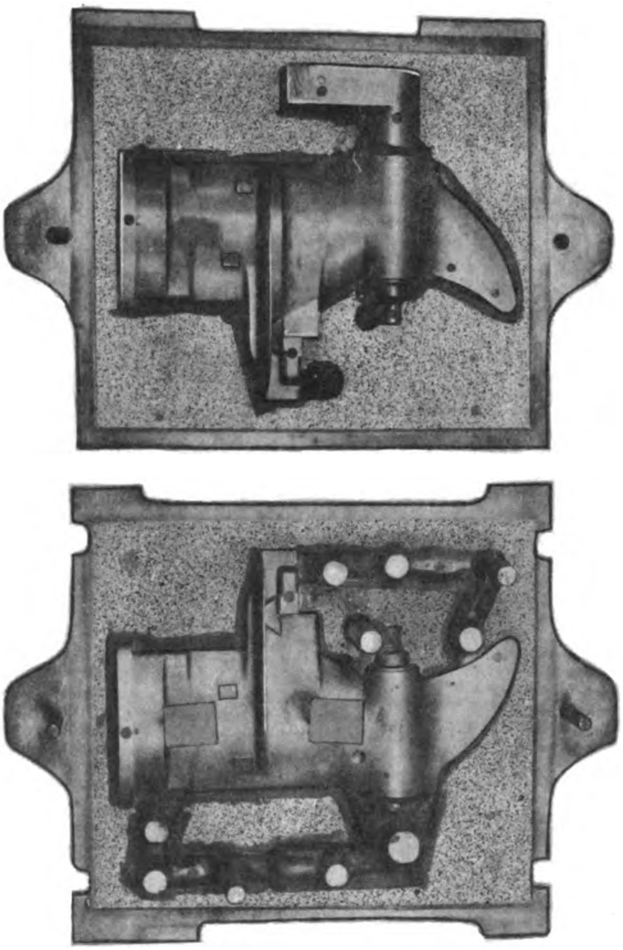

18.15X

Figure 3-5.—Cope and drag pattern equipment.

SPECIAL PATTERN EQUIPMENT

Special pattern equipment is a catch-all category including follow boards, ram-up blocks, sweeps, and skeleton patterns. Of these, the most frequently useful device is the follow board. It has two main applications: to aid in the molding of irregular parted patterns, and to mold patterns that would be too fragile. A typical follow board is illustrated in figure 3-6. The follow board shown is essentially a special molding board into which a recess has been cut

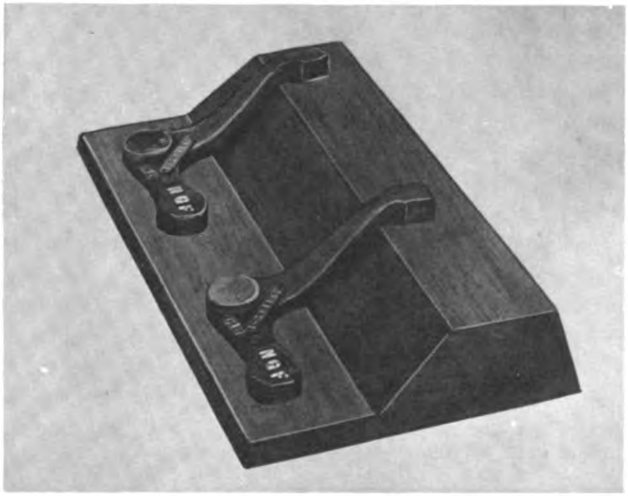

23.64

Figure 3-6.—Using a follow board to obtain an irregular parting line.

to fit the parting line of the pattern. Its use is the same as that of a regular molding board. The name stems from the fact that the board is made for a particular pattern and FOLLOWS that pattern around during the drag's rollover. Patterns having an irregular parting often may be molded with greater ease and accuracy with a follow board constructed so that its surface matches the pattern's parting line. (See fig. 3-7.)

RAM-UP BLOCKS are special devices which support and prevent thin-shelled patterns from springing or breaking during the ramming up of the mold. The ram-up block must accurately fit the portion of the pattern that it is to support. For the symmetrical pattern shown in cross section in figure 3-8, a wood block may be turned on the lathe. The ram-up block may be made as a loose auxiliary part or may be fastened to the molding board, depending upon the preference of the Molder.

Although the ram-up block shown in figure 3-8 is intended to serve as a pattern protecting and supporting device, it also serves as a follow board. Sometimes it is difficult to distinguish between a matchboard, a ram-up block, and a follow board. In making a distinction where a device serves more than one purpose, classify it according to its PRINCIPAL FUNCTION.

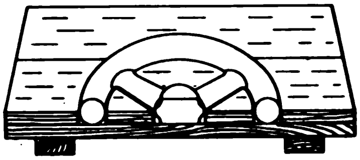

18.16

Figure 3-7.—Follow board.

SKELETON patterns are a simple framework affair designed to help the molder make the mold. They are especially useful in the production of very large hollow or shell-like castings, such as large pipes, elbows, or special housings. Usually the Patternmaker provides the Molder with pattern equipment (sweeps or strickles) with the edges cut to the cross-sectional shape of the casting to be made. The skeleton pattern technique may also be used in making large cores. Figure 3-9 illustrates the skeleton construction of a core box and the accompanying sweep made by the Patternmaker.

Almost any reasonable shape and metal thickness can be swept with the proper shaped strickles and sweeps. However, the sweep technique is an economical procedure only when one or two castings having a relatively simple shape are required. When the shape is complex, sweeping is impractical. If more than a few castings are required, even a simple shape can be produced more efficiently with a pattern.

If the casting is symmetrical, such as the casting for a bell, the sweep is mounted on an upright spindle. The Molder centers the upright spindle in a bed of packed molding sand and forms the mold cavity by rotating the sweep through the bed of sand until the desired mold shape is formed. (See fig. 3-10.)

The PART pattern is another type of pattern that is also applicable to circular work. A part pattern is actually only a portion of a pattern so constructed that the Molder can form the completed mold in stages, moving the part pattern from section to section in the mold. Marine propeller patterns are often made as part patterns. The pattern is constructed with only one

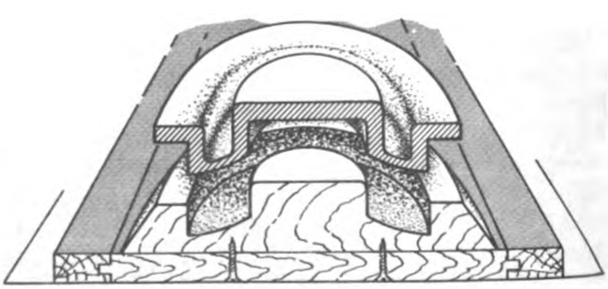

18.17

Figure 3-8.—Ram-up block.

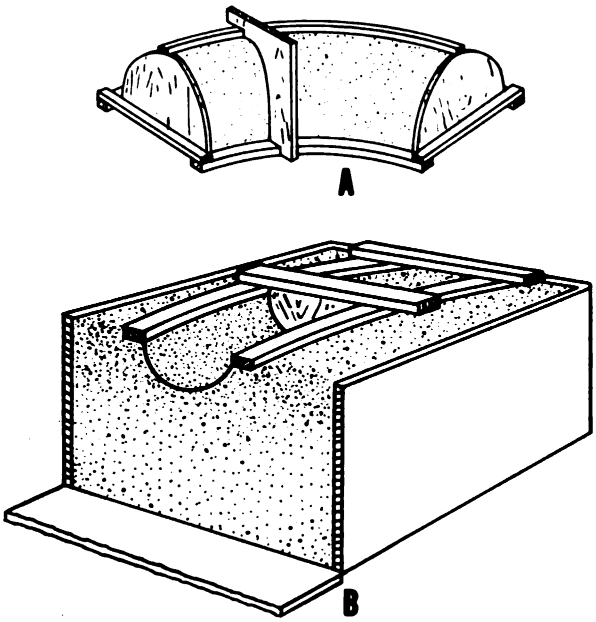

18.19X

Figure 3-9.—Skeleton patterns and sweep.

blade and the entire hub or one blade and the corresponding section of the hub. Appropriate jigs or vertical spindles are necessary to hold the part pattern in perfect alignment during the molding procedures.

The Molder mounts the hub of the propeller pattern on a vertical spindle in the center of a bed of molding sand in a large flask. He then rams the mold for the single blade and hub and rotates the part pattern about the spindle to get the pattern in the correct position for molding of the second blade of the propeller. If a four-bladed propeller is required, the Molder will rotate the pattern 90° about the spindle. If a three-bladed propeller is required, he will rotate the pattern 120° about the spindle. Thus, using a part pattern of a single blade and hub and appropriate fixtures or jigs, the Molder may cast a propeller with the required number of blades.

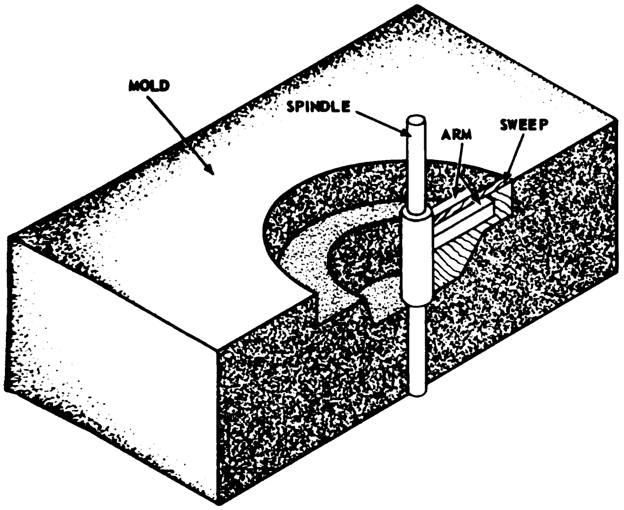

68.62

Figure 3-10.—Forming a mold with spindle and sweep.

PART CORES are used in the same manner as part patterns, especially where long cores of the same cross section are required. Part cores are especially useful in making cores for long lengths of pipe. Instead of making one very long core box, the Patternmaker will make a shortened core box. The Molder then rams up a sufficient number of short cores and pastes them end to end to give the required length.

Patterns with LOOSE PIECES do not actually comprise a separate classification of types of pattern equipment. They are brought in at this point because they are closely related to the solution of some of the molding problems under discussion.

Many patterns are of such shape that projecting elements (bosses, undercuts, and flanges) which are above or below the parting line of the pattern form backdraft to the line of withdrawal of the pattern from the mold. These projecting elements cannot be withdrawn at the same time as the main body of the pattern. This common problem can be solved through the use of loose pieces and drawbacks.

A loose piece is defined as a pattern part that remains in the mold while the main body of the pattern is withdrawn. The loose piece is carefully drawn from the mold wall into the main mold cavity, then lifted from the mold. (See fig. 3-11.) This is called "picking-in." It is good foundry practice for the Molder to immediately replace the loose pieces on the pattern to make sure that all the loose pieces have been picked out of the mold cavity.

The function of the DRAWBACK is similar to that of a loose piece. Instead of being a pattern part, however, the drawback is a special kind of green sand core, rammed up into the mold on a supporting structure so that it may be drawn back and lifted away to clear an overhanging portion of the pattern, thus permitting pattern removal. (See fig. 3-12.) After the pattern has been withdrawn from the mold, the drawback is relocated in the mold. The mold face contour of

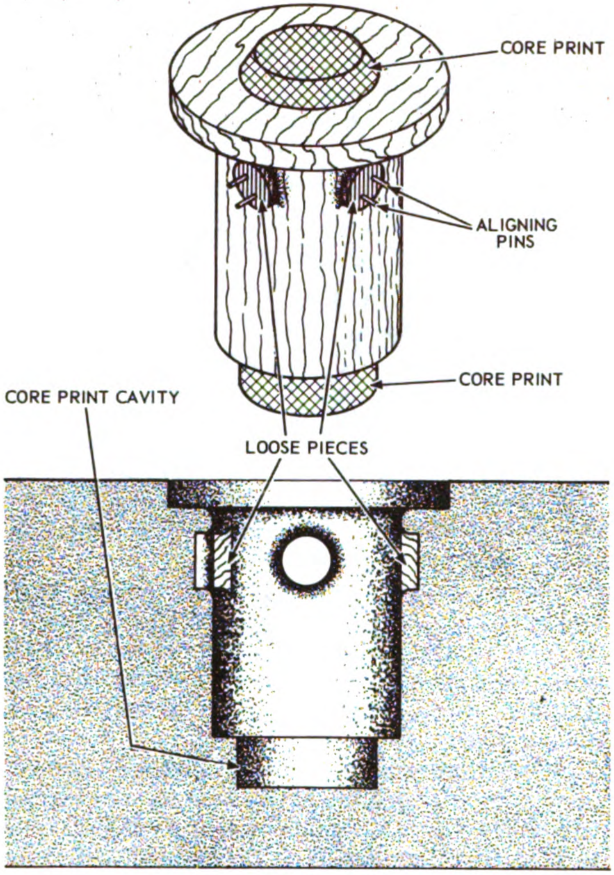

18.22

Figure 3-11.—Pattern with loose pieces.

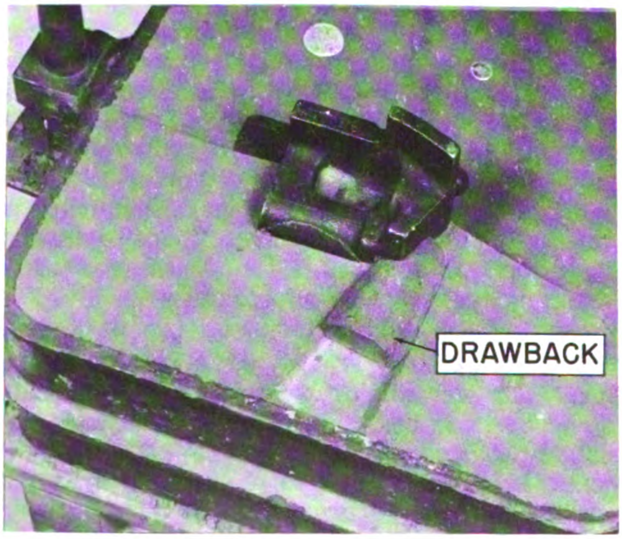

18.22.1

Figure 3-12.—A drawback.

the drawback is formed by the pattern itself rather than by a core box.

Although CORE BOXES may be classified as special pattern equipment, they actually are part of the pattern made for a particular job. Therefore, core boxes should be treated as patterns. A description of cores and core boxes and their uses is presented in chapter 8 of this training course.

PATTERN ALLOWANCES

A pattern must embody certain allowances if it is to satisfactorily play its part in the finished product. For example, a pattern must provide shrinkage (contraction) allowance and distortion allowance during the casting's solidification; it must possess sufficient draft to enable the pattern to be withdrawn from the mold; it must allow for machine finishing, and it must provide machining lugs for machine setup in the machining process for the finished casting.

Shrinkage and Contraction

As the metal "freezes" or changes from a liquid to a solid state, shrinkage and contraction take place. In common terminology, shrinkage and contraction describe the total volume change. Although shrinkage and contraction are part of the same process that accounts for the decrease in the size and volume of metal while it is cooling, many foundrymen think of these two actions as two distinct processes.

Shrinkage is believed to be the loss brought about by the rearrangement of the molecular structure of the metal as it passes from a liquid to a solid state. The Molder compensates for shrinkage by providing risers or reservoirs which supply extra metal where it is needed to make up for the decrease in volume that results from metal cooling from the liquid to the solid state.

Contraction is believed to occur immediately after shrinkage, and as the metal cools to room temperature after solidification has taken place. The Patternmaker provides for dimensional contraction or the decrease in volume in the solid state, by constructing the pattern slightly oversize with the appropriate shrinkage (contraction) rule for the particular metal to be cast. In other words, the Molder thinks of shrinkage and contraction in the liquid state while the Patternmaker thinks of it in the solid state.

The shrinkages of metals have been determined by experimentation and converted into tables. These shrinkage tables are intended merely as guides because each specific job may require minor deviations. The average shrinkage allowances of metals that are common to Navy use are listed in table 3-1.

The amount of shrinkage varies with the casting design, type of metal, pouring temperature, mold method, mold material, and the resistance of the mold to shrinkage. However, shrinkage does not occur uniformly in all directions. Therefore, the experience of the Patternmaker and the Molder provides the basis for using any modified shrinkage tables.

Distortion

Uniform shrinkage may or may not follow a given shrinkage allowance in all instances. Certain conditions affecting shrinkage must be considered by the Patternmaker when making the pattern, to ensure a sound casting. Among these conditions is mold resistance which may be caused by tight ramming, hard cores, ribs, gates, risers, or other projections, Mold resistance will cause uneven shrinkage, resulting in distortion of the casting. Therefore, distortion allowances must be incorporated in the pattern to prevent twisting or warping of the casting due to the internal stresses set up within the casting during solidification.

In examining the casting's basic design for areas where distortion may occur, the considerations to remember are: (1) contraction follows the lines of metal structure; (2) distortion results when contraction is unequal; and (3) distortion does not occur when the lines of contraction meet at a junction of members because neither member is affected by the other. Inasmuch as there may be shrinkage without distortion but not distortion without shrinkage, it can be said that distortion comes from unequal shrinkage.

Since the shrinkage allowances used in the construction of a pattern are based on experimentation and experience, they should be used for the general run of jobs. It should be remembered that the shrinkage allowances assume normal unrestricted contractions. When the casting's design is such that normal shrinkage does not occur, or is partially restrained in a portion of the casting, it may be necessary to use a modified value (two or more shrinkage allowances based on the existing conditions) or to have the Patternmaker construct a modified pattern. The cause of abnormal contraction is

Table 3-1.—Average Shrinkage Allowances.

Material	Shrinkage (inches per foot)	Material	Shrinkage (inches per foot)
Aluminum	5/32	Copper	3/16
Bismuth	5/32	Lead	5/16
Brass	3/16	Monel	1/4
Bronze	3/16	Magnesium	1/8 to 5/32
Aluminum Bronze	7/32	Steel	1/4
Manganese Bronze	7/32	Tin	1/4
Cast Iron	1/10 to 1/8	Low Melting Point Alloy	NIL
Cast Iron, Wrought	1/8	Zinc	5/16

usually mold resistance to the forces of contraction. If the mold or core cannot be changed or modified to permit normal contraction, all allowances will have to be incorporated in the pattern.

Usually the dimensional accuracy of most castings is satisfactory when the pattern is made with shrink rule measurements. Occasionally, however, a pattern must be so constructed that it will compensate for any distortion resulting from uneven contraction which cannot be eliminated from the design. This technique is known as FAKING THE PATTERN.

Draft

The angle of slant (taper) tending away from the parting of a pattern given to those surfaces which would lie in the direction in which the pattern or its component parts are drawn from the sand is called DRAFT. Unless draft is provided on the vertical surfaces of the pattern, the pattern cannot be withdrawn from the mold without excessive rapping or damaging the mold wall.

In green sand molding, interior surfaces of patterns require more draft than exterior surfaces. So long as it does not distort the functional lines of the casting, liberal draft should be on the pattern. In any case, the draft on surfaces at right angles to the pattern face (parting line) must not be less than 1°. Usually, this allowance is added to the pattern. In some instances where a reduction in wall thickness is not objectionable or where an increase in dimensions at the face of the pattern (casting) is functionally objectionable, the draft should be subtracted from the casting dimensions specified on the blueprint. Whether added or subtracted, the taper always runs away from the pattern face. If no surfaces are at right angles to the parting line, draft is not necessary.

Machine Finish and Tool Clearance

Two allowances in addition to those already mentioned are frequently required: machine finish and tool clearance allowance. The amount of machine finish allowance depends upon the kind of finish specified for the casting as well as the mold location of the finish area. Whenever possible, surfaces to be machined are located in the drag. When this is impossible, it will be necessary for the pattern to have an extra allowance to take care of any dirt or slag that may come to the cope surface of the casting. The usual machine finish allowances for castings of various sizes and of various metal compositions are indicated in tables 3-2 and 3-3.

Table 3-2.—Machine Finish Allowance Guide.

Casting alloys	Pattern size	Bore, inch	Finish
Cast iron	Up to 12 in	1/8	3/32
	13 to 24 in	3/16	1/8
	25 to 42 in	1/4	3/16
	43 to 60 in	3/16	1/4
Cast steel	Up to 12 in	3/16	1/8
	13 to 24 in	1/4	3/16
	25 to 42 in	5/16	5/16
	43 to 60 in	3/8	3/8
Malleable iron	Up to 6 in	1/16	1/16
	6 to 9 in	3/32	1/16
	9 to 12 in	3/32	3/32
	12 to 24 in	5/32	1/8
	24 to 35 in	3/16	3/16
Brass, bronze, and aluminum alloy castings.	Up to 12 in	3/32	1/16
	13 to 24 in	3/16	1/8
	25 to 36 in	3/16	5/32

Table 3-3.—Machine Finish Allowance (Above The Average Shrinkage Allowance).

Drag (Inches)	Cope (Inches)	Tolerance expected, "as cast" (Inches)
1/8	5/32	±1/16
5/32	3/16	±3/32
3/16	1/4	±1/8
1/4	5/16	±5/32
5/16	7/16	±3/16
3/8 to 1/2	5/8 to 3/4	±1/4

Tool clearance is sometimes formed on a pattern to provide an opening for a tool to enter when you are finishing sections of the casting that are partially or entirely closed. Careful consideration should be given when tool clearance is necessary so as not to weaken the casting.

From the standpoint of the Machinery Repairman the provision of adequate tool clearance is just as important as extra metal for machining. The Molder has little concern with this allowance except as it may relate to the location of gates and risers. At any rate, there must be sufficient space to start and finish the cut.

Machining Lugs

Consideration should be given to ways to facilitate the handling of castings during the machining process. Provisions should be made on the pattern to hold the casting or to prevent distortion of the casting. Therefore, a little extra work on the part of the Patternmaker and the Molder (bosses, lugs, feet for leveling, or a bridge) will often save hours of machine shop time. Generally, these provisions do not appear on the blueprint, but they do appear as projections on the pattern and the casting. Their location, however, will depend on the facilities and the requirements of the machine shop. As a Molder 3 or Molder 2 you should have a working knowledge of the various machine shop tools and the methods of mounting work for machining.

Remember, the addition of machining projections to the pattern increases the metal thickness in the casting, creating hot spots and resulting in a weak casting. When provisions for machining purposes are made, all projections should be treated as a part of the casting as well as being treated as a boss or a pad. (See the basic design rules given in chapter 2 of this training course.)

PATTERN COLOR CODE AND MOLDER'S BLUEPRINT

In order to designate certain parts of the pattern, the practice of painting the patterns various standardized colors have been adapted. The coloring of the various parts of the pattern prevents embarrassing and costly mistakes in the foundry; the Molder can tell at a glance what the molding routine should be. In addition, the coloring is used as an aid in getting all of the pattern parts properly assembled. For example, one color may be used to represent that part of a pattern which, when cast, will be in the "as-cast" condition. Another color may be used to show other parts representing the core prints or projection(s) for the openings of a hollow casting.

One method of standardizing the pattern color code has been prepared and adopted by the American Foundrymen's Society (formerly the American Foundrymen's Association). This color code has been approved and recommended for Navy use by the Bureau of Ships. This color code known as the Standard Color Code—1932 is illustrated in figure 3-13 and is as follows:

1. Black—identifies surfaces to be left unfinished.
2. Red—identifies surfaces to be machined.
3. Alternating red and yellow diagonal stripes—identifies seats of and for loose pieces.
4. Yellow—identifies core prints and seats for loose core prints.
5. Alternating black and yellow diagonal stripes—identifies stop-offs.
6. (Optional)—A white line may be used for the indication of any change in the direction of draft.

This pattern color code has been adopted as standard practice by the Joint Committee on Pattern Standardization, which is sponsored by the American Foundrymen's Society and consists of official representatives from various national organizations. This standard was approved as the American Tentative Standard B-45, 1—1932 by the American Standards Association, and as Commercial Standard CS 19-30 by the Bureau of Standards, U.S. Department of Commerce.

Another method of standardizing the color code is the Tentative Standard Color Code which may be adopted for new patterns. All new patterns should be painted in accordance with the standard practice adopted as of 1958 by the Pattern Colors Committee, Pattern Division, American Foundrymen's Society. This standard, illustrated in figure 3-14 is as follows:

1. Clear coating—identifies unfinished casting surfaces, the faces of core boxes, and the pattern or core box parting faces.
2. Red—identifies surfaces to be machined.
3. Aluminum—identifies seats of and for loose pieces.
4. Black—identifies core prints and seats for loose core prints.
5. Green—identifies stop-offs.

(Optional)—A white line may be used for the indication of any change in the direction of draft.

Places where cores will cut through to the exterior of the casting, as well as the core outline on the joints of parted patterns, are indicated by the same color as are core prints. This practice is known as the MOLDER'S BLUEPRINT. A Molder's blueprint should be included on all patterns as necessary. Painting the parting surfaces in this manner will prevent the possibility of positioning cores end for end and will eliminate other costly mistakes.

SPECIAL MOLDER'S TOOLS

In addition to basic tools used by most craftsmen in the metalworking trades, there are special tools and special instruments employed in the various molding processes. Such tools are designed to facilitate the construction of the sand forms into which hot liquid metal must be poured to produce castings. The Navy Molder must be expert in the use of these tools in order to do his work competently and safely.

HANDTOOLS

The information concerning the Molder's handtools given in this chapter will enable you to recognize the tools when you see them, and know what tool is meant when your leading petty officer refers to one by name. In the later chapters that deal with the foundry processes, you will learn more about the actual use of these tools.

As you learn how to perform the simple foundry processes, you will understand the special uses of the molder's tools, and find that you are reaching automatically for the one that will best serve your purpose. Remember that the handtools described in this chapter are the ones that you will need to perform a sequence of operations that can be briefly stated as follows:

1. Pack the sand around the pattern, ramming it tight.
2. Provide a gateway for the molten metal to reach the mold cavity.
3. Draw out the pattern.
4. Smooth the mold, reforming it where necessary.

Figures 3-15, 3-16, and 3-17 illustrate the tools used (a) to shovel and mix the sand; (b) to pack the sand in the mold cavity, to support the sand and the pattern, and to remove excess amounts of sand; and (c) to provide for the passage of molten metal into the mold cavity, and to provide for the escape of gases.

The tools that are probably the most frequently used in a foundry—certainly the most frequently used by the beginner—are the SHOVEL and the RIDDLE. With the first, you move the sand. With the second, you sift the sand, breaking up the large particles, and removing any foreign matter from the sand itself. Figure 3-15 illustrates a shovel and a hand riddle.

Your shovel differs from the ordinary shovel in having a blade that is flat and square. The flat blade makes it possible for you to let sand slide off the side of the shovel into the mold.

The foundry sieve, or riddle, consists of a wooden rim fitted with a bottom of steel or brass wire mesh. The size of a sieve is expressed in terms of the number of meshes, or square openings, to the square inch. Thus, the higher the mesh number, the smaller will be the openings. A number six or number eight sieve is commonly used, but the smaller numbers are better when you must sift coarse materials.

The gyratory riddle is a device consisting of a portable stand, a frame for a standard 18-inch sieve, and an electric or an air-driven motor. This riddle will prove very useful for preparing certain natural bonded molding sands, and for preparing core sands when a sand muller is not available.

To produce a satisfactory mold, you must take care to tightly pack the sand in which the mold cavity is formed. Some support must be provided for the pattern, and also at the bottom of the mold, to retain the sand in the drag. Flat, smooth boards known as FACE BOARDS are used as a support for the pattern during ramming. BOTTOM BOARDS which may be flat, rough boards or steel plates, are placed on the bottom of the mold. (See fig. 3-16.)

The ramming is done with either a BENCH RAMMER or a FLOOR RAMMER, depending upon the type of job. For bench work, you will probably use the wooden hand rammer; for the larger floor work, you can use the iron floor rammer.

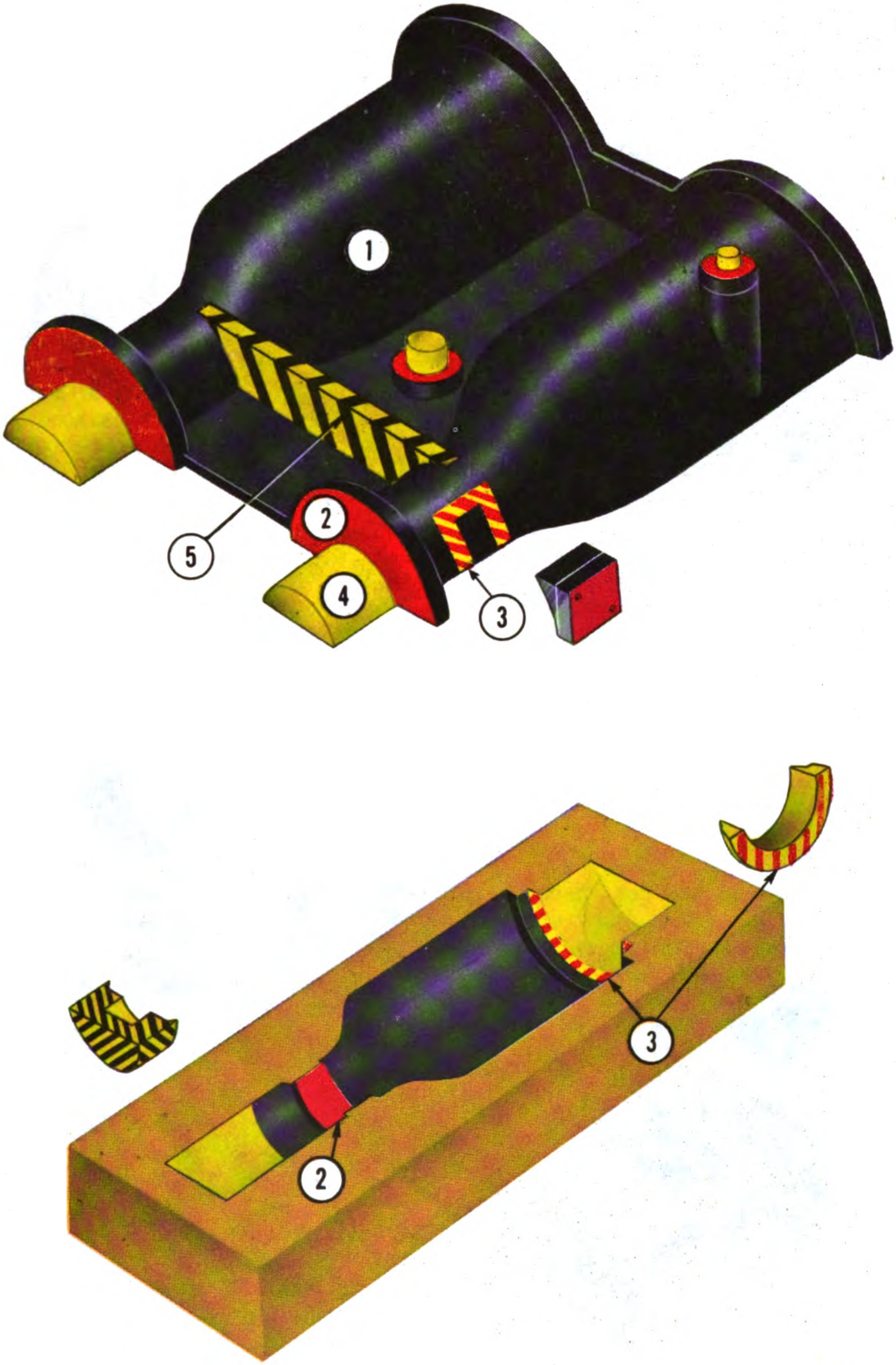

C102.1

Figure 3-13.—Standard Color Code—1932.

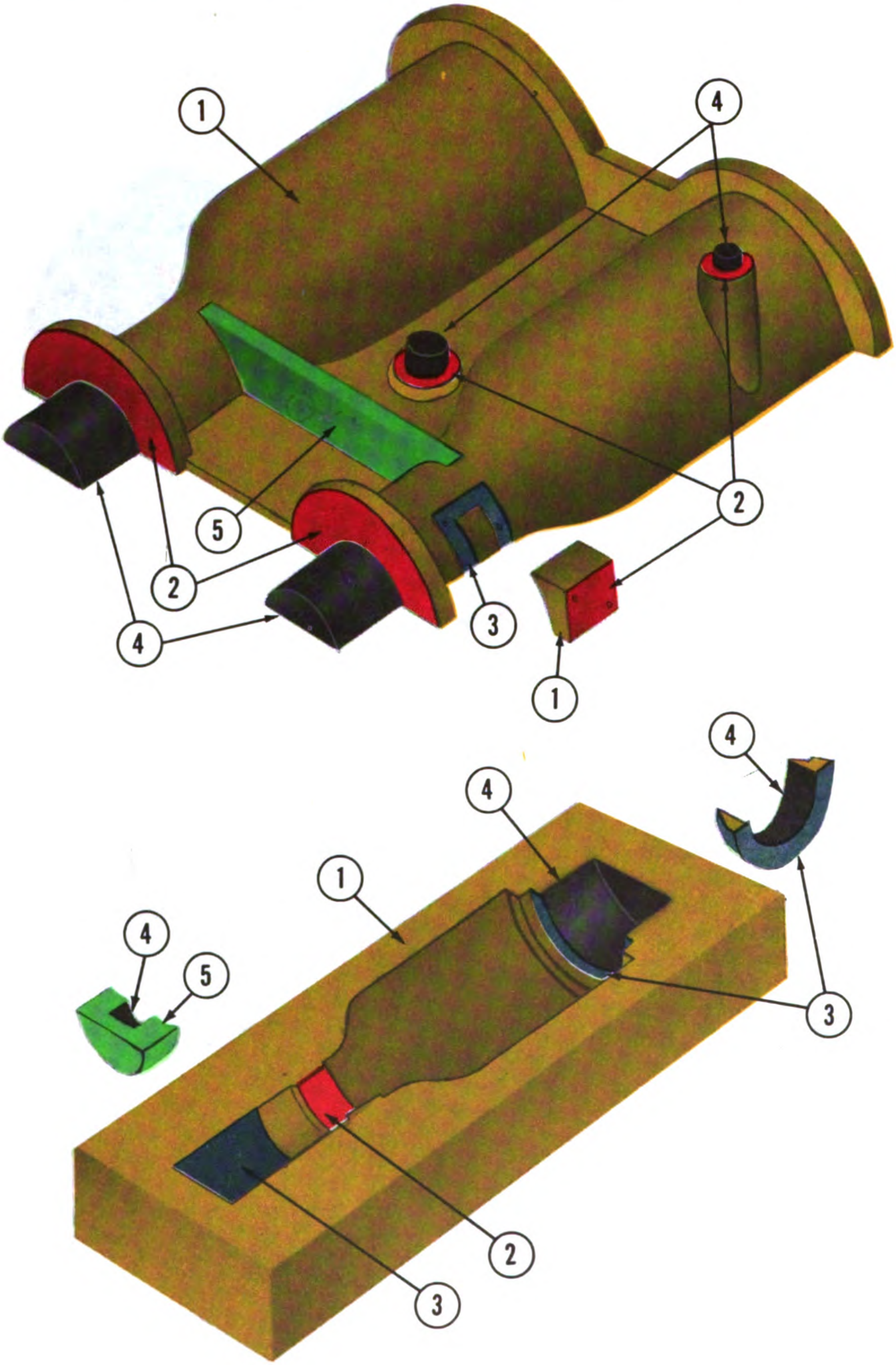

C102.1

Figure 3-14.—Tentative Standard Color Code—1958.

Both types of rammer have a wedge-shaped peen and a cylindrical butt. The floor rammer may have a hickory handle connecting an iron butt and peen, or it may be made of a length of pipe with the peen welded to one end and the butt to the other. (See fig. 3-16.)

If ramming is done solely with the butt of the bench or floor rammer, the sand will be packed unevenly, with the top sand tight but with sand at the bottom of the mold loose. You should use the peen for initial ramming, since its smaller end surface promotes a deeper packing penetration, and packs the sand from the bottom up. The butt of the rammer is used for topping off—that is, for tamping the top portion of the sand mold. The larger surface of the butt causes a shallow penetration, because the force of the stroke is distributed over a relatively wider area. The butt can also be used to smooth off the top of the mold.

Once you have the mold rammed, you can use a simple tool, called a STRIKE, to scrape off excess sand and level the mold surface. Wooden strikes can be used, but you will find that constant service tends to wear away the straight edge of a wooden tool. A lightweight angle bar, or a 36-inch length of 1 1/4 x 1/4 inch steel bar stock, makes a suitable strike. The tool should be light enough for ease in handling, but at the same time rigid enough to resist excessive bending while in normal use. Use it with the narrow edge down, and move it the length of the flask with a zigzag or sawing motion; be sure to keep each end of the strike bearing on the flask's upper edges at all times. (See fig. 3-16.)

Another common molding tool is the TROWEL, for shaping and smoothing the larger surfaces of a mold. Trowels vary in blade shape, blade width, and overall length. They are measured by width and length of blade. As with many other molding tools, the selection of the type to be used depends chiefly upon the Molder's personal preference. (See fig. 3-18.)

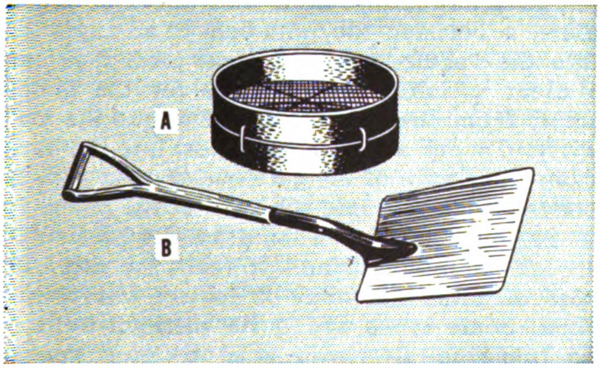

102.2

Figure 3-15.—Riddle and shovel.

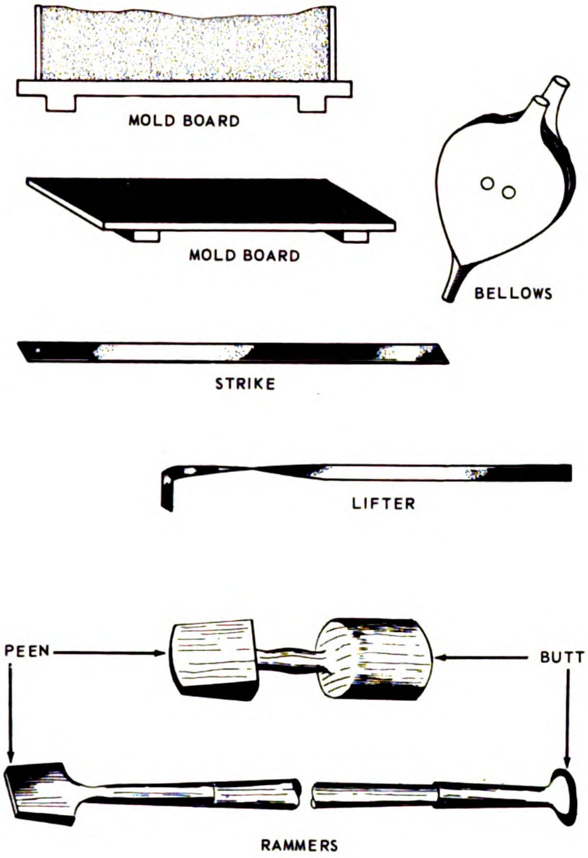

102.3

Figure 3-16.—Rammers, boards, strike, bellows, and lifter.

A LIFTER may be employed as a smoothing tool in places where a trowel cannot be used. Primarily, lifters are designed for removing loose sand from the bottoms of deep mold cavities, and for cleaning and finishing the bottoms and sides of openings. The long stem of the lifter facilitates its use on the sides of holes of small diameter, and its 90-degree toe makes it suitable for slicking the bottom of a hole after loose sand particles have been removed. Essentially, one lifter is very much like another, although they vary somewhat in length and width, and in having straight, offset, or twisted stems.

SLICKS are used for repairing and slicking small surfaces. They are designated by shape and width of blade. The blades of flat slicks and oval

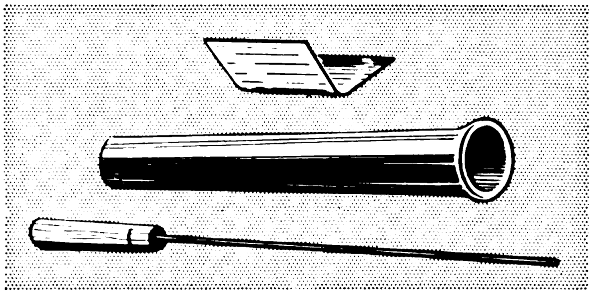

Figure 3-17.—Sprue cutter, gate cutter, and vent rod.

spoons range in width from 3/8 inch to 1 1/4 inches, and are shaped to suit a variety of needs. You will find that, with few exceptions, these tools are double-ended; that is, they consist of two distinct tools, or blades, at opposite ends of a shank. On some tools, the blades are similar in shape, and differ only in size. Other types of slick, such as the taper and oval spoon, the taper and square, the stove tool, and the slick and bead, have a different shape on each end of the shaft, or stem.

For special smoothing operations, you can use CORNER SLICKS, PIPE SLICKS, FLANGE TOOLS, or HUB TOOLS. Corner slicks are mainly used on dry sand and loam work; they can also be used to slick the corners of molds where a regular slick, or the heel of a lifter, would not be satisfactory. These corner tools, although usually made from cast iron, can also be made from sheet metal. They are usually formed with a 90-degree angle.

Pipe slicks are used for slicking cavities in molds constructed to produce cast valves, or pipe fittings, or other cylindrical surfaces. These also can be made from cast iron or from sheet metal, and are made in various sizes.

Flange tools are employed for slicking around the mold surfaces of pipe flanges, valves, and similar areas. They have rounded, crescent blades, formed to different radii; and tools of different blade radii are selected for use on flanges of different sizes. This tool can be fabricated from steel bar stock.

Another special slick is the hub tool, designed to work in small cylindrical depressions such as those that are formed by bosses or by wheel hubs. The hub tool resembles a lifter, but its stem is offset differently, and its blade is thicker and has a slightly rounded edge.

You can see that the tools for lifting loose sand from mold depressions, and for smoothing the surfaces, are numerous. In deciding whether to select a trowel, a lifter, a slick, a spoon, or a bead, you should be guided by the general shape of the area. Use a trowel on large, flat surfaces; use a lifter for narrow or deep depressions; use a slick on small, flat surfaces; use a spoon on concave surfaces of large radius; and use a bead on special hollowed mold surfaces.

All the handtools so far discussed are used in giving the mold cavity a shape that conforms to that of the desired casting. However, every mold must be given some provision for the free entry of the molten metal that will form the casting, and for the escape of the mold gases. The tools most frequently used to do this are SPRUE FORMERS, GATE CUTTERS, and VENT RODS. In using sprues and gate cutters, be careful to slick the mold solidly; otherwise, loosened sand may be carried into the mold cavity along with the molten metal.

The sprue stick is a round, solid piece of wood, usually about 9 inches long. The sand is rammed around it during the formation of the mold cavity, and the stick is withdrawn after the cope has been rammed. Use a sprue stick with all-purpose sand, which is so hard that a sprue former could not be inserted after the ramming is done.

When a tubular sprue is used, the cope must be rammed first. Then the tubular sprue former (a tapered tool of seamless steel with a smooth, beaded edge on the larger end) is forced down into the cope at the selected location. When the sprue is withdrawn, it leaves a vertical channel through the cope into the drag. Sprue sticks are sometimes called gate pins, and tubular sprue formers are also known as punch pipes.

The gate cutter is a thin sheet of metal, having a rounded toe, and bent to an angle that suits the requirements of usual jobs. It is used to clear a horizontal passage for the molten metal, from the foot of the sprue into the mold cavity. To cut a groove, or gate, into the sand, grasp one flange of the gate cutter, and with the rounded edge bite into the sand at the sprue for the required depth. Then draw the gate cutter through the mold surface, to form the gate. The types of gates that may be cut are fairly numerous. Some types are quite difficult to form, and there is always a need to give special attention to their size and location. You will have to practice this technique, in order to develop the steadiness of hand which it requires.

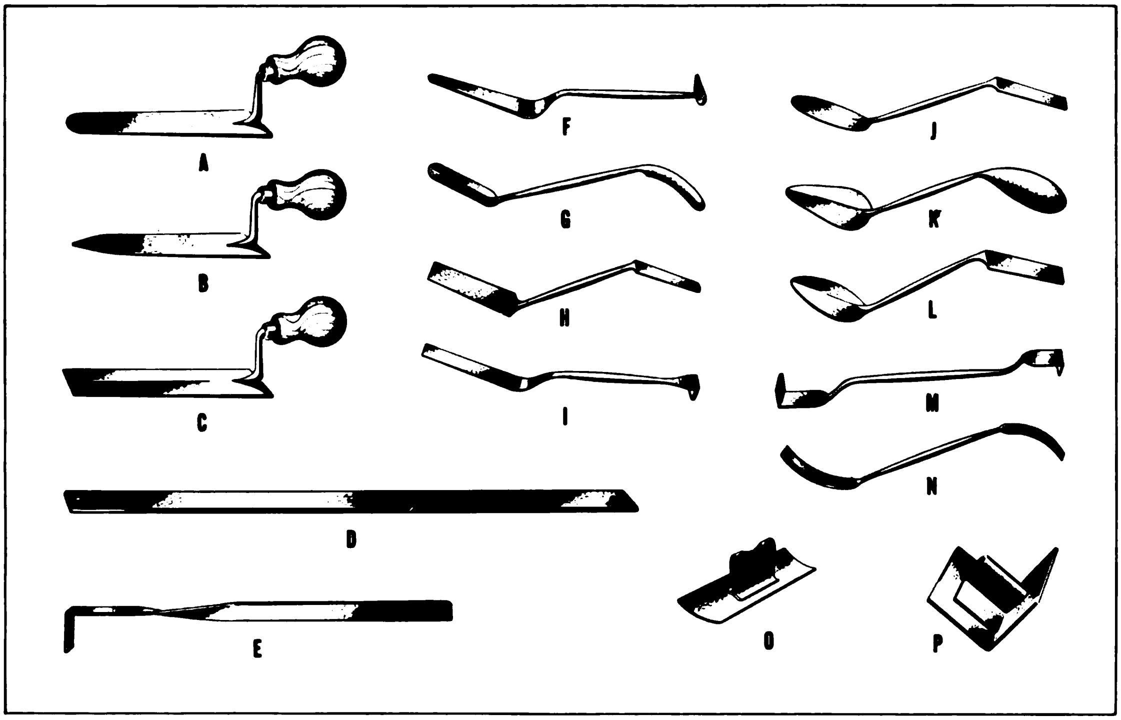

A. Finishing trowel #1.
B. Finishing trowel #2.
C. Square trowel.
D. Strike.
E. Lifter.
F. T-head bent lifter.
G. Slick and bead.
H. Double square.
I. Flat slick with yankee heel.
J. Stove tool #1.
K. Taper and oval spoon.
L. Taper and square tool #2.
M. Hub tool.
N. Circular flange tool.
O. Pipe slick.
P. Square corner slick.

102.5

Figure 3-18.—Mold finishing tools.

Vent rods are used to form openings in the sand that will permit the escape of gases formed in the mold cavity when the molten metal is poured. The vent wire, usually about 3/32 inch in diameter, is slightly enlarged at one end; the other end has either a bend of loop in the wire, or a wooden handle. Figure 3-17 illustrates a sprue cutter, a gate cutter and a vent rod.

After the mold has been rammed and vented, and the sprues and gates formed (and risers provided as reservoirs for hot metal), you will be ready to remove the pattern from the mold. Use a rawhide mallet to tap upon the pattern until it is loose enough to be withdrawn. Occasionally, you may have to add some moisture to the sand, either before you withdraw the pattern, or to effect mold repairs afterwards. Be careful to use a minimum amount of moisture; if the sand was properly prepared for molding, no additional water will be required.

If the contact area between pattern and sand must be moistened before the pattern can be drawn, use either a BULB SPONGE or a FLAX SWAB. (See fig. 3-19.) The bulb sponge ends in a camel's hair brush instead of a tube; pressure on the bulb forces the water through the stem to the brush, and the moisture is applied in the same manner as you would paint a surface. The swab is a device somewhat like a horse's tail, and is suitable for use on a large molding job. After immersion, the flax will retain a considerable amount of water, which can be applied to the surface of the sand by moving the tip of the swab over the sand. Have the tip just touch the area requiring moisture, and squeeze the body of the swab when more water is needed at the tip.

The SPRAY CAN is another device that can be used for moistening any portion of a mold. A nozzle in the can's mouthpiece makes it possible to discharge a fine spray over the mold surface. Use a spray can when you wish to spray a finished mold, either with plain water or with a special mixture called a mold wash.

Some device is required for lifting a pattern from the sand. For small patterns, use a DRAW SPIKE, which is a sharpened piece of metal similar to an ice pick. (See fig. 3-20.) With a very little pressure, you can force the point into the pattern, where it will be held by friction. Then rap the spike lightly on each side, to loosen the pattern, and lift with a slow upward motion. If necessary, steady the pattern with one hand, to avoid damage to the mold.

On all but the smallest patterns, drawing is done by means of LIFTING SCREWS and RAPPING PLATES. These plates, built into the pattern parting surface, are equipped with at least two holes. One or more holes are threaded, to receive the matching thread of the lifting screw. At least one unthreaded hole is provided in the rapping plate, to receive the rapping bar. You can see that the use of lifting screws and rapping plates works to prolong the life of patterns, since there is no puncture such as must be made with a draw spike, and the destructive effect of rapping is taken up by the metal plate. Figure 3-20 shows a lifting screw and a rapping plate.

Two hand tools that are frequently used by the Molder are the BELLOWS, and BRUSHES of various kinds. These are the tools you will employ for dusting off a pattern before you start to ram the mold, for removing sand from the surface of a mold, or for applying powdered graphite to a finished mold surface.

Although some Molders prefer compressed air for blowing away excess sand, you will find that with the bellows you have much better control of the air jet, and can vary it from a soft current to a relatively harsh blast. The intensity of the air stream depends upon the amount of force you apply to the handles of the bellows.

A foxtail or counter brush can be used to dust off patterns, mold board, and similar objects before, during, and after the molding processes. Camel's hair brushes are suitable for applying powdered graphite to mold surface areas, and especially to the channels cut for gates and risers. (See fig. 3-21.)

Certain supporting and strengthening devices (such as FACING NAILS, GAGGERS, and CHAPLETS) and CHILLS (used to hasten solidification) are included among the Molder's tools by some text writers. Actually, there are few occasions when the ML3 or ML2 will use these devices. But you should be aware of the specific purposes served by these supports.

Facing nails are used, when necessary, to reinforce the face of a mold. They must not be inserted until after the pattern has been drawn and the mold slicked.

Gaggers are metal rods, L or S shaped, used to impart strength to the mold in the same way that steel reinforcing rods are used in concrete structures.

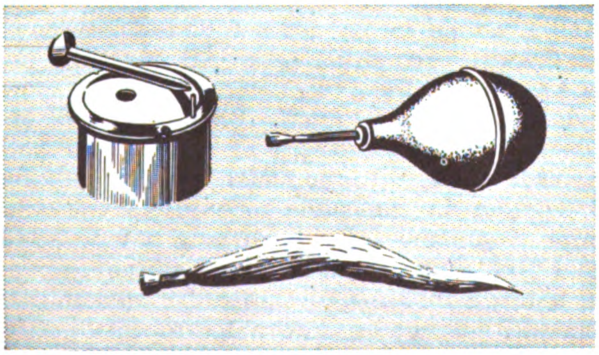

102.6

Figure 3-19.—Moisture-adding tools.

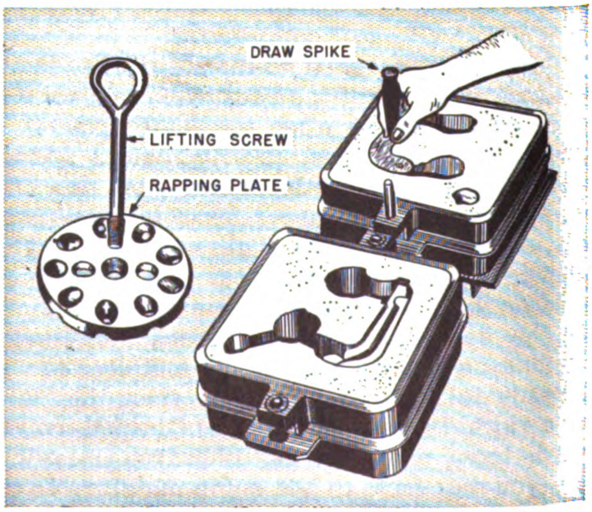

68.10

Figure 3-20.—Using a draw spike.

Chaplets are metal supports, made in a variety of forms and used to hold cores in place. Like facing nails, chaplets should not be used except where absolutely necessary. The choice of the wrong size of chaplet could be harmful for a casting.

Chills are metal devices used to control solidification of the casting metal. Their use requires considerable knowledge and experience. You will probably use them only under the direction of a Chief Molder or a Molder First Class.

Further discussion of these supporting devices is given in chapter 7, of this training course.

PNEUMATIC TOOLS

Certain pneumatic tools, such as the HAMMER or CHIPPING GUN, and the RAMMER, are a necessary part of the Molder's shop equipment. These tools are simple to operate, once you have learned how to handle them properly, and how to keep them in good working condition. (See figs. 3-22 and 3-23.)

Chipping guns are used not only to chip out defects in castings, but also to remove gates and risers. A cold chisel is mounted on the hammer; with the hammer firmly held, and the chisel guided at the proper angle, the operation of the pneumatic hammer differs very little from that followed when you use a hand chisel and a ball peen hammer.

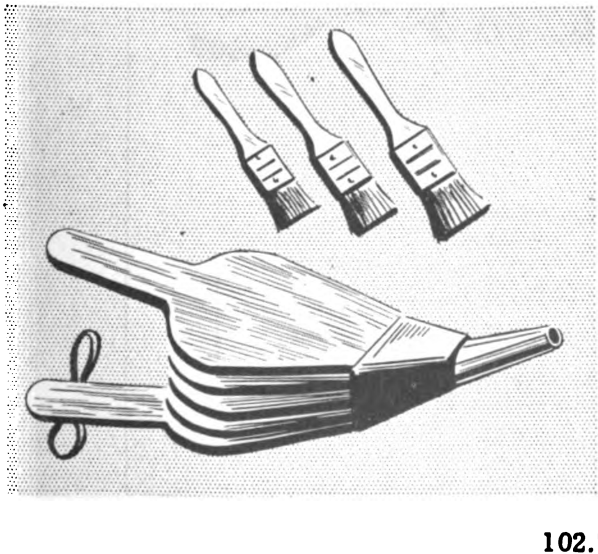

102.7

Figure 3-21.—Bellows and camel hair brushes.

When the pneumatic hammer is used upon a heavy casting, no special precautions are necessary for holding the work so that it will not slip. Small castings, however, will have to be secured in a vise. On large or small work, the operator will have to wear gloves and goggles, to protect himself from the metal chips.

The moving parts of pneumatic tools are closely fitted, and if proper lubrication is neglected, rapid wearing of the tool will result. Use a light oil for lubrication; heavy oil will cause gumming of the working parts, and sluggish operation. When this occurs, you will have to clean the tool with benzine or gasoline, blow it out with compressed air, and then lubricate it properly.

Periodic lubrication is essential when the tool is in use, since the compressed air that drives the piston of the chipping gun has a tendency to drive the lubricant out through the exhaust port. Every hour or so while you are using the tool, you should disconnect the air hose and squirt a little light oil into the hose connection.

Pneumatic rammers are particularly useful when you must work Navy all-purpose sand. The relatively small steel butt, and the powerful pneumatic action, make it possible to pack sand more tightly with this tool than with the hand rammer.

Many foundries are equipped with two types of pneumatic rammer, bench and floor, and have butt and peen attachments that are interchangeable. If your shop has a tool that is not supplied with a peen, it will not be difficult to fabricate one. However, a peen is not really necessary, because the rapidity and force of impact of the tool makes the butt an adequate ramming instrument.

It is a simple matter to place a pneumatic rammer into service. Connect an air-line hose to a source of compressed air, and to the air inlet fitting on the tool, and then open the compressed air service valve. To operate the tool, squeeze the throttle lever on the rammer, and direct the tamping action where you want it.

The life and usefulness of these pneumatic tools depend upon the maintenance and care which you give them. If you have access to a manufacturer's technical manual, make use of it, especially as a guide if you must disassemble the tool. In general, any difficulties that you will have with the pneumatic rammer will arise from air leaks, or from inadequate lubrication.

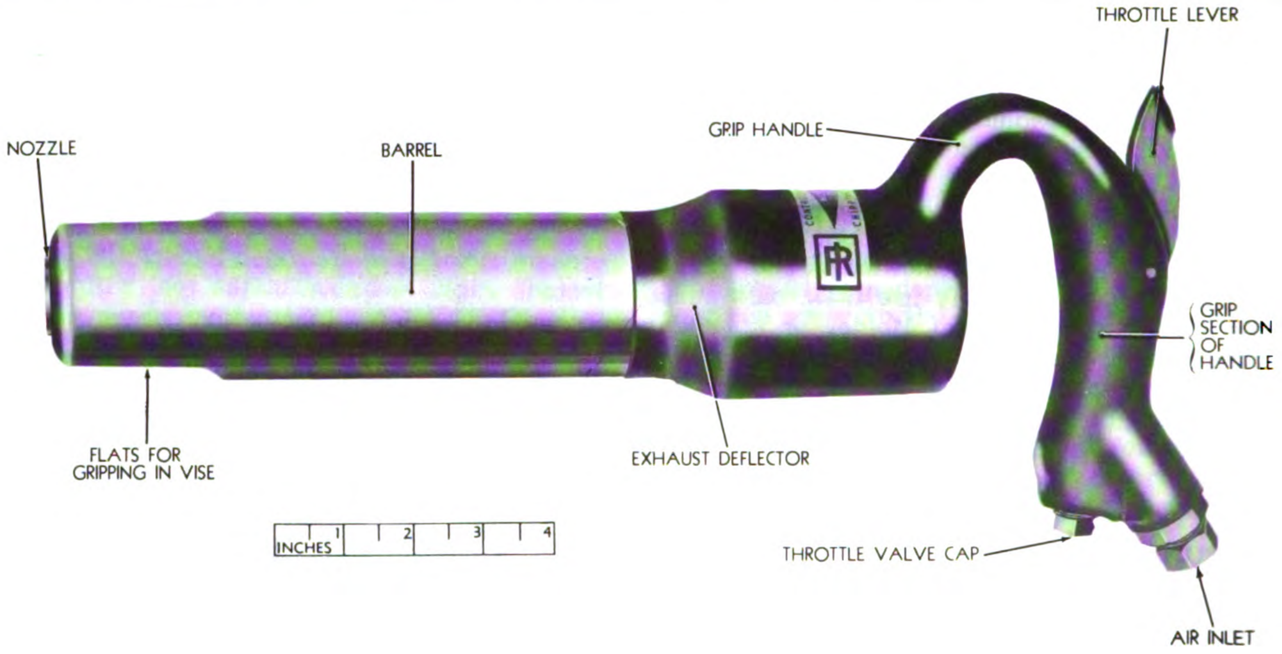

44.55

Figure 3-22.—Pneumatic chipping hammer.

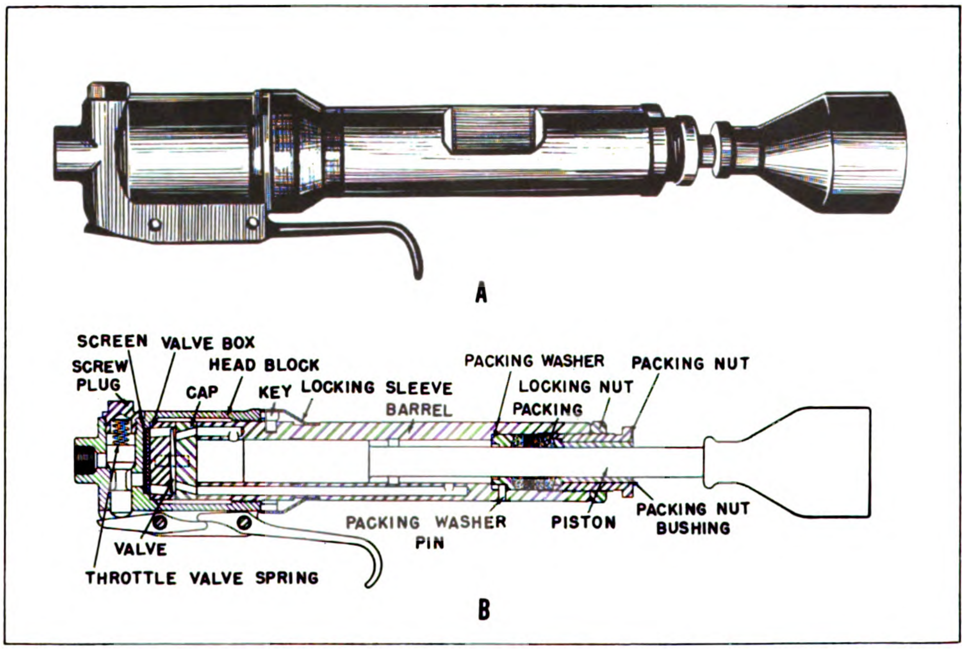

102.8

Figure 3-23.—Pneumatic rammer.

Any air leak will reduce the striking power of the tool, and a noticeable air leak around the rod at the front end of the barrel will affect operation. First try tightening the packing nut, but if the leak persists, you will have to replace the packing.

Slack off the lockout, remove the packing nut, and dig out the old packing. Insert new packing rings, taking care to install them so that the ring joints are staggered; this precaution is to lessen the chance of air leak through the ring joints. While you tighten the packing nut, keep sliding the piston back and forth. When you notice a slight resistance to sliding, you can tighten up the locknut. Just a slight drag should be your signal for tightening, for if you set the packing nut too tightly, the result will be a rapid wearing of the new packing.

Air leak around the throttle of your tool is usually caused by particles of grit lodged between the throttle valve and seat. A thorough cleaning will probably restore an airtight fit. In extreme cases, it may be necessary to lap in the valve with a fine-grained grinding compound.

Lubrication of these tools should be periodic, not left until there is an operating failure. After each 3-hour period of use, you should secure the air pressure, disconnect the air hose, and squirt a teaspoonful of light oil into the air inlet fitting on the rammer. You can then reconnect the air hose and resume your ramming operation.

On pneumatic rammers that have a built-in lubricating unit, it is not necessary to remove the air hose from the rammer. The lubricating procedure consists simply in releasing the throttle valve to stop the ramming, and then holding down the lubrication button for a space of about 10 seconds. At least once each week, the lubricating unit should be filled with the proper oil.

Faulty operation is sometimes caused by sluggish movement of a piston that has become gummy with oil. Squirting a small amount of kerosene into the air inlet, running the tool for about 30 seconds, and then relubricating with light oil, may be enough to remedy the situation. If the tool remains sluggish, however, you will have to disassemble the entire unit, and carefully wash each part in kerosene. Be sure to remove any grit that may be present. Then reassemble the tool, and lubricate it with the proper oil.

CHAPTER 4

SHOP EQUIPMENT

Shipboard foundries differ from each other in the kind and capacity of their equipment. As stated in chapter 2, the reason for these differences is found in the fact that repair ships, tenders, and shore installations are not designed to render identical services to the forces afloat. The equipment available in a particular activity or aboard a specific ship depends to a great extent upon the kind and volume of the metal to be cast.

Certain types of equipment, however, are **found at all Navy foundries. These facilities** include not only furnaces (see chapter 5) and core ovens (see chapter 9) but also sand mulling machines, mold containers (flasks), crucibles and ladles, facilities for cleaning and finishing castings, devices for temperature control, and industrial gases.

SAND PREPARING EQUIPMENT

The sand used to form a mold cavity or a core must be carefully prepared or else the casting produced may be oversize or so rough that the needed machining will result in the casting being undersize. Proper control of the sand involves such factors as bond, compressive strength, permeability, and sintering point (see chapters 6, 8, and 9). Your first necessity, however, is to learn to use the sand mixing equipment.

The term MULLING is used to describe the circular skidding motion by which all ingredients added to a batch of sand are thoroughly intermixed. To prepare the sand properly, a number of sand mulling machines are available in different designs, but all operate on the same basic principle; that is, applying pressure and motion over a given area to force the added bonding agents to smear over the sand grains.

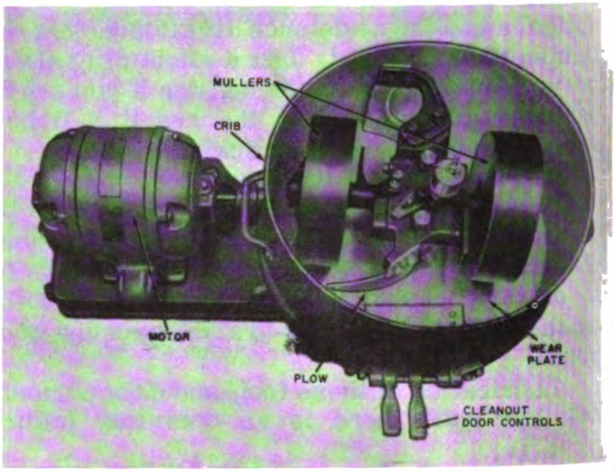

102.9X

Figure 4-1.—Simpson 24-inch, 300-pound batch sand muller.

MULLING MACHINE

The sand muller illustrated in figure 4-1 is the type of equipment that you will find in almost every Navy foundry. A few years ago, all repair ships and tenders getting new sand mixing equipment were supplied with Simpson 24-inch, 300-pound capacity mullers (the type shown). In a few Navy foundries, small laboratory-type mullers of 50-pound capacity have been left installed, because this lower capacity equipment is sufficient to meet the production needs at those foundries. It is equally possible, with the 24-inch muller, to prepare a 50-pound batch of sand.

The Simpson muller shown consists of a metal tub or crib, and a motor, mounted on a steel base. The crib contains two rollers, or muller wheels, and plows; these are attached to a vertical shaft which is geared to the driving motor. In the bottom of the crib is a cleanout door, operated by control levers on the outside of the crib.

Each muller wheel weighs 100 pounds, is 11 inches in diameter, and is 2 1/2 inches thick. When the machine is empty, the wheels should not rest upon the wear plate in the bottom of the crib, but should be adjusted to provide a minimum clearance of at least 1/2 inch.

When the muller is charged with sand, and the motor started, the furrowing action of the plows and the skidding action of the rollers unite to accomplish a thorough mixing of the material. The plows also help to unload the machine by pushing the mulled sand to the cleanout door, once the batch has been processed.

As with all machinery, cleaning and lubrication are important factors in keeping the equipment in good working order. The action of the plows is usually sufficient to clean out the muller between batches, but the crib of the muller should be given a thorough cleaning when the machine is secured for the day.

Lubrication is very necessary for satisfactory operation of the sand muller. When the wheels and the vertical shaft are in motion, sand is always present, and some particles will work their way into the bearings. The bearings must be removed for cleaning after extensive use, since, if they are allowed to remain, the abrasive action of the sand will cause undue wear. Follow the lubrication charts and specifications that the manufacturer furnishes with each machine.

In doing some jobs—for example, nonferrous molding done with natural bonded sand—it may not be necessary to use the sand muller. The sand may be conditioned by a mechanical riddle of the type shown in figure 4-2. The dry sand is spread out in a long, low heap on the foundry floor. A sprinkling can is used to add water (tempering agent) and to avoid forming pools. As the water is added, work the heaped sand back and forth with a shovel. When the water content of the heaped sand has reached approximately 6 1/2 percent, pass the sand through the mechanical riddle again. After the sand has been riddled the second time, pile it into a heap, and cover with damp burlap to prevent surface drying. Allow the heaped sand to stand for several hours; preferably overnight.

Sand that has been used to produce molds is wet down again after the mold has been "shook out." New sand or binders are added in due proportions to bring the used sand up to specifications. The sand is heaped in a pile, wet down, and allowed to steam itself into condition. When the sand has cooled, it is riddled through the mechanical riddle to remove any foreign matter (riddlings) such as gates, metal scrap, pieces of broken cores, or foundry nails which may have been left in the used sand.

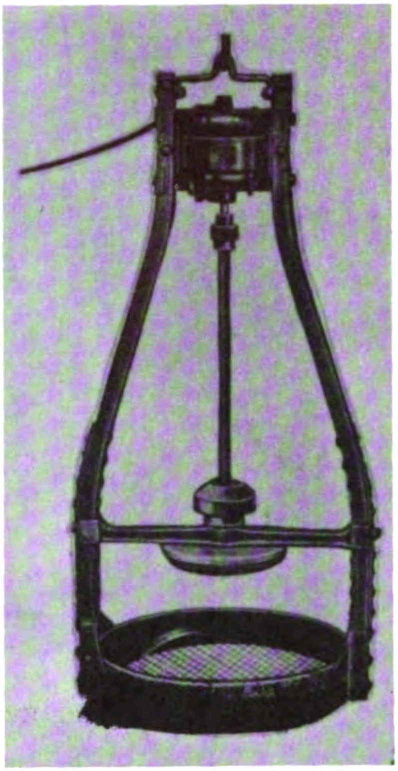

102.10X

Figure 4-2.—Mechanical riddle.

MOISTURE TESTER

Whether foundry sands are prepared by hand or by machine, an important factor is the sand's moisture content. Expert Navy Molders can determine the sand's approximate moisture suitability for molding, by squeezing a handful of sand and then observing its characteristics. However, experience has shown that better castings can be produced when the moisture content of molding sand is more accurately determined and controlled. Such control is assured only when instruments designed to determine moisture content are substituted for the "by-guess" method.

A number of testing devices are available, but the one most frequently employed in Navy foundries is the SPEEDY MOISTURE TESTER illustrated in figure 4-3. The operating principle is similar to that of a carbide lamp, in that it depends upon gas generation. A mixture of

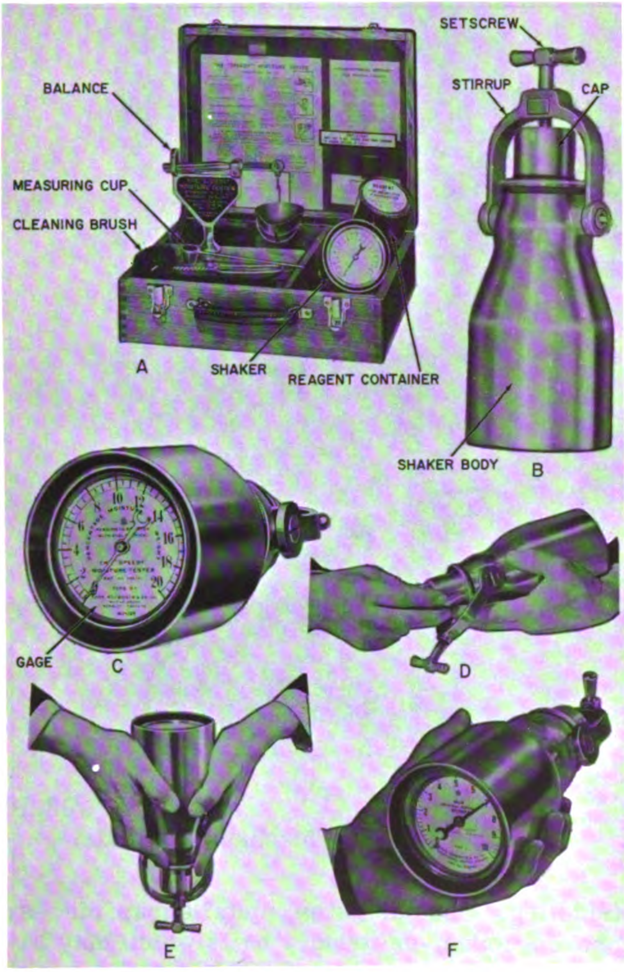

102.11X
Figure 4-3.—Speedy moisture tester.

moisture and calcium carbide generates acetylene gas; if this gas is liberated in a sealed chamber, internal pressure is developed.

The testing outfit consists of a stowage case holding a supply of calcium carbide, a stem-handled cup for measuring the calcium carbide, a small balance for weighing the sand sample to be tested, and a shaker or container in which the test is actually made. (See part A of fig. 4-3.) The shaker has four distinct parts: shaker body, cap, stirrup fitted with a setscrew (see part B of fig. 4-3), and the moisture-percent indicator dial (see part C of fig. 4-3).

As the shaker is agitated, the calcium carbide becomes mixed with the moist sand, and the resulting gas builds up a pressure in the container. The greater the moisture content of the sand sample, the greater will be the amount of acetylene gas generated, and the greater will be the pressure. This pressure is what causes the pointer to move along the dial, but the gage is calibrated so that you read not pressure but the corresponding percentage of moisture.

In using this device to conduct a moisture test, you should proceed as follows:

1. Remove all the items except the balance from the stowage case.
2. Rig the balance in an upright position.
3. Loosen the setscrew on the shaker stirrup, and remove the cap. (See part D of fig. 4-3.)
4. Weigh out a 6-gram sample of sand, and place it in the cap. (If the material being tested is bulky, you may want to place the sample in the body of the shaker, and reserve the cap for the reagent.)
5. Use the measuring cup to measure out a level cupful of calcium carbide from the reagent container, and place this amount in the body of the shaker.
6. With the shaker held in a horizontal position, replace the cap, adjust the stirrup, and tighten the setscrew.
7. Hold the shaker in a vertical position, with the stirrup downward, and shake vigorously until the dial needle begins to move. (See part E of fig. 4-3.)
8. Return the shaker to a horizontal position, and as soon as the needle stops moving read the moisture percentage from the dial. (See part F of fig. 4-3.)

When you have completed a test, loosen the stirrup setscrew of the shaker just enough so that the gas can slowly escape. After this, remove the cap, clean the interior of the cap and shaker with a clean cloth, and replace the cap and its rubber washer. You should then return the shaker to the stowage case.

You will find that this tester requires no maintenance other than general cleaning, and a frequent check on the accuracy of the balance. However, you must exercise caution in the matter of handling the calcium carbide. A residue remains after the test, and you must be careful how you dispose of this residue, when you empty the shaker body.

MOLDING EQUIPMENT

A mold as applied to foundry practice is the body of sand containing the impression (cavity) of a pattern in which molten metal is poured to produce a casting. Some type of support has to be provided to keep the molding sand from spreading when it is rammed over the pattern and to keep it from crumbling when the molten metal subjects it to pressure from within.

The supports that are provided during the ramming process are the flasks (boxlike containers), the bottom boards, and slip jackets. After the mold has been rammed, the flask (or, if this is removed, a slip jacket) keeps the mold from being deformed under the pressure of the molten metal.

FLASKS

A flask usually consists of two sections, the COPE and the DRAG. They are made so that they fit together accurately. The Navy uses a standard interchangeable flask section, that may be used as cope, drag, or (in multipart molds) cheek. These sections may be bolted together, or they may be kept aligned by removable pins.

You may come across some flask sections, however, that are intended for use only as the drag section. In using these sections, you will have to make sure, before you begin ramming up, that the pins point downward when the section is placed on the mold board. Unless you take this precaution, you will not be able to attach the cope section after the drag has been reversed.

Most of the flask sections that you will use will be formed from a single piece of rolled-rib channel steel, with joints and fittings welded. Figure 4-4 illustrates three types of molding flasks, and a snap flask which will be described later. The thick flanges reinforce the mold, and also give some degree of protection against the distortion that could occur with rough handling.

Each section is normally about 6 or 8 inches deep, and the variation in size of sections is in the length and width. The small, one-man flask illustrated in part B of figure 4-4 may be 16 x 12 inches, or it may be 14 inches square. A flat lifting handle is welded midway between the lugs provided for the flask pins. The medium-sized and the large-sized flasks (see parts A and C of fig. 4-4) have two-man handles welded at points equidistant from the lugs.

Snap flasks made of a lightweight aluminum alloy are available commercially. These frames are constructed for jobs that cannot be accommodated by the standard flasks. They are always made in sets of two sections, with the cope depth usually greater than that of the drag. A 5-inch cope depth and a 4-inch drag depth are standard. The frames are hinged, and equipped with a locking device; in this way, the snap flask may be removed when the mold is rammed. All corners are reinforced, and the flasks are fitted with double-V type guide pins.

Aboard ship, however, you will probably use wooden snap flasks like those illustrated in part D of figure 4-4. Because the wooden flask is more subject to wear, it is a good idea to make it of heavier wood than is actually required for the immediate purpose, so that it will give longer service.

After a mold has been rammed, the snap flask is opened at one corner, and the entire flask is removed from the mold. In its place, a wooden or lightweight metal jacket is slipped over the mold, to reinforce it against the pressure that will be developed as the casting is poured. This jacket is similar to the snap flask, but is made in one piece, rather than in sections. With a single snap flask, and several jackets, it is possible to ram up a number of molds.

CLAMPS AND WEIGHTS

Although clamps are not part of the molding flasks illustrated in parts A, B, and C of figure 4-4, they are a necessary device for holding together the mold parts while the casting is being poured. When a casting is poured in a snap flask, weights instead of clamps are used for holding the sections together.

Unless weights, clamps, or similar locking devices are employed, the mold parts are very likely to separate at the parting line when the

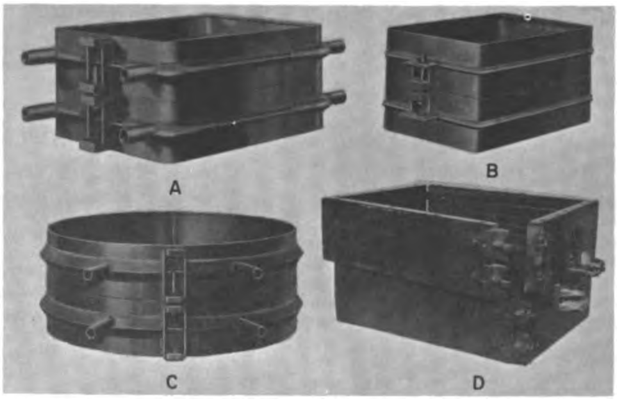

102.12X
Figure 4-4 .—Molding flasks.

molten metal is poured into the mold cavity. The reason for this, of course, is the hydrostatic pressure of the molten metal. The denser the metal, the greater the lifting force developed. For example, lead poured into a mold exerts a greater lifting force than would steel poured into a similar mold.

The clamps that you will employ in molding processes will be one of the two types illustrated in figure 4-5: The clamp shown in part A is of the fixed type; the type shown in part B is adjustable.

Clamps of the fixed (nonadjustable) type can be fashioned in the shop, to the size and shape required. After the clamp is put on the mold, drive a wooden wedge between the clamp and the edge of the flask (as shown in part A of fig. 4-5), to lock the mold parts tightly together.

The adjustable clamp shown in part B of figure 4-5 does not require the use of wedges. A movable upper jaw on the clamp makes it possible to adjust for any size opening that falls within the size range of the clamp. When used, the lever on the movable jaw is depressed, locking the clamp in position; as it locks, the movable jaw exerts a slight pressure which squeezes the mold together. The number of clamps required on a given job will depend upon the size of the mold and the hydrostatic pressure of the molten metal.

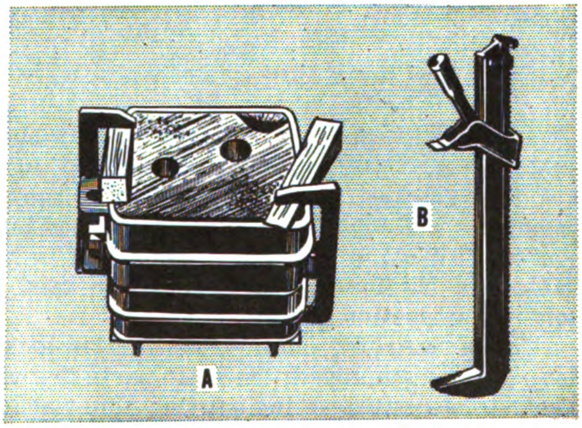

102.13

Figure 4-5.—Clamps for locking the mold sections together.

When a mold is of such a size or shape that it would be impractical to clamp, weights may be used. Weights of scrap cast iron are made to suit the foundry's needs. They are made from 1 inch to 2 inches thick, and large enough to cover the entire top surface of the cope of the mold. Usually they are made to fit a particular size snap flask and have slotted holes through the center to permit center pouring. Hand openings should be provided at each end to facilitate handling of the weights.

LIFTING DEVICES

Chain falls, or some similar device for lifting weighty objects, are indispensable equipment in a foundry. The task of moving a crucible containing molten metal from furnace to mold is one that cannot be done without the use of a crane or other lifting device. The job of closing a large mold can be done by employing a chain fall, as indicated in figure 4-6. There is no good purpose served in expending a lot of muscular effort in performing a difficult task, when the use of a crane or hoist would make the work relatively easy.

In some foundries, it is the practice to seat a wire rope in the socket of a hoist by sealing it in with molten metal. This method should never

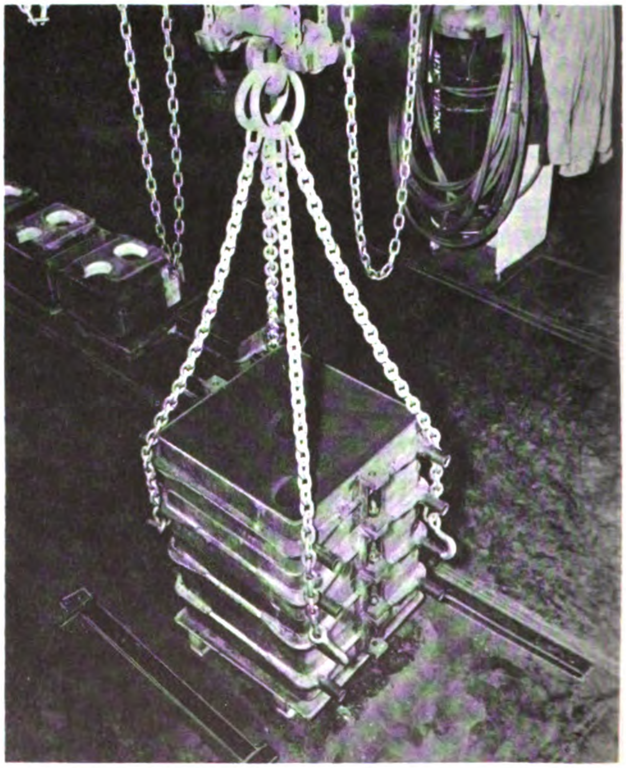

102.14

Figure 4-6.—A chain fall used to close a mold.

be used in place of a safe mechanical holding device. The heat of the molten metal in a ladle could be sufficient to melt the metal in the socket, and cause the ladle to drop. This would be a severe hazard to all the men working in the foundry.

You should not only avoid using molten metal in the socket of a hoist, but you should also inspect any hoist that you are going to use, to see if the hoist rope or chain is secured by solidified metal. If it is, report the condition immediately to your leading petty officer.

POURING EQUIPMENT

Pouring of molten metal and alloys in the Navy foundry is a very critical operation in the production of a casting and one which should be carefully conducted. The equipment used for conveying the molten metal from the melting furnace to the mold (ladle equipment) should be designed for high structural strength and foolproof operation. Because of the high temperatures involved and the possibility of localized stresses set up in the equipment as a result of thin linings of the crucible or ladle and the spilling of molten metal during pouring, a high factor of safety should be employed.

When used in their broadest sense, the terms CRUCIBLE or LADLE refer to a vessel or melting pot of some very high refractory material such as clay, graphite, porcelain, or cast iron and steel. Crucibles are used for melting or calcining substances which require a high degree of heat. The term "ladle" usually refers to the pouring vessels which are constructed from steel shells.

CRUCIBLES

A crucible is a melting pot or container in which materials that have relatively high melting points can be melted. In some instances, a crucible is made from cast iron, cast steel, or wrought iron. However, the crucibles used in the Navy are usually of silicon carbide, or graphite bonded with clay. They are molded into standard shapes as shown in figure 4-7 and are available in sizes ranging from 1 to 400. The numerical designation of the molded crucible, in addition to indicating the size, may be used as an approximation of the crucible's capacity in pounds of aluminum. The capacity as stated by the manufacturer refers to the amount of water (in pounds) that the crucible will hold. The relationship between the crucibles commonly used in the Navy by numerical designation, size in actual dimensions, and capacity are indicated in table 4-1.

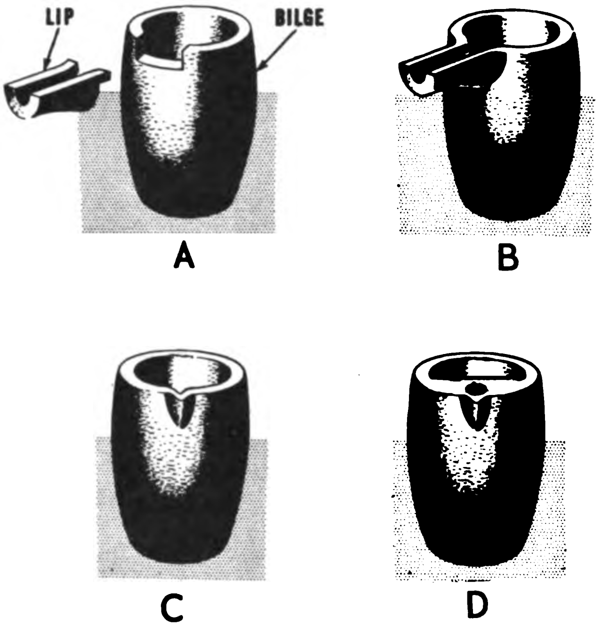

102.15
Figure 4-7.—Crucibles.

Capacity of any crucible in terms of a specific metal can be determined by means of a formula involving the specific gravity of the metal, or by a formula involving the density of the metal. Specific gravity is the ratio of the weight of a given volume of the metal to the weight of an equal volume of water. Density of a metal is its weight per unit volume, and may be expressed as pounds per cubic inch, or pounds per cubic feet.

In Navy foundries, the pattern is the basis for determining the weight of the finished casting. Using a table of densities (weight) expressed in pounds per cubic inch (see chapter 10, facilitates the computation of the amount of metal necessary to make a casting from the pattern. The use of formulas that include specific gravity or density (weight) is not as difficult as you might suppose, since there are any number of sources from which you might get this information for practically all metals and alloys. Table 10-1 of this training course gives the specific gravity and density (in weight per cubic inch) for the metals and alloys commonly used

Table 4-1.—Crucible Sizes and Capacities.

Numerical Designation	Height (in.)	Bilge—OD (in.)	Water Capacity (lb)
10	8 1/16	6 9/16	4.8
70	15 1/16	12 3/16	32
150	18 3/8	14 7/8	60
200	20	16 1/4	80
275	22	17 13/16	110

in Navy foundries. However, the densities listed may vary from those given in other sources due to the addition of various other elements in the making of the metal's composition. Therefore, these tables are only approximate and are intended merely as guides.

A simple formula for determining the capacity of a crucible is:

$$C = WS$$

C in this formula represents the crucible capacity, in pounds, for the particular metal under consideration; W is the water capacity, in pounds, of the crucible; S is the specific gravity of the metal.

For example, suppose you wish to find the capacity of a No. 70 crucible in terms of gray cast iron. In general, iron is 7 to 8 times as heavy as an equal volume of water. Assuming that the table you consult gives the specific gravity of gray cast iron as 7.22, and its density as 0.2604; substituting the two known values in the formula above, you have:

$$C = 32 \times 7.22,$$
$$\text{or } C = 231 \text{ (in round numbers)}$$

Thus you know that the cast iron capacity of the No. 70 crucible is about 231 pounds. Its safe working capacity will normally be from 70 to 90 percent of its total capacity.

The method of calculating capacity in terms of the density of the metal under consideration is almost as simple as the one given above, and it has the added advantage of providing the answer in terms of the safe working capacity. The formula that you should use is:

$$C = N \frac{W}{168}$$

C, as before, represents the crucible capacity, in pounds, for the specific metal; N is the crucible number; W is weight (in pounds) of the metal per cubic foot; and 168 pounds is the approximate weight of a cubic foot of aluminum. The density of gray cast iron is 0.2604 pound per cubic inch. Calculate the weight per cubic foot of gray cast iron by multiplying 0.2604 by 1728, which gives approximately 450 pounds per cubic foot. Substituting 70 and 450 for the terms N and W, and solving the equation, you arrive at an answer of 187 pounds as the safe working capacity of a No. 70 crucible. This figure is approximately 80 percent of the total capacity as determined by the first formula.

The types of molded foundry crucibles commonly used in Navy foundries are illustrated in figure 4-7. Parts A and B of figure 4-7 show the detachable long-lip, and the long-lip crucible which is used in the tilting type oil-fired furnace. Part C of figure 4-7 shows a short-lip crucible which may be used for hand-shank pouring, and may also be used in a lift-coil high-frequency induction furnace. Part D of figure 4-7 shows a bottom-pouring (teapot) crucible which may be used for hand-shank pouring of small cast iron and nonferrous castings.

During foundry operations, a crucible must be given careful handling. Before placing a crucible in service, bring it slowly to a temperature of about 300° F, in order to dry out any moisture that may be present. Slow heating is essential, for a rapid preheating may crack the crucible wall. The preheating may be done in a core oven, but only if no cores are being baked there at the same time.

When the crucible has been preheated, but before it is charged, bring its temperature up to red heat. Inspect it for cracks, which are most likely to occur when a high temperature is suddenly applied. If the condition of the crucible is satisfactory, it is ready for charging.

The charging operation must be carefully performed, for at this high temperature the crucible will be very brittle. Be sure to exercise due care when you deposit the metal ingots and the scrap metal, and especially when poking or stirring the charge during the melting cycle. Caution is also essential when you remove excess metal from the sides and bottom of the crucible, between heats or at the close of the working day. At such times, you should inspect the interior of the crucibles to see if cracks have developed. Hairline cracks, through which the molten metal cannot run, will probably be sealed by the next heat, when the crucible expands; but any cracks that are large enough to be visible between heats will necessitate discarding the crucible. A crucible whose wall thickness becomes less than 5/8 inch should be discarded.

When the crucible is taken out of service, you must clean out all excess metal, leaving none to solidify. Cool the crucible slowly, and stow it in an inverted position in a warm, dry place. Although a core oven is suitable for preheating when no cores are being baked, it is not suitable for storage, since there is greater chance that the crucible will absorb residual moisture from wet core sands.

LADLES

A ladle is the usual equipment used for transporting molten metal from the furnace to the mold. Sometimes a crucible is employed as a pouring ladle, as mentioned before. For the most part, however, the ladles you will use will be steel shells, having a cast iron capacity of 60, 100, or 200 pounds, and lined with refractory material.

Just before the furnace is ready to be tapped, preheat the ladle to a red heat, with either a Hauck burner or a gasoline blow torch. Then fill the ladle to about three-quarters of its capacity. In this way, there will be no danger of the molten metal being inadvertently spilled, since the ladle must be tipped to a 60° angle before the metal will flow over the lip.

The TYPES of ladles may be described as lip-pouring, teapot, and bottom-pouring. This last type is usually of large capacity, and is used chiefly in industrial plants where large volumes of molten metal must be handled, and production is an important factor. Figure 4-8 illustrates the types commonly used in Navy foundries. The smaller ladle, which is the lip-pouring type, is fitted with a double-ended carrying shank. The teapot ladle has a bail in addition to the carrying shank. This bail makes it possible to use an overhead crane for transporting large volumes of molten metal, or for transporting the metal over any but short distances.

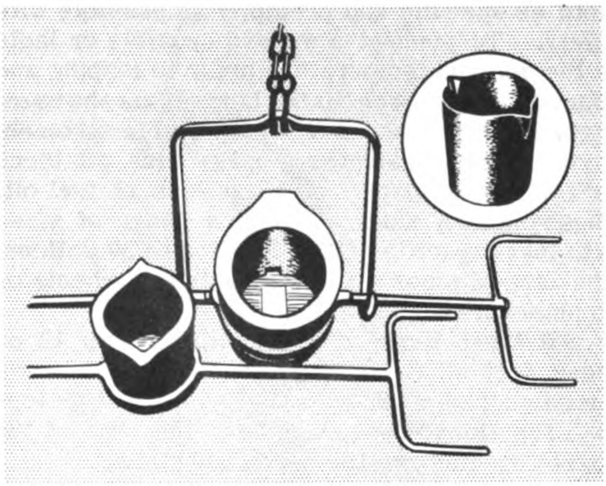
102.16

Figure 4-8.—Typical ladles.

The LINING of a ladle has an important bearing upon the casting that is produced. Even though the metal is perfectly clean when the furnace is tapped, it will produce slag in a ladle where the lining is not sufficiently refractory. If the lining of the ladle has a low dry strength, it may crumble above the surface of the molten metal, and the bits of crumbled rim will be poured into the casting with the metal.

Since the main purposes of the lining are to keep the molten metal from chilling and the ladle shell from overheating, thickness of lining needed depends somewhat upon the metal to be handled. A ladle used for pouring steel should have a thicker lining than one used for pouring cast iron, aluminum, or bronze. However, it is standard use in Navy shipboard foundries to have a bottom lining of 1 inch thickness, and to have the lining of the ladle sides taper from 1 inch at the bottom to about 3/4 inch at the top. For handling steel, the ladle will require frequent relining, or at the least, patching of the lining after each heat has been poured.

PORTABLE HEATING EQUIPMENT

As molten metal cools rapidly in the transfer stage from the furnace to the mold, it is important to preheat the ladle or the molded pouring crucible and to get the molten metal into the mold as speedily and promptly as possible with safety. To preheat a molded crucible or ladle to the desired temperature prior to tapping and pouring, an oil torch (Hauck burner) may be used. Figure 4-9 illustrates a hand portable oil torch. Figure 4-10 illustrates a large size oil torch with a fuel capacity of 15 gallons of fuel oil. These heating units come in a range of sizes with fuel capacities from 1 gallon to 20 gallons. The larger sizes may be mounted on wheels or be unmounted.

All these burners are equipped with 12 or more feet of air and oil hose. The fuel consumption per hour will vary from 2 1/2 gallons to 12 gallons, depending upon the size of the nozzle opening and the valve adjustment.

Since there is no pressure on the fuel tank, oil has to be supplied to the nozzle by suction. For this, compressed air is used; cutting off the supply of compressed air cuts off the torch. This is an important feature. If the air supply should be accidentally cut off, the oil suction would automatically cease, thus eliminating a fire hazard from spilled oil or kerosene.

The Hauck burner produces a flame of about 2100° F. The use of a larger burner ensures that a greater area will be covered, but does not result in a greater degree of heat being applied to a given area. Within the range of flame length for a specific size of burner, variation from a short intense flame to a long soaking flame may be produced by adjusting the oil and air valves. The Hauck burner lights instantly without preheating and will burn steadily without pulsation. Fuel oil suction is sufficient to permit operation of the torch at least 14 feet above the oil level in the tank.

102.17X
Figure 4-9.—Compressed air torch.

When a Hauck burner is used for preheating ladles or molded crucibles, the burner may be adjusted to produce a powerful and smokeless heat with a maximum flame temperature of 2100° F.

The importance of the ladle preheating operation cannot be overemphasized. Numerous injuries have resulted from improperly dried ladles and pouring crucibles. Moisture that remains in the crucible or ladle may become trapped under the molten metal. If this occurs, water vapor is rapidly formed and the metal will be blown out of the ladle with explosive force. Even the slightest bit of moisture in the ladle lining will often cause porosity and casting unsoundness.

To facilitate drying out the ladle, it is good practice to drill 3/16-inch or 1/4-inch holes on 4-inch centers in the ladle shell prior to the ramming of the refractory lining. When this provision has been made, it is easy to determine when the lining is dry enough for use. With the application of heat from a blow torch or a Hauck burner to a new ladle lining, steam escapes through the ladle shell vents (holes) until all the moisture is driven off. Heat should be applied with the burner until the flow of steam stops completely.

Even though the ladle or crucible is not newly lined, it must be preheated just prior to the tapping of the furnace—to eliminate any moisture that may have been absorbed from the atmosphere by the lining. In addition, preheating the ladle or crucible means the molten metal will lose less heat in the transfer from the furnace to the mold.

In addition to being used to dry out ladles and crucibles, blow torches and Hauck burners may be used to skin dry molds. The burner may be adjusted to form a long sooty flame to produce the desired finish on the surface of a green sand mold.

TEMPERATURE-MEASUREMENT INSTRUMENTS

In conjunction with melting equipment (see chapter 5), the melting, tapping, and pouring operations for molten metal require temperature control. All Navy foundries use temperature control instruments known as pyrometers to

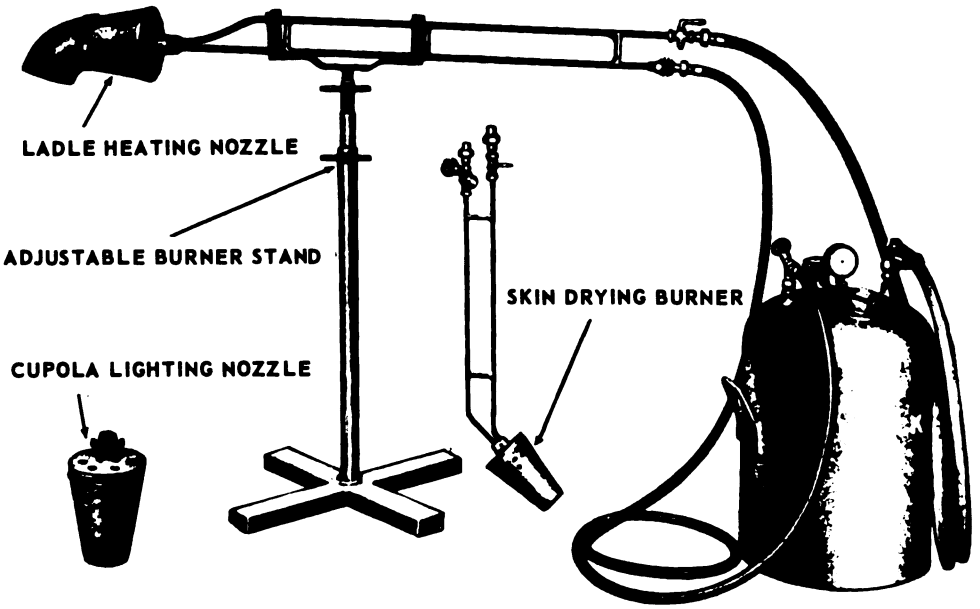

102.18X

Figure 4-10.—Compressed air burner.

determine this requirement. As you know, ordinary room temperature is measured with a thermometer. When high temperatures are involved, such as the tapping and pouring temperatures of molten metals, an instrument known as a pyrometer is used. On the basis of what they do, thermometers and pyrometers are similar; but on the basis of how they do it, there is little similarity. The ordinary thermometer utilizes the expansion and contraction of mercury in a glass tube to determine temperature variations. Because high temperatures are involved, mercury thermometers are not feasible to use for determining the temperature of molten metals.

There are two types of pyrometers: (1) those which measure temperature through actual contact, and (2) those which measure temperature from a distance. Several types of pyrometers are available in each group. In Navy foundries, the immersion type pyrometer (see fig. 4-11) is representative of the first group, and the optical pyrometer (see fig. 4-12) is representative of the second group.

IMMERSION PYROMETERS

Described in its simplest form, the immersion type pyrometer consists of a thermocouple and a temperature indicating instrument to which the thermocouple is connected with positive and negative leads. Essentially, the thermocouple consists of two dissimilar wires jointed together at one end by twisting and welding. These wires are insulated from one another except at their hot junction and are encased in a protective tube. A potentiometer pyrometer is used as an indicating instrument to which the wires from the thermocouple are attached. The pyrometer, although it measures electrical energy, is so calibrated that its scale indicates the temperature in degrees, Fahrenheit.

When dissimilar wires are joined together at both ends, and when heat is applied to one end (the hot junction), an electromotive force (voltage) is generated in the circuit. When the cold ends of the thermocouple are maintained at a constant temperature and are connected to a galvanometer (part of the recording instrument) sensitive enough to measure in thousandths of a volt, the temperature of the hot junction can be determined. The voltage indicated by the galvanometer is proportional to the difference in temperature between the hot and cold ends. Although electromotive force (voltage) is actually measured, the instrument is calibrated in degrees of temperature instead of electrical units. As more heat is applied to the hot junction of the thermocouple, a larger amount of voltage is

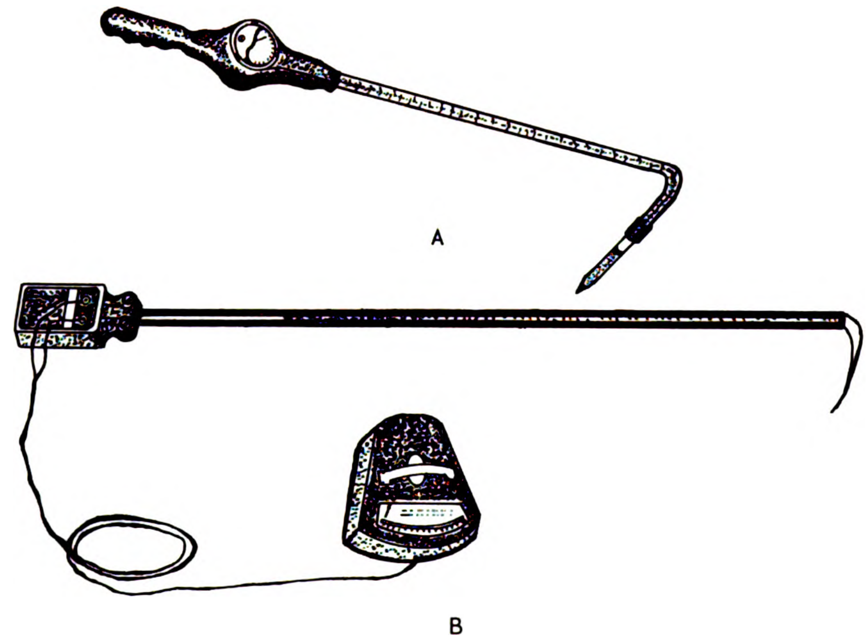

102.19X

Figure 4-11.—Immersion type pyrometers.

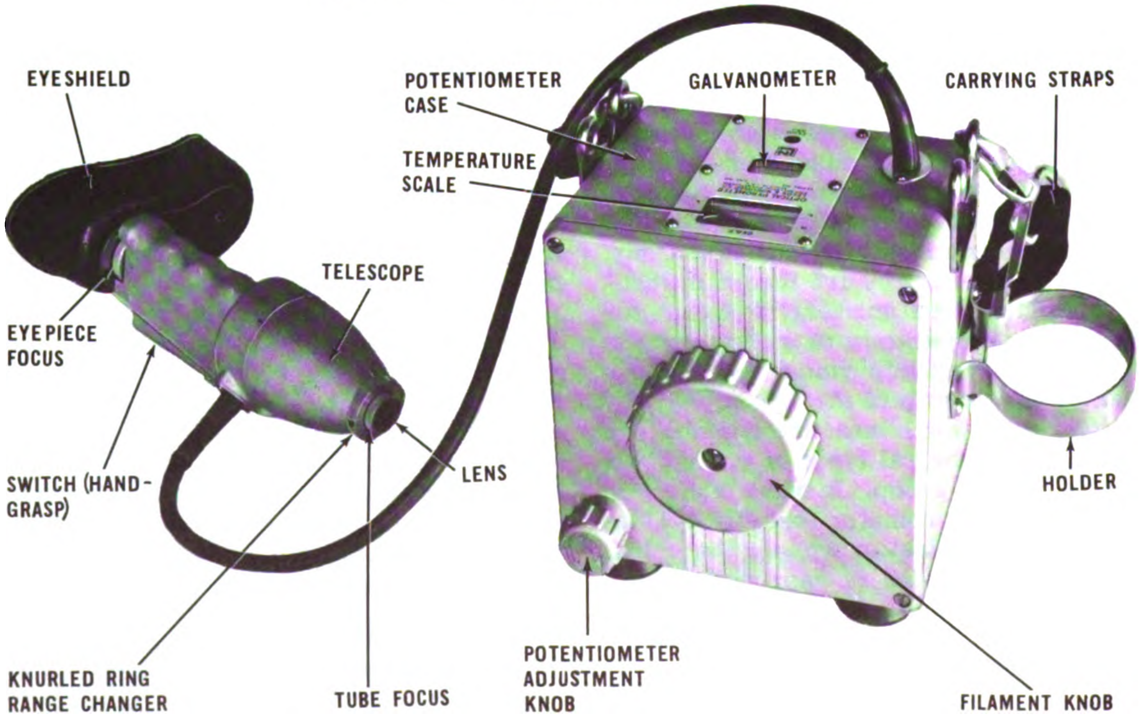

102.20X

Figure 4-12.—Portable optical pyrometer.

generated, which in turn causes a higher temperature to be recorded on the indicator dial.

Although the principle of all immersion type pyrometers is the same, their design may vary. Compare the two pyrometers illustrated in figure 4-11. Part A illustrates a portable immersion pyrometer which has the indicating dial on the handle. Part B illustrates the wall-type immersion pyrometer—the indicating dial may be permanently attached to the foundry wall, and when it is in use, the extension leads from the thermocouple are attached to the dial. The overall length and shape of the immersion type pyrometers which you may have in your shop may differ from those illustrated, but they will be used in the same manner.

Immersion type pyrometers are used to measure temperatures up to, but not over, 2500° Fahrenheit. Because the thermocouple is made of insulated Chromel and Alumel wire, the tips of the thermocouple are resistant only to the nonferrous metals (brass, bronze, copper, and aluminum). Therefore, immersion type pyrometers are used primarily for the nonferrous metals and alloys and are NOT suitable for use with steel and cast iron.

The thermocouple of the immersion type pyrometer consists of insulated Chromel and Alumel wires whose hot junction is swaged into a replaceable, rod tip. (See fig. 4-13.) The dissimilar thermocouple wires are led through a protective tube to the terminal connections in the handle. From the terminal, lead wires run to the galvanometer. To use the pyrometer, immerse the rod tip in the molten metal to about three-fourths of its length for a few seconds. Then read the indicating dial on the potentiometer. There are no buttons to push; however, be sure that the galvanometer is adjusted to compensate for the room temperature of the cold junction before the indicating dial is read. Be certain that the tip remains in the molten metal for a sufficient length of time to attain the correct temperature; that is, until the galvanometer fails to show any increase in temperature with continued immersion. This should not take more than a few seconds.

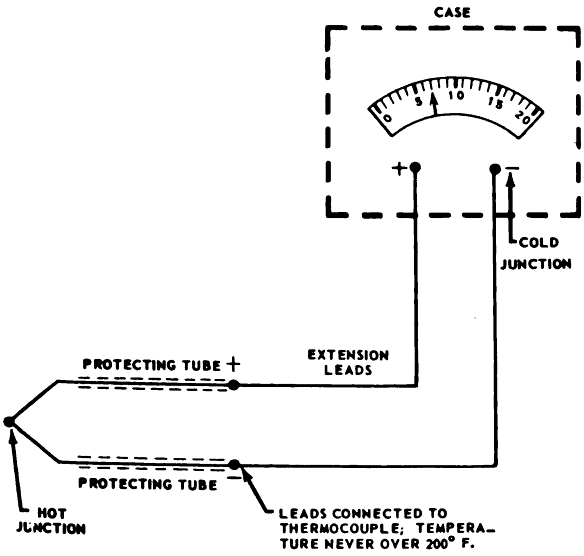

102.21

Figure 4-13.—Wiring diagram for an immersion type pyrometer.

These instruments have few moving parts, and most of the maintenance is electrical. If there is any failure of the sealed parts, they must be returned to the manufacturer for adjustment. However, there are certain precautions that you can take in order to make sure that you are getting proper results. The protective tubes that cover the thermocouple wires should be checked after 200 hours of operation. The extension leads from the thermocouple to the potentiometer must be connected positive to positive and negative to negative, at the thermocouple and at the potentiometer. The point at which the leads are connected to the thermocouple must not be subjected to temperatures in excess of 200° F; the cold junction, always at room temperature, must not be exposed to drafts, to abnormally high temperatures, nor to temperatures under 32° F.

There are some sources of pyrometer trouble that you can locate and correct without having to call on the Electrician's Mate for help, or sending the parts back to the manufacturer.

1. Erratic readings on the dial, even though the furnace heat remains constant, may be due to loose connections or dirt in the sliding contacts. You can check and tighten the connections at the binding posts, and clean the sliding contacts.
2. Readings that are manifestly too low may be caused by too high resistance in the lead wires, or by a short circuit through the resistors. You should check for broken strands or poor connections, and inspect the lead wire insulation for dampness.
3. If your recording instrument fails to respond to a known variation in thermocouple temperature, the trouble may be a short circuit in the thermocouple terminal head or in the leads, or it may be a broken circuit. You can determine if there is a short circuit in the

terminal head by disconnecting the thermocouple from the recording device, and testing the circuit with a battery and bell. You can locate a break in the circuit by checking to see if there is a loose connection at a binding post, or a break in one of the leads.

OPTICAL PYROMETERS

For measuring high temperatures where a thermocouple would not prove practical, optical pyrometers are used. The operating principle of these instruments is the matching of the color of the molten metal with a standard color scale. The color of the molten metal is obtained by passing a light ray from the hot body through a telescope which is part of the pyrometer instrument; it is matched to a filament through which an electric current flows. There are two types of optical pyrometers, designated as variable intensity, and constant intensity.

In the constant intensity type, the current passing through the filament is held constant, and the light from the molten metal is made to match it by use of a prism in the telescope. As the prism is turned to vary the intensity of the light, the angular degrees through which it is turned are measured on the color scale dial. The dial is calibrated in temperatures that correspond to the degrees of revolution, so that the temperature can be read directly.

In the variable intensity type of pyrometer, the brightness of the filament is made to match the intensity of the molten metal by increasing or decreasing the amount of current flowing through the filament. The instrument measures current value (as opposed to angular degrees of turn), but since the current also is proportional to the temperature, the scale is calibrated in terms of degrees of temperature.

A portable pyrometer of the variable intensity type is illustrated in figure 4-12. The unit consists of two main parts: (1) a case containing flashlight batteries, and fitted with adjusting knobs and a temperature scale; and (2) a telescope that is fitted with an eyepiece and adjusting rings, and that contains the filament and a grip switch (handgrasp) controlling the circuit between battery and filament.

Of the two adjusting rings on the end of the telescope opposite the eyepiece, the outer one (tube focus) is used to focus the telescope on the hot metal, and the knurled inner one (range changer) is used to adjust for range of temperature. The knurled ring next to the eyepiece is for focusing the eyepiece on the filament.

In using this instrument for measuring the temperature of a hot body, the procedure is as follows:

1. Grasp the telescope body, closing the grip switch so that current flows through the filament.
2. Hold the instrument so that the hot body is visible through the tube of the telescope. (The grip switch must be closed at all times, so do not release your grasp.)
3. Turn the ring next to the eyepiece, until the eyepiece is focused on the filament.
4. Focus the telescope for distance, using the tube focus knob on the end of the tube.
5. Adjust for high or low temperature range, using the knurled inner adjusting ring (range changer).
6. With the circuit energized, the filament is now glowing. Turn the large filament knob on the front of the case until the intensity of the filament matches the brightness of the hot body. The filament knob should be turned clockwise. As soon as you have a match of color, take the telescope away from your eyes, but do not relax your hold on the grip switch.
7. Depress the small knob (potentiometer adjustment) on the front of the case, and adjust it so that the pointer on the galvanometer rests at zero. This setting is visible through the small window in the nameplate on the upper side of the case.
8. Through the large window in the nameplate, read the temperature setting on the temperature scale. (As the small knob is moved to set the galvanometer at zero, it also moves the temperature indicator.)

A highly important factor in the use of an optical pyrometer, whether of the prism or the filament type, is the ability of the human eye to recognize a perfect match. Because of the fallibility of human judgment, the optical pyrometer is not as completely dependable as the immersion type. Nevertheless, the accuracy of the results obtained with the optical pyrometer depends upon the operator's ability to match the filament intensity with that of the molten metal or hot body, as shown in figure 4-14. Each of the different views shown in figure 4-14 illustrates the appearance of the filament in relation to the same hot body under different temperature circumstances. In part A of figure 4-14 the filament is less intense than the metal; the temperature scale with this filament adjustment

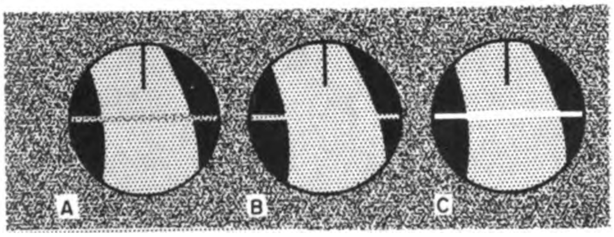

102.22X
Figure 4-14.—Matching the filament with the hot body.

would be inaccurate. The same would be true in part C where the filament intensity is greater than that of the molten metal. Only when the intensity of the filament and the molten metal match, as shown in part B of figure 4-14, is it possible to obtain an accurate reading.

A basic factor in measuring temperature with the optical pyrometer, is developing a trained eye able to recognize a perfect match. That is, a perfect match of color for optical pyrometers utilizing the prism principle, and a perfect match of intensity for optical pyrometers utilizing the principle of the disappearing filament. With either type, constant practice will help develop the skill necessary for accurate readings. Until you have acquired this skill in using the optical pyrometer in the foundry, have the shop supervisor (chief or first class) or the leading petty officer check your results.

CUT-OFF AND FINISHING EQUIPMENT

A modern foundry has available a variety of equipment in addition to that designed to produce molds, cores, and molten metals for pouring castings. Most of this additional equipment is designed to clean castings; that is, to remove gates and risers, surface defects, or the scale and dirt that usually adheres to the casting after it is shaken from the mold. The equipment for accomplishing these cleaning operations includes sprue cutters (metalcutting bandsaw), pneumatic chipping guns, portable and stationary grinders, sandblast cabinets, and such accessories as vises and handtools. As pointed out earlier in this chapter, all foundries in which you work may not have all of this equipment. But as you move from one duty station to another, you will probably work with many of these machines.

METALCUTTING BANDSAW

After a casting is removed from the mold and has cooled to approximately room temperature, the gates and risers are cut off. The cutting operation may be accomplished in various ways. The usual method, though, is to use a METALCUTTING BANDSAW. This is especially true when the casting is made from brass, bronze, or aluminum. When the casting is made from iron or steel, an oxyacetylene cutting torch is frequently utilized. But here, too, the metalcutting bandsaw is a useful machine tool. Salvaged gates and risers are saved for future use.

Although there are many types of metalcutting bandsaws, the one illustrated in figure 4-15 is typical of those available in Navy foundries. This machine is easily adjusted and operated. Since

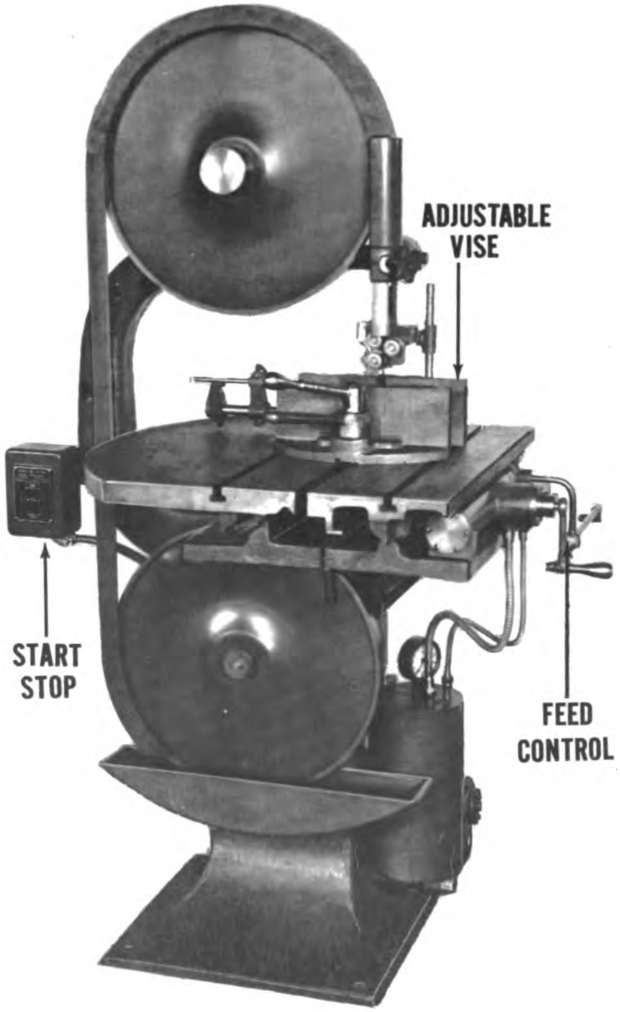

29.137X
Figure 4-15.—A metalcutting bandsaw.

the rate of saw-blade travel and feed pressure is variable, the tool is adaptable for a wide variety of metalcutting applications. By using the worktable vise, short pieces may be cut with a maximum of safety.

SANDBLASTING CABINETS

Although wire brushes, hand or power-driven, may be sufficient for cleaning many castings, Navy foundries usually have blasting cabinets for this purpose. The casting is placed in a cabinet into which a high-pressure air stream is led. Sharp silica sand, or angular steel grit material, is introduced into the air stream, and as the latter plays over the castings, the sand or steel grit acts as an abrasive agent.

The essential parts of a blasting cabinet are: a chamber for the castings, a mixing chamber for the sand and air stream, a hose and nozzle for directing this stream upon the castings, a method for recovering the abrasive and returning it to the mixing chamber, and a dust-collecting system.

Confining the blasting operation to the interior of the cabinet is an important health and safety measure. Scattering of sand and dust in all directions is avoided; the operator is protected from silica dust, prolonged exposure to which is likely to result in a respiratory disease.

The cabinet shown in figure 4-16 illustrates the way in which these devices are utilized. The charging door is the point at which castings are placed in and removed from the cabinet. The view window permits the operator to observe the blasting process. The two HANDHOLES allow the operator to manipulate the nozzle and the casting. Rubber sleeves and gloves are attached to these handholes, so that the operator has no excuse for not availing himself of these necessary protections. The blast of air and abrasive is controlled either by a knee-operated lever or by a foot pedal.

PEDESTAL GRINDERS

Parting line fins, and portions of gates and risers that remain after their bulk has been cut away from the casting with a metal saw or sprue cutter, can be removed with pedestal grinders or portable grinders. The pedestal grinder usually has a coarse wheel mounted upon one shaft, and a fine wheel upon the other. You will find that results depend, not only upon speed of wheel, but also upon the choice of wheel.

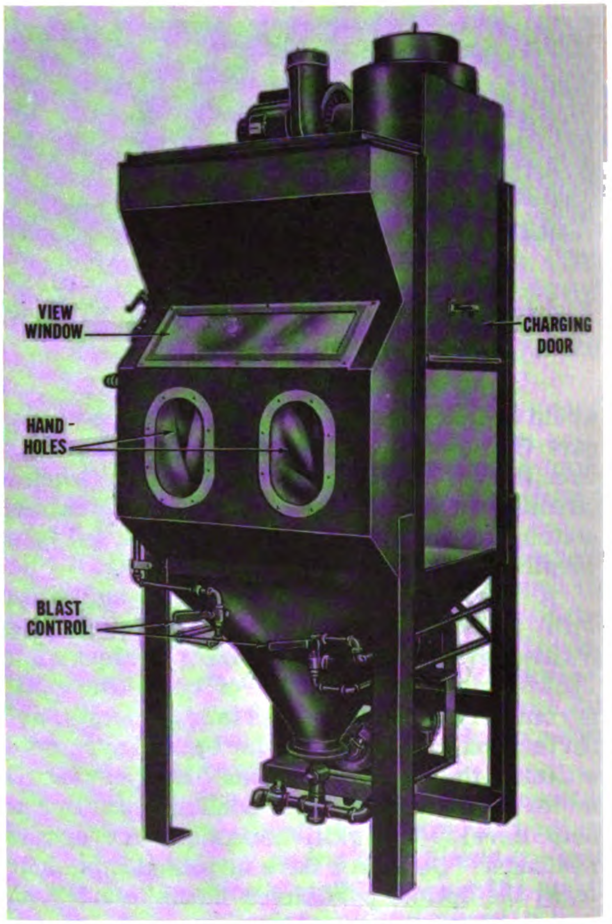

102.23X

Figure 4-16.—Sandblasting cabinet.

For grinding brass, bronze, and cast iron, use a silicon-carbide wheel. An aluminum-oxide wheel will probably be more satisfactory when you are grinding steel. When you have a considerable quantity of metal to remove, you will find it advisable to work with the coarse wheel first, and then use the fine wheel for the finishing touches.

OXYACETYLENE CUTTING TORCHES

Oxyacetylene cutting may be used to facilitate the removal of risers and gates on large castings and for the preparation of scrap for remelting by utilizing heat and using the equipment similar to that used for welding.

The standard cutting torch looks very much like the oxyacetylene welding torch. The main difference in the two torches is that the cutting torch has an extra tube for high pressure (cutting) oxygen. The flow of high pressure oxygen can be controlled from a valve or trigger assembly on the handle of the cutting torch. Figure 4-17 compares the standard welding torch and the cutting torch. Part A of figure 4-17 shows a standard oxyacetylene welding torch.

Some welding torches are furnished with a cutting attachment which may be fitted to the torch in place of the welding head. With this attachment, the welding torch may be used as a cutting torch. (See part B of fig. 4-17.)

Cutting tips are made of copper or of tellurium-copper alloy. They are of the same general design as that shown in figure 4-18, whether they are used on the standard cutting torch or on the cutting attachment to the welding torch. The central opening or orifice in the tip is for the jet or stream of high pressure oxygen that does the cutting; the smaller orifices are for the oxyacetylene flames used for preheating the metal to its ignition temperature. There are usually four or six of these preheat orifices in each oxyacetylene cutting tip; however, some heavy-duty tips have many more preheat orifices.

Cutting tips are furnished in various sizes. In general, the smaller sizes are used for cutting thin material and the larger sizes are used for cutting heavy material. Tip sizes are identified by numbers. When numbers such as 000, 00, 0, 1, 2, 3, 4, and 5 are used to identify tip sizes, the lower numbers indicate the smaller tips; for example, a No. 000 tip is smaller than a No. 1 tip, and a No. 1 tip is smaller than a No. 5 tip. Some manufacturers identify cutting tips by giving the drill size number of the orifices. Large drill size numbers indicate small orifices; for example, drill size 64 is smaller than drill size 56.

In military specifications and standards, and also in the Fleet Oriented Consolidated Stock List (FOCSL), oxyacetylene cutting tips are identified by three numbers. The first part is the tip size (0, 1, 2, 3, etc.). The second part is the drill size number of the orifice for the cutting oxygen. The third part is the drill size number of the preheat orifices. For example, the number 1-62-64 identifies a No. 1 tip with a cutting orifice of drill size 62 and preheat orifices of drill size 64. Table 4-2 gives tip numbers, orifice sizes, and approximate cutting ranges of various sizes of oxyacetylene cutting tips.

INDUSTRIAL GASES

Since you are required to know the standard Navy marking system for compressed gas cylinders and the uses of certain compressed gases required in the foundry (oxygen, acetylene, and carbon dioxide), you must be able to identify the cylinders of the various gases. In addition, you should be familiar with the construction, design, and size of these cylinders. You should also know how to handle and stow gas cylinders. Therefore, this section will give you a few of the important facts about gases and gas cylinders. Additional information concerning the general nature and the specific characteristics of compressed gases can be obtained from <u>Field Manufacture of Industrial Gases,</u> NavPers 10078.

GENERAL NATURE OF GASES

Before discussing the physical properties and characteristics of specific gases, let us briefly summarize the general nature of gases.

ALL GASES ARE COMPRESSIBLE; that is, they can be forced into spaces of lesser volume than they occupy under normal conditions. You are probably familiar with the two GAS LAWS which express the relationship of the gas pressure with its volume and temperature. BOYLE'S LAW states that the volume of a confined body of gas varies inversely as the absolute pressure, provided the temperature remains constant. In other words, when the pressure is increased the volume decreases, and when the pressure is decreased the volume increases. CHARLES' LAW states that the volume of gas expands as its temperature is increased, if the pressure is kept the same. This law also states that the pressure of a gas is increased when the temperature is increased, if the volume of space occupied is kept the same. In the actual work of compressing and handling gases, the temperature, volume, and pressure are all changed at one time or another.

The TEMPERATURE FACTOR is important in handling gases, for when the temperature of a gas in a container is increased, the pressure increases on all parts of the container. Consider an automobile tire, for example. The air in the revolving tire gains heat from a warm pavement, and (primarily) from friction. This added heat energy increases the molecular activity of the air within the tire. The tire appears to have accumulated more air, as indicated by the increased pressure against the tire walls (the tire

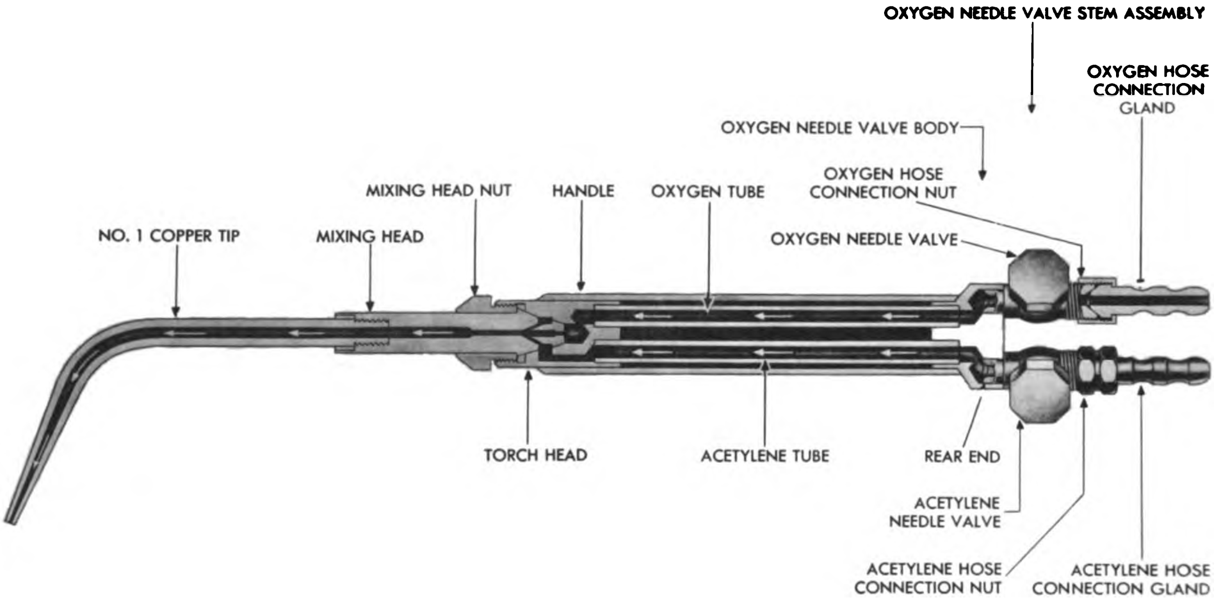

A STANDARD OXYACETYLENE WELDING TORCH

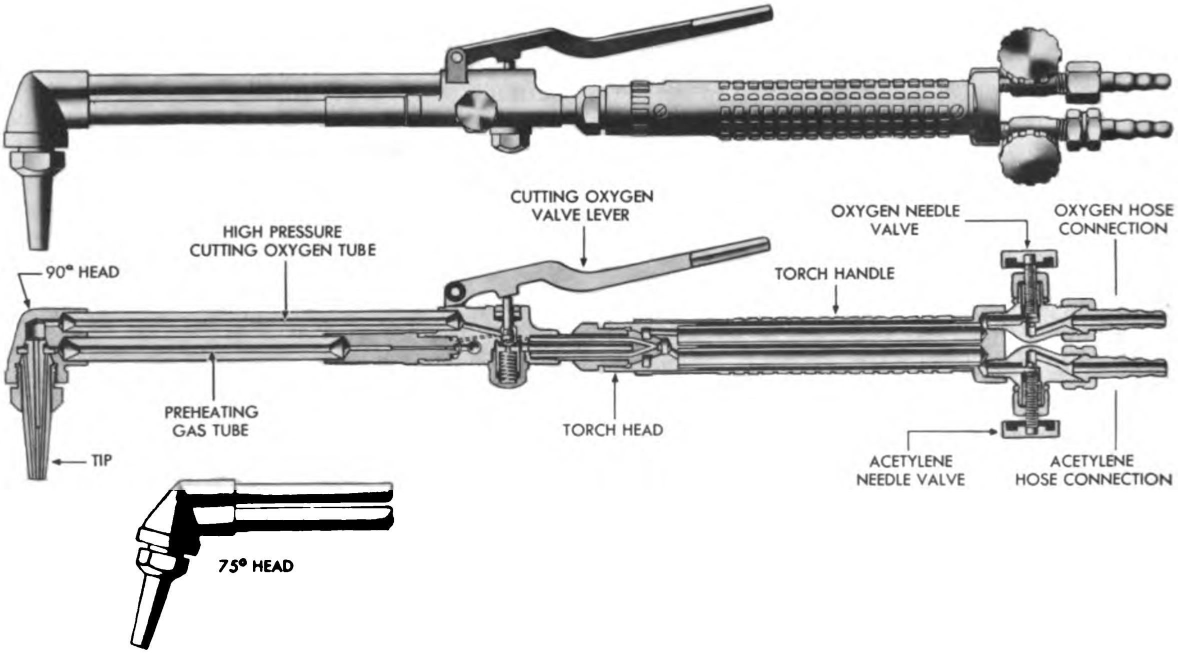

B CUTTING ATTACHMENT FOR AN OXYACETYLENE WELDING TORCH

11.102; 126X

Figure 4-17.—Welding and cutting torches.

Table 4-2.—Sizes and Cutting Ranges of Oxyacetylene Cutting Tips.

Tip identification	Cutting oxygen orifice (drill size)	Preheat orifices		Approximate cutting range straight edge cutting of medium steel (inches)
		Drill size	How many	
1-62-64	62	64	4	1/8 to 1/2
2-56-62	56	62	4	1/4 to 1 1/4
3-52-59	52	59	4	1 to 2 1/2
4-43-57	43	57	6	2 to 6
5-30-56	30	56	6	6 to 12

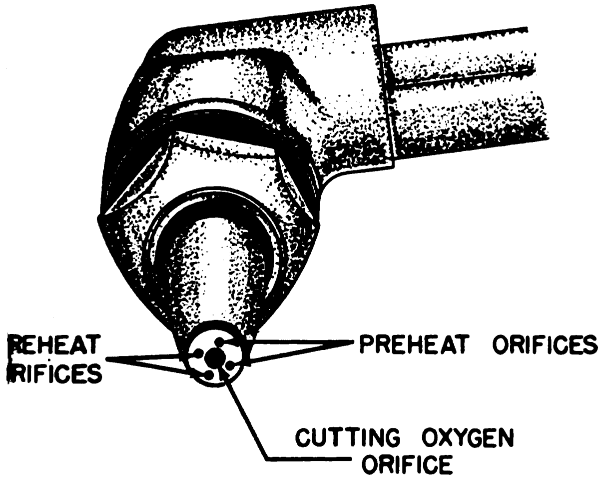

11.127X
Figure 4-18.—Oxyacetylene cutting tip.

ctually expands due to the increased pressure). et the tire cool however, and the pressure turns to normal.

Gas cylinders are not elastic and do not exnd from the pressure of the gas within them. linders are, therefore, filled with compressed ses only to the maximum safe pressures at rmal atmospheric temperatures. Storage of e cylinders in hot spaces will increase the essure of the confined gases to a dangerously h point, where the cylinders will explode.

The boiling points for the various liquefied ses are important. One reason is that when rious gases have to be separated from each her, their different boiling points make this ssible. As an illustration of this principle, ke a mixture of water and alcohol in an autoobile radiator: Alcohol boils at 172° F, but water boils at 212° F; the alcohol therefore begins to evaporate and separate from the water before the water nears the boiling point. As the water is never allowed to reach 212° F, the alcohol content grows less and less as the temperature rises above 172° F. The same process is employed in separating and purifying gases.

Table 4-3 gives some of the common gases used by the Navy with related information such as cylinder size, uses, and safety precautions.

GAS CHARACTERISTICS

In addition to knowing the general nature of gases, you should know some of the distinguishing features of the gases utilized by the Navy, and the special precautions to be exercised in handling industrial gases. From a standpoint of volume used by the Navy, the gases oxygen, carbon dioxide, acetylene, and nitrogen, together with various refrigerants, lead all others by far. The first three gases will be discussed in some detail; then the other Navy stock gases will be discussed briefly. Included in the discussion are the safety precautions to be followed when handling each of the industrial gases.

Acetylene

Acetylene is a chemically produced gas which is not found in the natural state. In 1892, a method for the commercial production of the chemical CALCIUM CARBIDE was discovered. It is from calcium carbide and water that

Table 4-3.—Common Gases Used by the Navy.

HIGH PRESSURE GASES

Gas	Container size	Use	Precautions
Compressed Air . . .	200 cu ft cyl	General	General safe handling. Air under pressure is a dangerous toy. Always use it as a tool.
Carbon Dioxide	15 lb cyl . . . . 50 lb cyl	For recharging fire extinguishers, soda fountains, etc.	General safe handling.
Carboxide	30 lb cyl . . . . 60 lb cyl	Fumigant	General safe handling.
Hydrogen	176 cu ft cyl	Inflation of lighter-than-air aircraft; oxyhydrogen underwater cutting.	Highly flammable. Keep separate from oxygen.
Helium (Breathing) . .	200 cu ft cyl	Deep-sea diving, optical instruments.	General safe handling.
Helium (Technical) . .	200 cu ft cyl	Inflating target balloons, heliarc welding.	General safe handling.
Nitrogen	184 cu ft cyl	For optical work . .	General safe handling.
Oxygen (Breathing) . .	200 cu ft cyl	Refilling small, aviators' breathing cylinders; shipboard welding and cutting.	Dangerous fire hazard. Do not store near combustible gases or flammable material. Keep cylinders, valves, regulators, fitting etc., free from oil and grease. NEVER LUBRICATE.
Oxygen (Technical) . .	22 cu ft cyl . . . . . . 55 cu ft cyl . . . . 100 cu ft cyl . . . . . . 200 cu ft cyl	Welding and cutting (shore use). Back pack cutting outfits. Portable emergency cutting outfits. General welding and cutting.	Same as for Oxygen (Breathing).

LOW PRESSURE GASES

Acetylene	10, 40, and 225 cu ft cyl	Welding, cutting, and heating procedures.	Highly flammable. Store cy inders upright. Keep valve closed.
Aerosol	1, 2, 5, and 40 lb cyl	Insecticide	General safe handling.
Butane	100 lb cyl	For laboratories . .	Flammable, general safe handling.

Table 4-3.—Common Gases Used by the Navy—Continued.

LOW PRESSURE GASES—Continued

Gas	Container size	Use	Precautions
Ammonia	500 lb cyl	For refrigerating systems	Guard against leakage. Isolate from other stores. Store cylinders on side in cool place. If cylinder has conventional base, store upright.
Chlorine	30, 100, 120, and 150 lb cyl	For chlorinating water supply systems.	POISON. Store cylinders upright.
Carboxide	30 and 60 lb cyl	Fumigant	General safe handling.
Refrigerant 12	10 and 50 lb cyl	Refrigerating systems	General safe handling.
Ethyl Chloride	50 lb cyl	For refrigerating systems	Highly flammable.
Ethylene Oxide	100 lb cyl	For insect control .	Flammable. Slightly toxic.
Methyl Chloride	6 and 30 lb cyl	For refrigerating systems	Combustible.
Refrigerant 22	50 lb cyl	For refrigerating systems	General safe handling.
Propane	40 and 100 lb cyl . . .	For general brazing and heating	Flammable.
Sulfur Dioxide	100 and 150 lb cyl . .	For refrigerating systems	POISON. Corrosive. Store cylinders upright.
Refrigerant 11	Bulk	For refrigerating systems	General safe handling.

acetylene is produced. In 1895, it was discovered that acetylene, combined with oxygen and burned, has the ability to produce high temperatures. By the turn of the century, acetylene was being used for lighting, both commercially and domestically. Even today acetylene is used in lighthouses and buoys because of its exceptional brilliance while burning.

Acetylene (C_2H_2) is a colorless gas. When pure it has a sweet odor, but when impure, usually with HYDROGEN SULPHIDE as an impurity, it has a disagreeable odor. (Hydrogen sulphide is the gas that produces the well-known "rotten eggs" smell.) Acetylene is shipped dissolved in liquid ACETONE in cylinders that are filled with asbestos, charcoal, cement, or diatomaceous earth. Acetone is a liquid ORGANIC compound which is used as a solvent for many other organic compounds. Roughly, an organic compound is any one that contains carbon (C); note that acetylene (C_2H_2) is an organic compound formed by combining two atoms of carbon with two atoms of hydrogen.

Acetylene is stable and safe to handle as charged in Navy STANDARD ACETYLENE CYLINDERS. But in the free gaseous state, or if compressed in cylinders NOT designed for acetylene, the gas is very unstable and likely to decompose violently. In large volumes, at pressures exceeding 15 psi, pure acetylene is dangerously explosive. Acetylene can explode spontaneously when improperly stored or handled. It does not always need air, or oxygen, or a spark to help it explode. Any shock or heat may be enough to set acetylene off if it is stored at pressures higher than 15 psi.

When acetylene is mixed with air or oxygen, the chances of violent explosion are doubled.

The explosive limits of acetylene in air, range from 3 to 12 percent acetylene by volume, with maximum effect at approximately 7.8 percent. Acetylene in copper piping systems, or in piping systems with silver-brazed joints, may form acetylides by combining with copper or silver. Acetylides so formed are violently explosive and are capable of being detonated by shock or heat.

Acetylene mixed in controlled proportions with oxygen in the acetylene torch produces an intensely hot flame. Its uses in welding and cutting are well known.

The SAFETY PRECAUTIONS for acetylene should be emphasized again and again. You will be held strictly accountable for knowing and observing the following rules, and you should make every effort to see that others handling acetylene know and observe them.

1. Acetylene should never be discharged into hose lines, manifolds, etc., at a pressure greater than 15 psi. A suitable pressure-reducing regulator should be employed on all occasions. Acetylene is inherently unstable and, at pressures greater than 15 psi, may explode violently when subjected to heat or shock.

2. Acetylene cylinders should be used or stored only in an upright position, valve end up, to avoid the possibility of withdrawing acetone when the cylinders are being discharged. Do not open the cylinder valve more than 1 1/2 turns of the spindle.

3. Do not recharge acetylene cylinders or transfer acetylene from one cylinder to another without specific approval from the Bureau of Ships. It is possible to charge or refill acetylene cylinders safely ONLY with special equipment. Acetylene cylinders contain a porous material with minute cellular spaces, so that no pockets of appreciable size remain where free acetylene in the gaseous state may collect. In addition, acetone partially fills the cellular spaces and acts as a solvent for the acetylene. While in the dissolved state, acetylene is stable. It should be clear by now that NO OTHER TYPE cylinder should be used to store acetylene gas.

4. Keep sparks and flames away from acetylene cylinders, and under no circumstances allow a flame to come in contact with the safety devices. Never allow the cylinders to contact electric welding apparatus or electrical circuits.

5. Where it is necessary to test for leaks, use soapy water.

6. Do not interchange acetylene regulators, hose, or other appliances with similar equipment intended for other gases.

7. Do not use acetylene manifolds which are not approved by the Bureau of Ships.

8. Use no wrench other than the one designed for opening the cylinder, and keep the wrench on the cylinder while it is in use.

9. Should a cylinder catch fire, use a wet blanket to extinguish the fire; if this fails, spray a stream of water on the cylinder.

Carbon Dioxide

Carbon dioxide (CO_2) is a colorless, odorless gas 1.52 times as heavy as air. It can be condensed into a colorless liquid and stored in this state, under pressure, in cylinders. When the cylinder valve is opened, gaseous CO_2 escapes and, due to the rapid drop in pressure and temperature, forms carbon dioxide snow. This snow, when compressed into blocks or cubes, is what we know as "dry ice." Dry ice, in solid form and at atmospheric pressure, volatilizes, remaining at -109° F until it has disappeared. It is excellent for certain refrigeration uses.

Because it will neither support combustion nor form explosive mixtures, CO_2 is one of the chief fire extinguishing agents in use today. It is also used for inflatable gear such as liferafts and lifevests, and as a propellant or expelling agent.

Carbonated soft drinks contain carbon dioxide dissolved in water and kept under pressure in the container. When this pressure is relieved, CO_2 bubbles rise to the surface.

Carbon dioxide has made possible improvements and a new technique in combining molding and coremaking materials. This technique is known as the Carbon Dioxide (CO_2) Process of coremaking. Silica sand and a binder of water glass (sodium silicate) are mixed together, then gased (frozen) with CO_2 for a few seconds. The carbon dioxide method of coremaking will be discussed further in chapters 8 and 9 of this training course.

When working with carbon dioxide, or working in areas where carbon dioxide may be present. you should observe all applicable safety precautions.

Small percentages of carbon dioxide will cause tiredness and perhaps headaches. Three percent in the air doubles breathing effort, and 5 percent causes panting. Eight percent causes marked distress and 10 percent causes unconsciousness very quickly.

Since CO_2, in addition to being heavier than air, is both invisible and odorless, it presents a particular hazard. It will tend to collect in low, unventilated places which might well be below decks on shipboard for instance. The fact is obvious that the more of any other gas, poisonous or not, that is present, the less breathable oxygen there will be present. Men going into these conditions or places, or left there, run the risk of suffocating.

Do not enter an area or compartment containing hazardous amounts of carbon dioxide without being equipped with a breathing mask and an independent supply of oxygen. If this is not practicable, and the case is urgent, enter only when equipped with a lifeline and with an assistant standing by outside the area or compartment.

Treatment of personnel exposed to CO_2 includes removal from the CO_2-laden atmosphere, artificial respiration (if necessary), administering oxygen, and keeping the patient warm and quiet.

Oxygen

Oxygen is a colorless, odorless, tasteless gas that makes up about 21 percent of the atmosphere. Although oxygen is found in many compounds such as, water, limestone, sand, and iron ore, it occurs as free oxygen only in the atmosphere.

Probably to humans, the most important property of oxygen is that it is the element in the air that supports life. If the required amount of oxygen is not present in the atmosphere, it is not possible for people to live. In high altitude flying, or in confined spaces, it is necessary to supply air for breathing from some outside source. One of the important uses of oxygen, therefore, is to furnish a supply to persons who would otherwise face a lack of oxygen.

Another shipboard use for oxygen is for oxyacetylene welding. When mixtures of oxgyen and acetylene burn, they furnish a very high heat which is easily controlled. This type of heat is also used to heat-treat metals.

Oxygen is normally shipped in a gaseous state in cylinders. There are two types: (1) aviator's breathing oxygen (99.5 percent pure oxygen) and (2) technical or industrial oxygen. THE NAVY BUYS ONLY AVIATORS' BREATHING OXYGEN. This not only simplifies the supply system but eliminates the possibility of industrial oxygen being charged into aviators' breathing apparatus. Industrial oxygen may have a small moisture content which would freeze at high altitudes.

Oxygen plants are installed on all CVA's and in some other type ships.

Other Gases Stocked By The Navy

The gases noted here are in sufficient stock in the Navy to warrant mention in this training course. The listing is alphabetical and in no way indicates the relative volumes used or importance of these gases.

AEROSOL (INSECTICIDE).—Aerosol, as charged in standard Navy cylinders, is a safe nonflammable material, having a maximum of 22 percent nonvolatile ingredients by weight, and is of the following general composition:

Pyrethrum extract, 2 percent. DDT (dichlorodiphenyltrichloroethane), 3.0 percent.

Solvent for DDT, 15 percent.

R-12 (dichlorodifluoromethane), 80 percent.

Though aerosol is safe and nonhazardous to personnel as normally used, it has toxic properties if inhaled in sufficient quantities. This is indicated by the fact that aerosol is lethal to small birds, fish, and low-order forms of life.

AIR (COMPRESSED).—Compressed air, as charged in Navy-owned cylinders, is normally oil free, and when supplied by the Naval Shipyard at Norfolk or Puget Sound, is dried and suitable for use in applications where a low water vapor content is necessary.

The safety precautions with regard to compressed air are much the same as for the other compressed gases. Of course, compressed air is neither poisonous nor flammable, but at the same time you should not become careless in handling it. Compressed air tanks, lines, and fittings have exploded, injuring man and property. Literally thousands of careless men have blown dust or harmful specks into their eyes by the careless handling of compressed air outlets. Because compressed air seems so safe in comparison with the other gases, do not let overconfidence lead to your own or someone else's injury.

ARGON.—Air, as was mentioned earlier, is a mixture whose volume consists mostly of oxygen (21 percent) and nitrogen (78 percent). The remaining 1 percent is made up of argon (0.94 percent) and traces of other gases such as neon and helium. Argon is slightly heavier than the rest of the air with which it is mixed. Argon is an inert element; that is, it will not combine with other substances. Accordingly argon will not burn, will not support combustion, and will not explode. As far as we are concerned argon is just pure filler material, neither affecting nor being affected by anything around it. This inertness of argon invests it with certain special advantages. Its most common use is in electric light bulbs where the tungsten filament is surrounded by the argon. This prevents the filament from burning out as fast as it would in air, or in a vacuum, or in a nitrogen-filled bulb. Argon also is used in discharge illumination tubes (similar to neon tubes) and gives off a blue-violet color. These uses are only indirectly related to the Navy's industrial operations. The main use of argon in the Navy will probably be in the field of INERT-GAS SHIELDED METAL ARC WELDING.

A word might be said about inert-gas shielded metal arc welding. Since an inert gas will not burn, sustain combustion, or combine in any way with the hot materials being welded, such a gas (like argon or helium) has an invaluable use as a "protective blanket" around the immediate area being welded. The inert gas protects the welding area from the atmosphere and hence prevents the formation of any unwanted oxygen or nitrogen compounds of the metal being welded.

Since argon is inert, and usually stored in small quantities, there are not as many safety precautions to observe in relation to this gas. However, the same care must be given it as must be given any other gas under high pressure. Though it is not poisonous, it definitely will not support life, hence you must be careful never to confuse it with air or oxygen breathing tanks.

CARBOXIDE.—Carboxide is the trade designation for a gaseous mixture of 90 percent CO_2 and 10 percent ethylene oxide. As a mixture, these gases are not flammable in air, but ethylene oxide by itself is explosive in air. Carboxide is commonly used as a fumigant throughout the service. It is obtainable, compressed to a liquid, in steel cylinders. When used, carboxide comes out of the cylinders as a fine spray or mist which vaporizes. Since carboxide is 1.52 times as heavy as air, it settles in low places. For information regarding its characteristics and applicable safety rules, see the sections of this chapter relating to carbon dioxide and ethylene oxide.

CHLORINE.—Chlorine (Cl_2) is a heavy gas, 2.44 times as heavy as air, and is greenish-yellow in color. It is not flammable, but will react violently with ammonia or hydrogen. It has a highly disagreeable and irritating odor and is very poisonous. It was used as an antipersonnel gas in World War I. At normal pressures and temperatures it is a gas, but it is shipped as a liquid in steel cylinders. The Navy purchases all its chlorine already bottled from civilian manufacturers.

The military uses of chlorine are for water purification, sewage disposal, and in the preparation of bleaching solution.

Chlorine should be used only by experienced and properly trained personnel. Where chlorine is used, good ventilation should be maintained and exposed personnel should be furnished with protective masks approved for protection against chlorine. Where necessary, the presence of chlorine may be detected by using a cloth wet with AQUA AMMONIA (ammonia water); the ammonia in the presence of chlorine will produce white fumes.

If it is necessary to immerse chlorine cylinders in a bath of warm water to facilitate discharge, extreme care must be taken not to generate a dangerous pressure in the cylinders. Be sure to maintain the temperature of the water below 130° F, lest the fusible plugs in the cylinder melt. In no event should the cylinder valve be submerged, nor should more than 20 percent of the surface area of the cylinder be under water.

If personnel are exposed to chlorine fumes: Start artificial respiration immediately, IF the person is not breathing. Patients should be kept warm and quiet; cover with blankets if necessary. Rest is essential. Place the patient on his back with the head and chest elevated. Call the medical officer immediately. Splashes of liquid chlorine, or chlorinated water, may cause skin irritation and burns. If you are splashed, remove clothing immediately and wash exposed part of skin with copious amounts of water or soapy water.

ETHYL CHLORIDE.—Ethyl chloride (C_2H_5Cl) is a gas composed of carbon, hydrogen, and chlorine. It is a colorless, somewhat flammable gas known also as monochlorethane. Ethyl chloride is a gas at room temperature and pressure. It is poisonous if absorbed in sufficient quantity.

Medically ethyl chloride is used during minor operations in the form of a spray to produce local anesthesia by freezing. The rapid evaporation of the gas cools the skin to freezing, after which the flesh may be cut without pain. It is also used as an inhalant anesthetic for minor operations or for putting a patient to sleep before administering ether.

The Navy purchases all its ethyl chloride as a colorless liquid compressed in cylinders. Ethyl chloride becomes a liquid at 54.5° F, and therefore is not hard to liquefy by cooling.

The principal use of this gas is as a refrigerant. The same general safety rules apply to it as to the other combustible gases. These rules are the same as those outlined in this chapter for acetylene. However, there is no extreme explosive hazard attached to ethyl chloride at pressures above 15 psi as there is to acetylene.

ETHYLENE OXIDE.—Ethylene oxide(C_2H_4O), a compound of carbon, hydrogen, and oxygen, is approximately 1.52 times as heavy as air. It is flammable and explosive. Its explosive limits in air are from 3 to 80 percent by volume. It is slightly toxic and, if present in any appreciable volume, is an asphyxiant. Its primary uses are for insect control and for the manufacture of carboxide. Ethylene oxide is an excellent fumigant, for not only is it just slightly poisonous to man, but it will not harm delicate materials, textiles, foodstuffs, grain, and other similar materials.

Ethylene oxide safety rules are practically the same as those for acetylene, but ethylene oxide may be handled at pressures above 15 psi. Ethylene oxide is shipped as a liquid in steel cylinders.

HELIUM.—Like argon, helium is an inert gas. It is extremely light in weight. Only hydrogen is lighter than helium. Helium is colorless, odorless, and completely nonflammable and nonexplosive. It is particularly valuable for use in lighter-than-air aircraft, for while its lifting power is less than that of hydrogen, there is no fire hazard.

Helium is used for inflation of lighter-than-air aircraft, barrage balloons, and aerological balloons. It is used in inert-gas shielded metal arc welding. It is also used in inert gas applications similar to those for which nitrogen is used, such as optical instrument work; for example, helium is used to fill spaces between lenses of such fine optical instruments as submarine periscopes, for purposes of both protection and increased accuracy. Helium is also used for breathing purposes, in mixtures with oxygen, by divers and caisson workers to help prevent the "bends."

Helium safety precautions are similar to those for argon and compressed air.

HYDROGEN.—Hydrogen (H_2) is the lightest of all elements. It is odorless, colorless, and nonpoisonous. Hydrogen is extremely flammable. Mixtures of hydrogen and air containing between 5 and 75 percent of hydrogen by volume will explode when brought in contact with anything red hot. Pure hydrogen, if burned in air from a suitable burner, has a bright yellow flame. A mixture of hydrogen and air with less than 10 percent of hydrogen by volume, if likewise burned from a suitable burner, has an almost invisible blue flame.

Hydrogen is used in welding, in underwater cutting operations, and for inflation of barrage balloons. The oxyhydrogen torch is used underwater in lieu of the oxyacetylene torch because of the explosive hazard involved in using acetylene at pressures in excess of 15 psi. The oxyhydrogen process, however, is gradually being replaced by the arc-oxygen cutting process.

The same safety rules apply to hydrogen as apply to acetylene, except that pressures over 15 psi may be used, and great care must be taken to guard against leaks. Hydrogen has a way of leaking through all but the best fittings. Never use a flame to detect leaks. Use soapy water or, during freezing weather, linseed oil. Store the cylinders in a well-ventilated place separated by a fire-resistant partition; never store hydrogen cylinders near oxygen cylinders.

LIQUID PETROLEUM GASES—BUTANE, PROPANE.—Liquid petroleum gases are usually colorless and odorless in their normal state. It is common practice to odorize these gases artificially to provide for quick detection of leaks and thus to safeguard personnel. The odor agent usually employed causes a "rotten cabbage" smell. Propane and butane are not poisonous, although their fumes have an intoxicating effect similar to that received from gasoline fumes. They are flammable when mixed with air in certain proportions (2 to 7 percent), and under certain conditions may, when ignited, cause explosions similar to those produced by gasoline. Since they are heavier than air, they will settle in low levels. They are primarily used for domestic cooking, hot water heating, and refrigeration. Industrially they are used with oxygen in the same manner that acetylene is used for cutting metals. They are, however, not as fast, since they produce a lower temperature with the oxygen in the preheating flame than the oxyacetylene flame. Aboard ship, liquefied petroleum is used principally in medical and dental laboratories.

The liquid petroleum gases are purchased from commercial sources by the Navy. Safety precautions for their use are the same as precautions for acetylene, except that these gases may be piped at pressures over 15 psi.

METHYL CHLORIDE.—Methyl chloride (CH_3Cl) is a colorless, noncorrosive gas which is transparent in both the gaseous and liquid states. It has a faintly sweet, etherlike odor. It is not irritating to the eyes or lungs, but has an anesthetic effect if breathed. It is flammable and presents a moderate explosive hazard. The explosive limits of methyl chloride in air are from 8.1 to 17.2 percent. It is used principally for refrigeration.

Methyl chloride is a solvent for most organic materials; so composition gaskets used with it must be selected carefully. In general, they should not contain rubber or neoprene. Pressed asbestos and metallic gaskets may, of course, be used. The Navy purchases its methyl chloride from commercial sources.

The safety precautions for methyl chloride are practically the same as for acetylene, except that pressures above 15 psi may be used. Sometimes 1 percent ACROLEIN, a highly irritating gas, is added as an indicating agent; then gas leaks are very noticeable, stinging the nose and eyes. Methyl chloride does not harm most articles of food, but it definitely should not be breathed in any concentration or for any length of time. A 2-percent concentration breathed for over 2 hours will cause death, while only a few breaths of higher concentration can lead to a dangerous loss of consciousness.

NITROGEN.—For our purposes, nitrogen (N_2) is considered to be an inert gas. It is not completely inert like helium or argon, for there are many nitrogen compounds such as the nitrates used in fertilizers and explosives. However, nitrogen is very slow to combine chemically with other elements under normal conditions. This is clearly seen when you consider that four-fifths of the atmosphere is nitrogen. Unlike oxygen, nitrogen, as a gas, does not support life or combustion, and causes no decomposition of most of the things with which it comes in contact. By chemical and electrical processes it can be, and is, taken from the air and combined with other substances. Such processes are known as "nitrogen-fixation."

In the Navy, nitrogen is used for pressure-operated mechanisms such as recoil systems, as an expellent in flamethrowers, in optical instrument applications, for testing pipelines, and as a gas-blanket if required (as in atmospheric controlled furnaces), and for preservation packing. Nitrogen for naval use is pumped by a water-lubricated compressor and is specially dried. Nitrogen cannot be used for inert-gas shielded metal arc welding because the high temperatures involved can cause nitrogen to combine with other substances.

Nitrogen is slightly lighter than air, and, as indicated, is neither flammable nor explosive. It is not poisonous, but unless oxygen is mixed with it, it is an asphyxiant. Nitrogen gas is obtained by the fractional distillation of air. On aircraft carriers, nitrogen is a byproduct of the oxygen plant. The nitrogen is utilized extensively on these ships for maintaining an inert blanket over aviation fuel and other special fuels in their respective storage tanks.

The safety precautions for nitrogen are similar to those for argon, helium, and compressed air.

NITROUS OXIDE.—Nitrous oxide, or nitrogen monoxide (N_2O), is a colorless gas with a pleasant odor and a sweetish taste. It has also been called "laughing gas" because it may cause bursts of laughter when inhaled. It is used as an anesthetic and is particularly useful for obtaining anesthesia rapidly for operations of short duration.

The safety precautions for nitrous oxide are the same as for any other nonflammable, nonexplosive, compressed gas. Since it can cause anesthesia, and death if breathed in large amounts, care must be taken not to inhale it accidentally.

CYLINDER DESIGN AND SIZE

Gas cylinders are made of high quality steel. For high pressure gases, such as oxygen and hydrogen, cylinders are of seamless construction. For low pressure gases, such as acetylene, the cylinders may be welded or brazed. All cylinders are carefully tested at pressures above the maximum permissible charging pressure.

Gas cylinders are substantially the same, except those for acetylene. Acetylene cylinders are completely filled with a porous material impregnated with acetone, which acts as a solvent; and are stubby, rather than slender, as shown in figure 4-19. All gas cylinders have safety devices either in the valve or in the shoulder or bottom of the cylinder, or in a combination of these places.

One type of safety device is the fusible plug, which may be described as a threaded hex head plug, having a center filled with a fusible metal. If the cylinder should be subjected to high temperatures, the fusible metal will melt, allowing the gas to vent to the atmosphere.

Unbacked safety devices with rupture disks consist of a perforated safety cap covering a safety port. The cap retains a frangible disk firmly over the safety port. Under excessive pressure, the safety disk ruptures, allowing the gas to escape through the port.

Backed safety devices with rupture disks have a frangible disk supported by fusible metal (contained in the safety cap) blocking off escape ports. If the cylinder becomes heated above the melting point of the fusible metal, the pressure in the cylinder will increase and the frangible disk will rupture, venting the gas to the atmosphere.

To protect the valve, a threaded valve protection cap screws onto the cylinder neck ring.

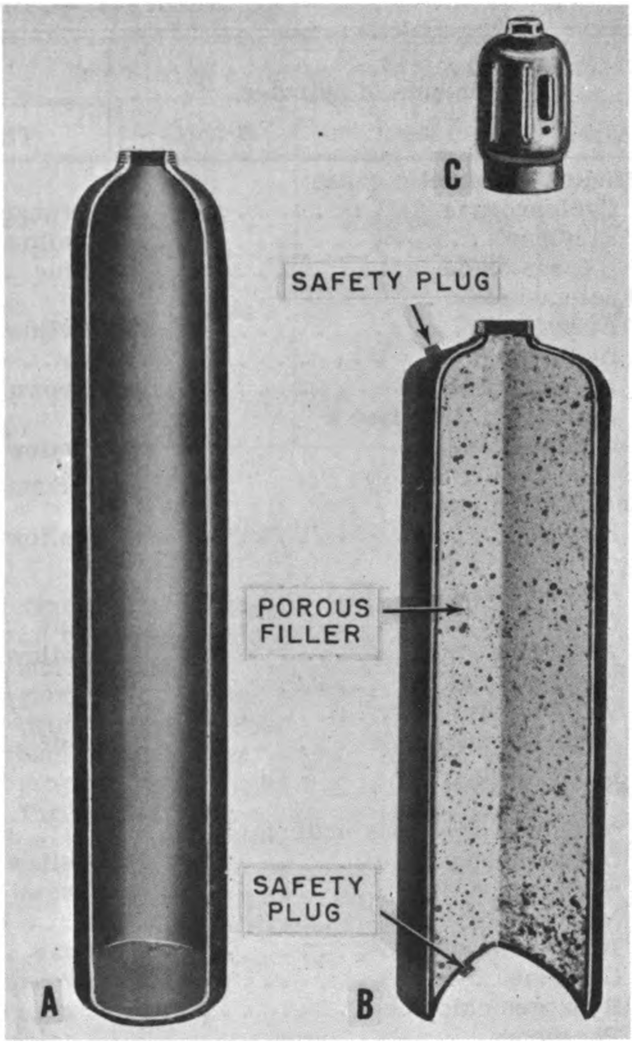

47.163

Figure 4-19.—Cutaway view of compressed gas cylinder. A. Oxygen cylinder. B. Acetylene cylinder. C. Valve protection cap.

Identification

Gas cylinders used by the Navy, Army, and Air Force carry certain standard identifying features in addition to markings required by the Interstate Commerce Commission. So much injury and damage can be, and has been, caused by mistaking one gas cylinder for another, that a national program has been established to make it almost impossible to confuse cylinders. Under this program, the identifying features used by the Armed Forces consist of a color code for painting the cylinders, stenciling the name of the gas along two sides of the cylinder, and affixing two decalcomanias to the shoulder of each cylinder. The official color code for marking compressed gas cylinders is given in MIL-STD-101. The color coding is revised from time to time. In checking the cylinder color code, always be certain you have the latest revision including ALL page changes.

Navy-owned gas cylinders are identified by indented serial numbers, preceded and followed by the letters USN. Navy serial numbers are augmented by a DESIGNATED LETTER preceeding the numerals. This letter identifies the cylinder in respect to the specific gas contained

Table 4-4.—Cylinder Color Code.

Contents of cylinder	Location of cylinder markings*			
	Top A	Band B	Band C	Body
Medical anesthetic gases:				
Cyclopropane	Orange	Yellow	Blue	Blue
Ethylene	Yellow	Blue	do	do.
Nitrous oxide	Blue	do	do	do.
Fuel gases:				
Acetylene	Yellow	Yellow	Yellow	Yellow
Hydrogen	do	Black	do	do.
Manufactured gases	Brown	Yellow	do	do.
Petroleum (liquefied & nonliquefied)	Yellow	Orange	do	do.
Industrial gases:				
Butadiene	Yellow	White	Buff (tan)	Buff (tan)
Ethylene oxide	do	Blue	do	do.
Ethyl chloride	Buff	do	Yellow	do.
Propylene	Yellow	Gray	Buff	do.
Vinyl chloride	do	Orange	do	do.
Vinyl methyl ether	do	Black	do	do.
Aerosol insecticide	Buff	Buff	do	do.
Carboxide	do	Blue	do	do.
Toxics and poisonous materials:				
Carbon monoxide	Yellow	Brown	Brown	Brown
Hydrogen sulfide	Brown	Yellow	do	do.
Methyl bromide	do	Black	do	do.
Boron trifluoride	Gray	Brown	do	do.
Chlorine	Brown	do	do	do.
Hydrogen chloride	do	White	do	do.
Phosgene	do	Orange	do	do.
Sulfur dioxide	do	Gray	do	do.
Refrigerants:				
Ammonia	do	Yellow	Orange	Orange
Freons	Orange	Orange	do	do.
Methyl chloride	Yellow	Brown	do	do.
Oxidizing gases:				
Oxygen	Green.	Green	Green.	Green
Oxygen, aviator's	do	White	do	do.
Air, oil pumped	Black	Green	do	Black
Air, water pumped	do	do	Black	do.
Helium-Oxygen	Buff	White	Green	Green
Oxygen-Carbon dioxide	Gray	do	do	do.
Inert gases:				
Argon, oil pumped	do	do	White	Gray
Argon, water pumped	do	do	Gray	do.
Carbon dioxide	do	Gray.	do	do.

*Note: See figure 4-21 for location of cylinder markings.

Table 4-4.—Cylinder Color Code—Continued

Contents of cylinder	Location of cylinder markings*			
	Top A	Band B	Band C	Body
Inert gases:—(Cont'd)				
Helium, oil pumped	do	Orange	do	do.
Helium, oil free	Buff	Gray	do	do.
Nitrogen, oil pumped	Gray	Black	Gray	do.
Nitrogen, water pumped	do	do	Black	do.
Fire fighting gases:				
Carbon dioxide	Red	Red	Red	Red
Methyl bromide	do	Brown	do	do.

*Note: See figure 4-21 for location of cylinder markings.

in that specific cylinder. The following are examples of serial numbers:

1. For an oxygen cylinder
   U U
   SX618793S
   N N
2. For an acetylene cylinder
   U U
   SA54687S
   N N

In the first example, the letter "X" identifies the cylinder as one containing oxygen. In the second example, the letter "A" identifies the cylinder as an acetylene cylinder. The LETTERS assigned to gases are for identification purposes only, they have no consistent connection with spelling of a gas name or CHEMICAL SYMBOLS for gases. The acetylene symbol is C_2H_2, and for oxygen the correct chemical symbol is O_2.

If the camouflage scheme of a ship is adversely affected by the cylinder colors, canvas covers painted with the camouflage colors shall be put over the cylinders.

Shatterproof cylinders shall be stenciled in two locations with the phrase "Non-shat" placed longitudinally and at a 90° angle from titles. Letters shall be black or white and approximately 1 inch in size.

Color Code For Cylinders

The use of color coding for compressed-gas cylinders is mandatory. Identifying colors are assigned by the Standardization Division, Office of the Assistant Secretary of Defense (Supply and Logistics). Cylinders which have a background color of yellow, orange, or buff have the title painted in black. Cylinders which have a background color of red, brown, black, blue, gray, or green have the title painted in white. Figure 4-20 shows how cylinders are identified by the overall painted color code and by the stenciled name of the gas. Figure 4-21 shows the location of the color pattern on gas cylinders. The arrangement of the colors will appear as shown in table 4-4.

Decalcomanias

As a further identification measure, two decalcomanias (decals) are applied to the shoulder of each cylinder. These decals are placed opposite each other, as shown in figure 4-22. The decals indicate the name of the gas and brief precautions for its handling and use. They are obtainable from general stores for each gas in use by the Navy.

HANDLING AND STOWING OF GAS CYLINDERS

It must be constantly remembered that all compressed gases are hazardous. Many detailed precautions could be set down with regard to the handling and stowing of these gases. The precautions to be followed vary somewhat for stowage cylinders and ready service cylinders.

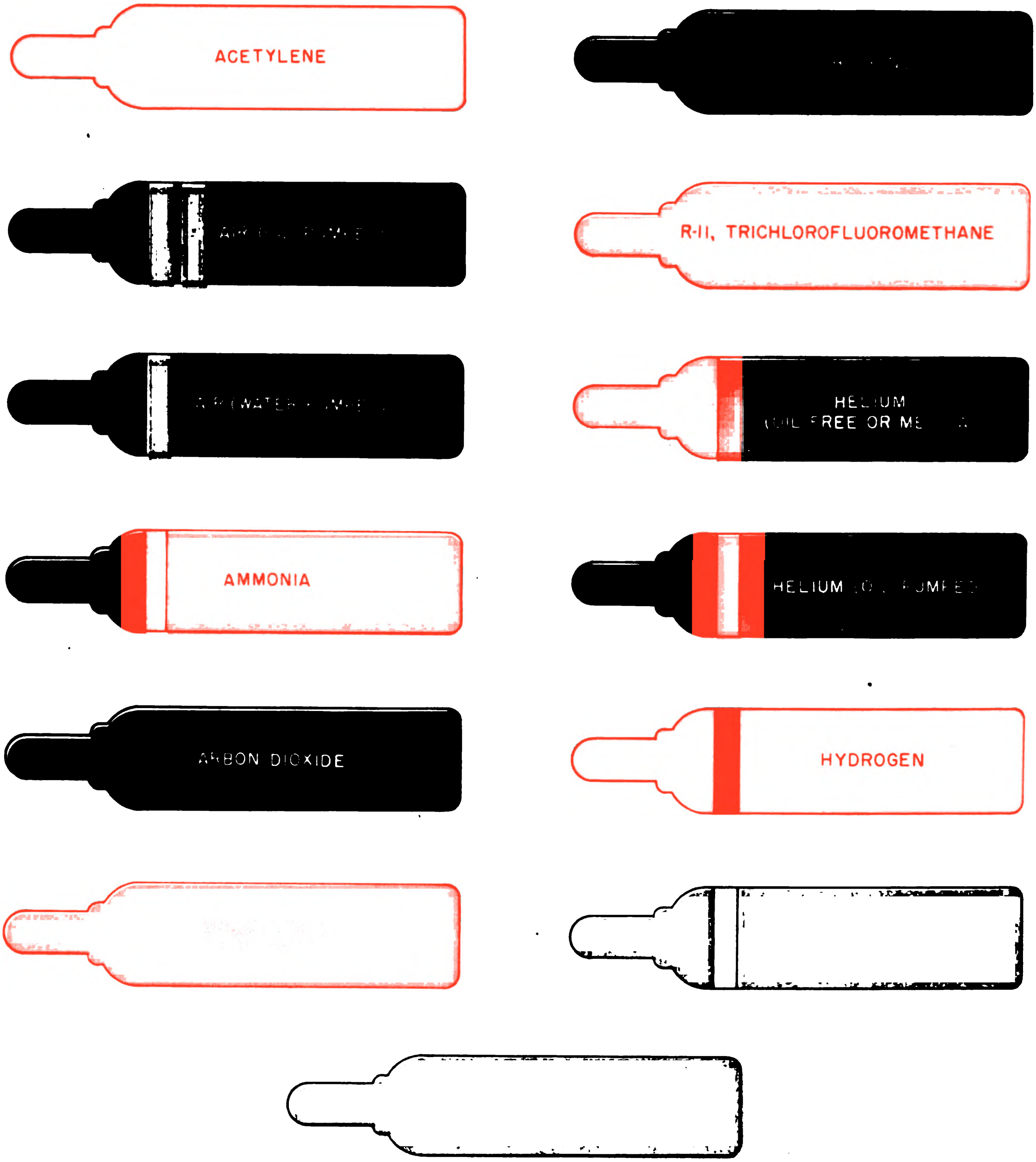

54.9

Figure 4-20.—Identifying color patterns for gas cylinders.

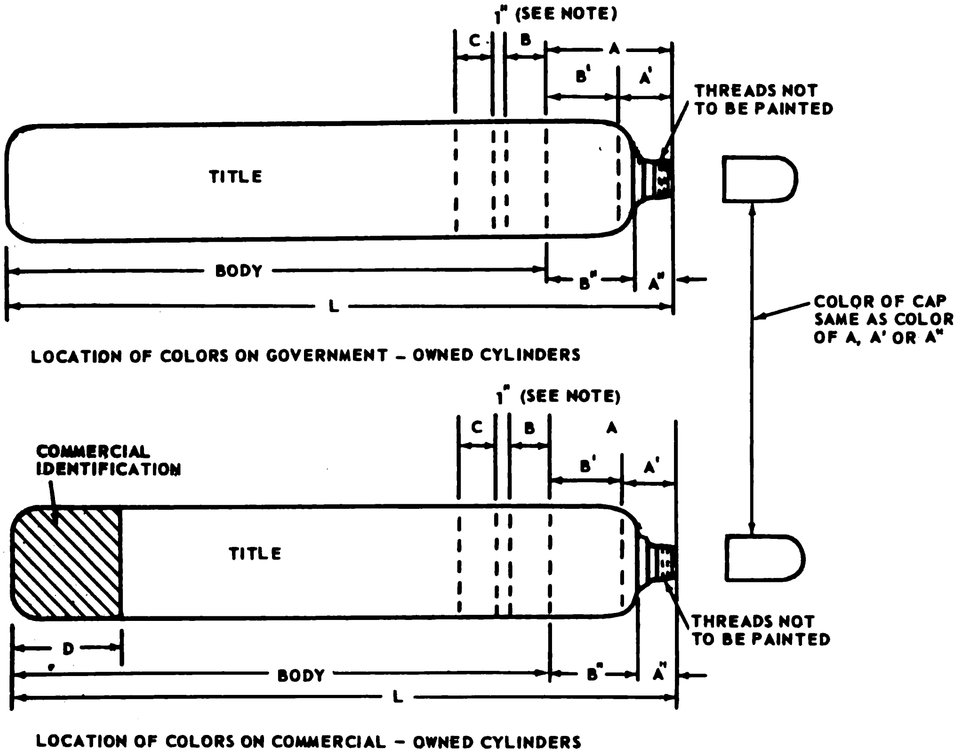

LOCATION DIMENSIONS

ON CYLINDERS FOR MEDICAL GAS MIXTURES, 1" SPACE AND BAND C ARE LOCATED IMMEDIATELY BELOW BANDS B' OR B"

CYLINDERS FOR	OVERALL LENGTH	SHOULDER COLOR(S)			CYLINDER COLOR BAND (S)				COMMERCIAL IDENTIFICATION
		A	A'	A"	B	B'	B"	C	D
MEDICAL GAS MIXTURE	OVER 30"	L/5	3½"	—	—	A LESS 3½"	—	3"	L/6
OTHER GASES	"	L/5	—	—	3	—	—	3"	L/6
MEDICAL GAS MIXTURE	30" AND UNDER	L/5	—		—	—	A LESS A"	2"	L/6
OTHER GASES	"	L/5	—	—	2	—	—	2"	L/6

FROM CYLINDER TOP TO BOTTOM OF NECK RING

NOTE: 1" SPACE TO BE OMITTED IF BANDS B & C ARE OF DIFFERENT COLORS

102.24

Figure 4-21.—Location of color pattern on gas cylinders.

102.25

Figure 4-22.—Standard decals for Navy gas cylinders.

The term "stowage" as used in the following paragraphs refers to articles under the cognizance of the supply officer, in general stores, to be drawn on for the ship's own use, or articles of cargo being transported. It does not refer to cylinders that have been removed from stores or from cargo and transferred to the shops or other locations for use.

The term "ready service" refers to cylinders or other articles which have been transferred from stores and are actually located in a shop or near a place where they are to be used. It is not necessary that the articles be in actual use, but that they be ready for use.

Handling Cylinders

Cylinders that contain flammable and/or explosive gases must be handled with extreme care. Every effort should be made to avoid dropping cylinders or allowing them to strike forcefully against each other or any other object. Every precaution must be taken to prevent bumping or striking the discharge valves.

When cylinders are being handled, the cylinder valve outlet cap and the cylinder valve protecting cap must be in place. Unless ready service cylinders are secured in special portable racks, regulators must be removed and caps replaced before the cylinders are moved to a new location.

When loading or transferring cylinders, especially when using a crane or derrick, the cylinders must be secured in a cradle, suitable platform, rack, or special container such as a sandbag. Electromagnets must never be used. A cylinder moved by hand should be tilted slightly and rolled on its bottom edge, without dragging or sliding. Hooks or lines through the valve protection cap must NOT be used for hoisting cylinders. Cylinders frozen to the deck, or otherwise fixed, must NOT be pried loose with crowbars or similar tools.

When gas cylinders are transported on a handtruck, they must be held securely in position. The handtruck should be fastened to a bulkhead or stanchion as soon as the destination is reached. The handtruck should be constructed as follows:

1. Frame sufficiently rigid to permit handling with tackle.
2. Grips or handles ending in a vertical line with the aft side of the wheels; this facilitates fastening to a bulkhead.
3. Platform fitted with sides to prevent cylinders from sliding off.
4. Metal strap clamps provided in lieu of chains for retaining the top of the cylinders in place.

Stowage of Compressed Gases

In general, weather-deck stowage will be provided for flammable and explosive gases. However, in specific cases, below-deck stowage is approved, depending on the particular type, mission, and arrangement of the ship; these approved locations are shown on the ship's plans.

Compressed gases aboard all ships, except cargo ships, should be stowed only in compartments designated by BuShips, as shown in applicable plans for the ship. In such cases, the following precautions must be observed:

1. Necessary steps should be taken to prevent the maximum temperature of the stowage compartment from exceeding 130° F.
2. When provisions are made for mechanical ventilation, this ventilation should be operated in accordance with the damage control classification assigned. The classification for closure of this system is "Z" or "W."
3. In compartments designated for the stowage of flammable or explosive gases, the installation of portable electric wiring and equipment is not permitted.
4. Flammable materials, especially grease and oil, must be kept out of the stowage space.
5. Each cylinder (except ammonia cylinders without conventional bases) must be securely fastened in the vertical position (valve end up) by such means as metal collars. On cargo ships, fitted especially for cylinder transport, other arrangements are approved.
6. Oxygen and chlorine must be stowed in compartments separate from flammable gases. Inert or nonflammable gases may be stowed in any compartment designated for compressed gas stowage.
7. Compartments containing compressed gases must be ventilated for 15 minutes prior to entry in the event that ventilation has been closed down; a suitable sign to this effect should be posted on the outside of the access door.

When compressed gas is stowed on the weather deck, the following additional precautions must be observed:

1. Oxygen and chlorine cylinders must not be in close proximity to the fuel-gas cylinders.

2. Cylinders containing compressed gases should be stowed in such a way that they will be protected insofar as practicable. During the winter, cylinder valves must be protected against the accumulation of snow and ice. Warm water (not hot) should be used to thaw ice accumulations in cylinder valve caps and outlets. During the summer, cylinders must be screened from the direct rays of the sun.

3. Every effort should be taken to prevent corrosion of threaded connections of cylinders in stowage for extended periods of time. The use of grease or flammable corrosion-inhibitors on oxygen cylinders is not permitted.

4. The stowage area should be as remote as practicable from navigating, fire control, and gun stations.

Ready Service Storage Rules

1. Cylinders in actual use, or attached to welding, firefighting, medical, refrigeration, or similar apparatus, ready for use, are permitted below decks outside of the stowage compartment.

2. The following special precautions shall be taken with oxygen and fuel-gas cylinders for welding:

a. The necessary cylinders of gas to equip each authorized gas-cutting and gas-welding position may be installed in shops. The number of authorized positions will be determined from either a BuShips approved plan or the machinery specifications for the shop concerned.

b. Cylinders shall be securely fastened in a rack which in turn shall be securely fastened to the bulkhead at the designated location.

c. Cylinders attached to, and spare cylinders for BuShips approved damage control equipment may be stowed below decks in repair lockers.

d. Welding units may be removed from the designated stowage location in order to perform work at some remote location in the ship, but shall be returned to the designated stowage location immediately upon completion of work. The equipment must not be left unattended while away from its regular stowage.

e. A card showing the following shall be posted at the designated stowage location of each unit: UNIT IS NOT SECURE WHILE PRESSURE SHOWS ON GAGES, OR WHEN CYLINDERS ARE NOT FIRMLY FASTENED TO RACK OR TO BULKHEAD, OR WHEN RACK IS NOT FIRMLY FASTENED TO BULKHEAD. IF REMOVED FROM THIS LOCATION, THIS UNIT IS TO BE CONSTANTLY ATTENDED UNTIL RETURNED AND SECURED.

See Bureau of Ships Technical Manual, chapters 23 and 92 for detailed precautions.

f. A card showing the following shall be attached to each unit: RETURN TO (DESIGNATED LOCATION) IMMEDIATELY ON COMPLETION OF WORK. UNIT SHALL NOT BE LEFT UNATTENDED WHILE AWAY FROM ABOVE LOCATION. UNIT IS NOT SECURE WHILE PRESSURE SHOWS ON GAGES, OR CYLINDERS ARE NOT FIRMLY FASTENED TO RACK, OR RACK NOT FIRMLY FASTENED TO BULKHEAD OR STANCHION.

See Bureau of Ships Technical Manual, chapters 23 and 92 for detailed precautions.

3. Fire extinguishers employing gases, fire-extinguishing cylinders permanently connected to fixed fire-extinguishing systems, and chemical canisters for oxygen breathing apparatus may be stowed in the vicinity in which they would be used.

DISPOSITION OF EMPTY CYLINDERS

Empty cylinders should be delivered to the nearest naval supply depot with valves closed and under some positive pressure, except where the design of the valve does not permit closing, as with fire extinguishers. The pressure is necessary to prevent condensation of atmospheric moisture on the internal walls, and, in the case of acetylene cylinders, to prevent loss of the solvent (acetone) and/or entry of air, should the cylinders cool considerably below the temperature at which they were discharged.

Cylinders used for aviators' breathing oxygen, dry nitrogen, argon, or dry air, which are found to have open valves and/or a positive internal pressure of less than 25 psi, should be tagged with the explanation that they must be dried before refilling.

CHAPTER 5

FURNACES

The skills of the Molder are as varied as the different styles of jobs he may be called upon to perform. In addition to the knowledge required to make a satisfactory mold to produce a sound, usable casting, the Molder should be familiar with the different styles, construction, principles of operation, maintenance, and melting practices of the various furnaces in use aboard Navy repair ships and tenders, and at shore-based foundries.

Many satisfactory general purpose castings are produced with the cupola and oil-fired furnace. For some special applications, these melting units are not satisfactory because they lack adequate temperature control, or do not lend themselves to the incorporation of certain alloying elements. A demand by industry and government for uniform, high quality castings having a special composition, brought about the development of melting methods in which a high degree of temperature and casting composition control is possible. Melting units lending themselves to adequate temperature control are the modern electric furnaces.

The three types of electric furnaces in use aboard Navy repair ships and at shore-based foundries are the rocking indirect-arc furnace, the rocking electric-resistor furnace, and the high-frequency induction furnace. The design features and operating principles are the same for all electric furnaces of a given type, regardless of the differences in melting capacity. There might be some differences in the techniques for relining of the furnace, since the large furnaces require greater amounts of refractory and insulating materials than do the smaller furnaces.

In addition to the three types of electric furnaces used to produce castings, general purpose castings of nonferrous metals and alloys can be produced by using an oil-fired furnace as the melting unit. This type of furnace is found aboard ships having limited facilities for the generation of power. Although these melting units do not lend themselves to adequate temperature control, nor to the incorporation of certain alloying elements, they are satisfactory for producing brass, bronze, and low melting point alloys. They are not suitable for melting steel, because the combustion of oil will not provide the required temperatures for melting and pouring. The time required and the amount of fuel consumed make the use of the oil-fired furnace for melting cast iron extremely expensive, hence its use is not a recommended practice.

With these four types of furnaces, Navy Molders have at their disposal equipment capable of melting all common metals and alloys. And further, they have the means to produce metals and alloys for castings equal in quality to any produced elsewhere in the world.

The construction, control stations, operation and maintenance, and melting practices of the various furnaces that the Navy Molder should be acquainted with are described in this chapter.

ROCKING INDIRECT-ARC ELECTRIC FURNACE

The rocking indirect-arc electric furnace is just what its name implies. The source of heat is the electric arc, but it is called indirect-arc because the arc does not make contact with the metal to be melted. Heat is radiated from the arc onto the metal; a secondary source of heat is the refractory lining, which is itself heated by the electric arc. The rocking action of the furnace serves to expose a greater surface of the lining to the heat of the arc, and in this way delivers more heat to the metal. The rocking action helps to mix the molten metal, and produces a more uniform heat throughout the mass.

During operation, the rocking indirect-arc furnace makes a distinctive cracking sound.

This sound is caused by an electric current jumping the gap between the ends of two carbon electrodes. It's the kind of sound that might be emitted by a giant electric-welding arc. This characteristic cracking and snapping sound readily distinguishes an operating indirect-arc furnace from another type of electric furnace—the electric-resistor furnace.

CONSTRUCTION

The furnace itself is a steel shell or barrel, with heavy-duty refractory lining, and with a vertically mounted ring track, or wheel-like steel rim, attached to each end of the barrel. The ring track, in turn, is mounted upon the supporting base structure. The steel shell has a charging door where the metal is put into the furnace, and a spout through which the molten metal is poured.

A power panel located near the furnace is provided with a knife switch for lighting off or securing the furnace. The power comes from a transformer that steps down the 440-volt current delivered by the generator to 100 volts. The power input to the furnace is controlled on the power panel, as is electrode regulation.

The SUPPORTING STRUCTURE of the furnace consists of a bed plate, or base, and two uprights, as shown in figure 5-1. Each upright has two flanged rollers upon which the ring track rests. Both the rollers on one upright are free to revolve in either direction; that is, they are what is known as idlers. On the other upright, one roller is an idler, and one is a driver. The weight of the barrel or steel shell, and of its contents, is transmitted through the ring track to the supporting structure. The two electrode brackets, connected by cables to the power panel and provided with a connection for circulating water through the electrode clamps, are also supported by the uprights. When the electrodes are mounted on these brackets, they are centered on the axis of the barrel. The

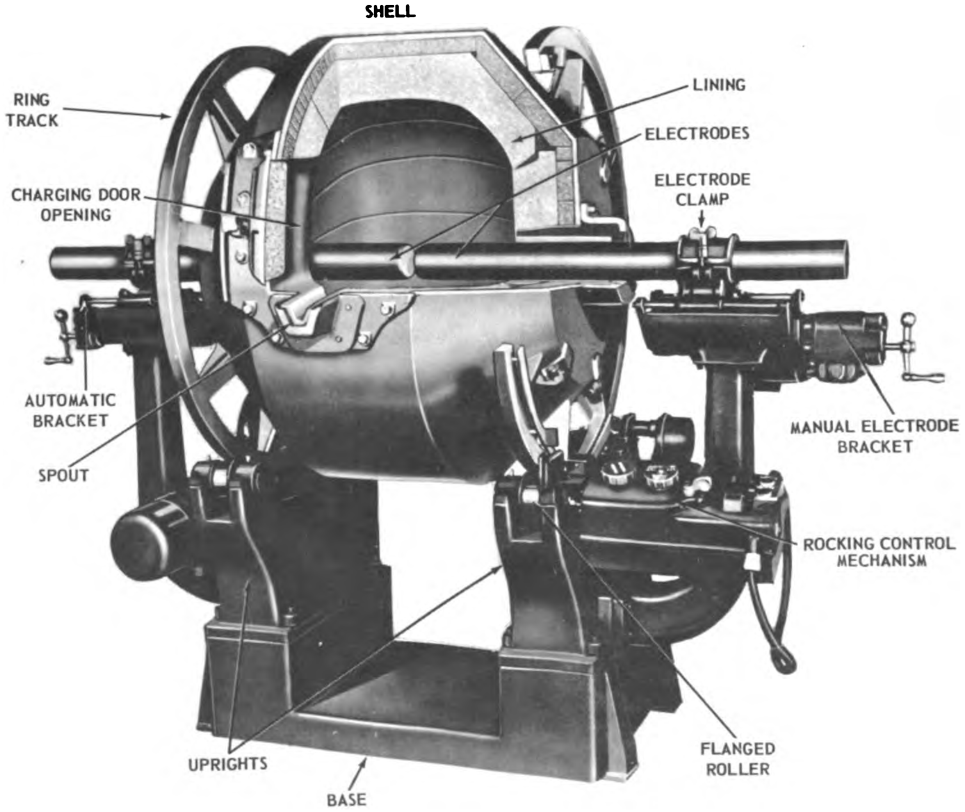

102.26X

Figure 5-1.—Rocking indirect-arc furnace brackets provide a means for moving the electrodes in and out of the furnace.

The furnace LINING must be of refractory material, cemented into place with a refractory cement of the same composition. Lining must be carefully maintained to ensure the production of high quality melts. Any slag or dross left from a previous use of the furnace can ruin the quality of a melt. If the furnace is in constant use, you will have to patch the area around the furnace door daily, and make up the spout. The port sleeves of the electrodes should also be patched daily with the proper type of cement, and then reamed to ensure a tight electrode fit. After perhaps 20 or 30 heats, you will have to reline entirely.

The inner lining of an electric furnace is superimposed upon a layer of insulating brick. Both the insulating and the refractory materials are provided in the form of specially designed shapes that fit into the furnace shell at particular locations. Before you begin to replace a lining, check the lining assembly plans in the manufacturer's technical manual.

The life of the new lining, as well as the quality of the metal produced, will depend largely upon the initial drying out of the lining replacement. The following steps should be carefully observed:

1. When the barrel has been relined, replace it on the rollers.
2. Fasten the automatic and manual electrode brackets.
3. Insert and clamp two carbon electrodes; they should be aligned so that they appear as one continuous unit.
4. Protect the electrodes with one ply of heavy wrapping paper, and then push the port sleeves into place, tamping them with cement. Check the electrode alignment again.
5. Remove the wrapping paper, and operate the electrodes manually over their full travel. No binding or sticking should occur.
6. Cut away the refractory door brick (so that air can get to the barrel during the melting cycle), and ram the space around the door, and the spout, with the refractory material used as lining.
7. Burn a charcoal fire in the barrel for at least 12 hours; then clean out most of the charcoal. (A wood fire may be used but it requires more attention.)
8. Insert the stationary carbon electrode so that it is about 1 1/2 inches past the center of the barrel; adjust the automatic electrode so that there is 1/2 inch between it and the stationary electrode.
9. Circulate the cooling water, as you would at any time before starting the furnace. This prevents damage to the electrode clamps, or other jacketed parts. Make sure that the temperature of the OUTLET water does not exceed 200°F.
10. Set the ROCKING CENTER on the index mark. (A discussion of the rocking mechanism is given in the following section, "Control Stations".)
11. Rotate the CONSTANT ROCKING PERIOD knob until the range pointer is in the OFF position; this indicates full normal rock.
12. Close the d-c electrode motor switch on the power panel.
13. Place the arc-circuit toggle switch in the ON position. Use the remote-control switch to throw the circuit breaker.
14. Push in the HAND button on the panel.
15. Advance the automatic electrode until it makes contact with the stationary electrode, and strikes the arc. Then rapidly withdraw the electrode until the kilowatt input meter on the panel shows the desired input rate; for drying out, this should be less than the rated input of the furnace.
16. Push the AUTOMATIC button on the panel, and make the necessary adjustments with the load-adjusting rheostat. On automatic control, the furnace unit tends to stabilize itself at the proper input.
17. Place the rocking motor contactor box switch in the ON position.
18. Place the AUTOMATIC ROCK switch in the ON position.

The drying-out period should be as long as possible. A practical rule is to apply heat intermittently as follows: 6 kilowatthours once each half-hour for 2 hours, then 9 kilowatthours once each half-hour for the next 2 hours. After that, additional heat should be applied continuously until the lining temperature reaches white heat (about 2700° F). Turn off the remote-control switch, the arc-circuit toggle switch, and the d-c electrode motor switch in this order (the reverse of steps 12 and 13), and allow the lining to cool to dull red before you remove the charging door. Loosen the electrode clamps, and run the automatic electrode back and forth in the port sleeve. This will remove foreign matter that might cause binding.

The furnace is now ready for operation, and the first heat should preferably be made the next day. Just before putting the furnace into operation, inspect for any lining cracks, and patch them with the same type of refractory that was used to cement the preformed shapes used in lining.

The ELECTRODE BRACKETS provide for holding one electrode in a fixed position during furnace operation, while continual adjustment is made on the other electrode. The electrode in the manual bracket should be adjusted only when the power to the furnace is cut off. Adjustments to the electrode in the automatic bracket are usually made by an electric motor. They can, however, be made manually—as in the case of the fixed electrode—by pulling out the balance handle on the automatic bracket. Once the arc has been struck and the furnace is operating, only the automatic adjustment should be used.

Electrodes are made with the ends bored and threaded, and it is therefore possible to join individual lengths by using a similarly threaded nipple. Use the electrode tongs in joining electrode sections.

In mounting the electrodes on the brackets, make certain that there is good contact between the clamps and the electrodes. If you are using joined sections, be careful not to have the joint area coincide with the clamp. The result of this is usually a broken nipple, or a reduction in the area of electrical contact. For every heat, the electrodes should be positioned so that there will be a space of about 1/2 inch between the approaching ends of the automatic and the stationary electrodes, and the stationary electrode should be about 1 1/2 inches past the center of the barrel. This precaution ensures that the arc will be fairly well centered during the melting process, and it also prevents damage to the end walls of the furnace lining.

CONTROL STATIONS

The three principal control stations for an indirect-arc furnace are: the power panel already referred to; the reactance control located on the transformer; and the rocking control mechanism, located on the right-hand upright of the furnace supporting structure. The power panel is the station from which you can control the current passing through the electrodes, and also control the electric motor that adjusts the movable electrode. The reactance control on the transformer stabilizes the arc. The rocking control assembly controls the rocking movements of the furnace. Successful furnace operation requires the coordinated adjustments of these various controls.

From the discussion of the furnace construction, you learned that power input to the furnace is controlled at the power panel. (See fig. 5-2.) This input, of course, determines the amount of heat developed in the furnace. By adjusting the rheostat knob on the ELECTRODE REGULATING AND POWER PANEL (the load-adjusting rheostat is on the left side of the panel, about halfway down), you can set the power for the desired value. This power, expressed in kilowatts, will be indicated on the kilowatt meter mounted in the upper right corner of the panel.

Just to the right of the load-adjusting rheostat, you will see a vertical row of pushbuttons. These control the motor that regulates the movements of the automatic electrode bracket. The rheostat knob is set for the predetermined current value, but one of the major factors in maintaining that current is a constant adjustment of the gap between the electrodes. As part of the electrode burns away, the gap widens, and the current value would change if the electrode motor did not automatically move the electrode to maintain the desired gap.

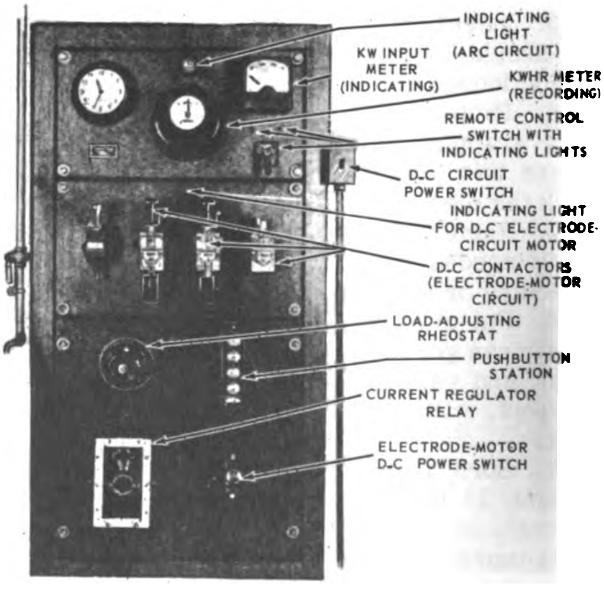

102.27X

Figure 5-2.—Power panel for rocking indirect-arc furnace.

A current regulator relay is mounted on the panel, just below the rheostat. This relay controls the direction of the electrode motor when this motor is operating automatically; it is actuated by current flowing from the transformer to the electrodes. When this current varies from the predetermined value, the relay regulator functions to change the operation of the electrode motor.

The Molder's responsibility, concerning the power panel, is to learn the functions of the various automatic devices and controls. Maintenance of these controls, including adjustment of faulty conditions, is the responsibility of an Electrician's Mate.

Variable reactance is provided in the furnace transformer primarily for the dual purpose of stabilizing the arc and limiting the current to a specified value. The REACTANCE CONTROL on the transformer is shown in figure 5-3. The handwheel secured to a shaft in the top cover can be turned to vary the reactance, which is the TOTAL resistance in the electrical circuit. Turning the handwheel in the clockwise direction increases reactance; turning it in the counterclockwise direction decreases reactance. Approximate reactance can be read from a scale on the front of the transformer.

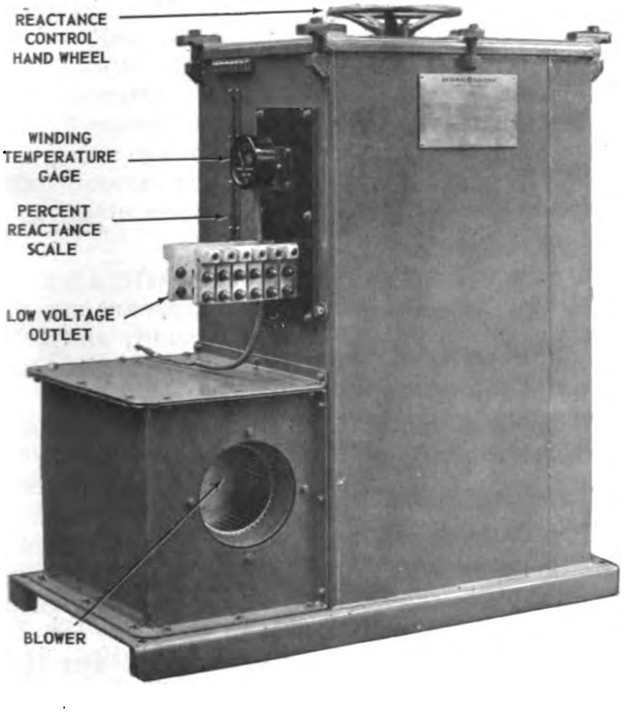

102.28X

Figure 5-3.—Transformer for rocking indirect-arc furnace.

The most effective results are obtained when the furnace is operated at approximately its rated power input with the reactance set at a minimum to produce a sharp clear arc and a suitable stability at the proper power input.

The exact reactor setting cannot be specified, because of variance in electrical circuits. Watch the arc during furnace operation. If it becomes smoky and sluggish, decrease the reactance. If it is unstable and wild, increase the reactance. Remember that the power factor decreases with an increase in reactance percentage, and additional reactance must be used when a furnace is operated at a low power input rate.

The VARIABLE ROCKING CONTROL mechanism provides all the devices (except that for energizing the circuit) for rocking the furnace, and for tilting the barrel when the melt is ready for pouring. The control mechanism is illustrated in figure 5-4. The power switch is usually located on a convenient bulkhead.

The procedure for putting the rocking mechanism into operation is as follows:

1. Energize the circuit by throwing the power switch, placing the emergency switch (in contactor box near power switch) in the ON position, and momentarily depressing the NO-VOLTAGE CONTROL pushbutton. This button is located on the rocking-control panel, but it is not visible in figure 5-4.
2. Rotate the furnace barrel so that the spout is in a suitable position, either pointing straight upward, or at about 45° forward of the vertical position.
3. Set the rocking center pointer on the index mark, so as to synchronize the furnace barrel with the angle of rock.
4. Depress the HAND button on the panel.
5. Set the range pointer and the selector on the settings that will give the greatest angle of rock and that will permit the furnace barrel to reach full normal rock as rapidly as is compatible with electrode safety.
6. Place the AUTOMATIC ROCK switch in the ON position.

The range pointer indicates the angle of rock, and the selector provides the means for changing the rate of the rocking angle. The No. 1 setting is the fastest; the No. 6 is the slowest. If a delay in automatic increase is desired, the constant rocking period knob should be set at the same time as the range pointer and selector.

Suppose you wish to provide for a 15-minute period of constant rocking at a 20° angle of rock

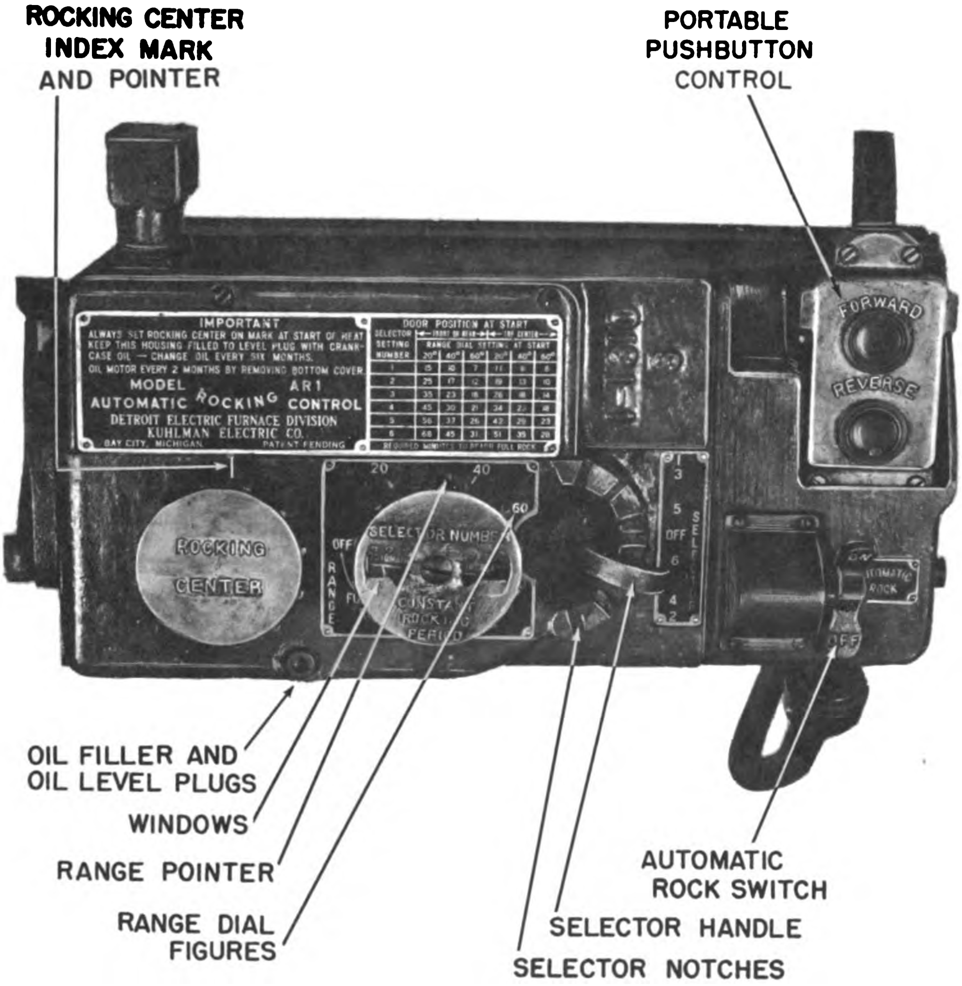

102.29X

Figure 5-4.—Variable-rocking control panel.

before automatic increase in rocking angle begins. Set your range pointer at 20, and with the constant rocking period knob held in, set the selector at the desired setting. Still holding the constant rocking period knob in, rotate it until the number 15 appears in the window under the setting number that you selected. Your furnace will now rock constantly at a 20° angle for 15 minutes; at the end of this period, the words "automatic increase" will appear in the window, and the rocking angle will increase progressively from 20° to the full normal rock selected.

The nameplate table on the rocking control mechanism shows the time required for the barrel to reach full normal rock from the various settings and charging positions. The times listed are an approximation of the time that will elapse between the appearance of "automatic increase" in the window, and full normal rocking; any delay time provided for is not included.

The advantage of the rocking feature of these furnaces is the fact that the charge is able to absorb a maximum amount of heat from the refractory lining. Therefore, the sooner the furnace reaches full normal rock, the more rapid will be the melting of the charge, and the lower will be the power consumption. As you gain experience, you will be able to judge the safest and most efficient setting for a charge. For the first heat, set the selector in the No. 6 notch, and set the constant rocking period knob at 20°. Delay increasing the angle of rock. Observe the heat, and the position of the charge in the barrel; as the heat progresses and the charge settles, increase the rock manually rather than automatically.

When you are dealing with molten metal, you must take every precaution to safeguard yourself and your fellow workers. Establishing the rocking angle calls for a thorough understanding of what is involved. Remember that when you set the range pointer, you establish a rocking arc having an equal number of degrees on each side of the starting position of the spout. Be sure to have your spout pointing straight up. If it must be at any angle forward of the vertical position, make sure that this angle is small enough to allow a margin for safety when the rocking mechanism is operating. Once the furnace is rocking, do not depress the knob, or you will establish a new center of rock.

Limit and overtravel switches provide safe limits within which the barrel may rock without spilling molten metal. The limit switch is the device by which the direction of the barrel is reversed, when the end of the rocking arc is reached. The overtravel switch operates if the limit switch fails, and terminates the rocking by deenergizing the circuit.

These two safety devices are mounted on the furnace base, and are automatically controlled by a cam attached to the ring track. They are not to be opened and closed by the furnace operator, while the furnace is in operation, but the operator should check them before putting the furnace into operation, to make sure that they are in proper adjustment. Before checking the overtravel switch, make sure that the automatic rock switch is in the OFF position.

OPERATION AND MAINTENANCE

Once you have learned how to adjust the various controls on the lower panel, the transformer, and the furnace rocking mechanism, you will find it a fairly simple matter to control the other factors that enter into successful operation of an electric furnace. These additional factors are preheating and charging the furnace, and proper maintenance of the furnace lining.

PREHEATING a cold furnace requires about 80 kilowatthours for an LFC furnace, and about 115 kilowatthours for an LFY furnace. The lining should preferably be preheated to the tapping temperature of the alloy to be melted; in any event, it should be brought to a bright red or a yellowish heat. If the furnace is already warm, less power input will be required. It is best never to charge a cold furnace; this will not only lengthen the melting time, but will also produce an inferior melt.

CHARGING the furnace should be done with the furnace door in the top center position, or within 45° of top center. This will be the position in which you will want the spout when you establish the rocking arc. The electrodes should be withdrawn until their tips are flush with the inner wall of the furnace, to prevent their being damaged during charging.

Mixing of the metal is an important feature of the rocking furnace. The first pieces to be charged will be the so-called foundry returns—that is, the gates and risers from previously made castings. If borings are used, they should be added at this point. They will filter down through the foundry returns, and give a more compact charge. Ingots are added last of all. The heaviest pieces are always charged to the rear of the barrel. Most of the completed charge should lie to the rear of the barrel, so that electrode safety will be ensured even with a large angle of rock. Charging must be done as rapidly as possible, to prevent any excessive loss of heat from the lining, and the rated capacity of the furnace must not be exceeded.

After charging, you should center the carbon electrodes. If you follow the directions already given, in the section on the electrode brackets, you will ensure that even with the electrode burn-off during the melting cycle, the arc will always be located near the furnace center.

If an electrode breaks during the melting cycle, you will have to shut the furnace down, and insert a new electrode. If you are using an electrode made up of joined sections, watch as the joint approaches the arcing end, and break it off. If it is allowed to slip off and fall into the hearth of the furnace, it will cause carbon pickup by the molten metal.

Observe the charge periodically during the melting cycle, to make sure that it is melting satisfactorily. Initially, a molten pool of metal should collect under the arc. As the angle of rock increases, this pool will wash over the rest of the charge, and speed up the melting process. When the charge is completely molten, a close check should be kept on the temperature; either an immersion or an optical pyrometer is used, depending upon the metal being melted. Any slag or dross that may have formed will make accurate temperature determination difficult.

Tapping should not be delayed once the proper temperature has been reached. Just before tapping, reduce the power input to the furnace, but have it sufficient to maintain temperature during the tapping period. Place the automatic rock switch in the OFF position, and use the portable pushbutton controls to tilt the furnace through the pouring stage. A dried, preheated ladle must be used for tapping the molten metal.

LINING MAINTENANCE, which is essential for the production of a high quality melt, is also affected by slag or dross. If they are allowed to accumulate in a lining, a choked arc will result. All slag and dross must be removed; no patching should be done over a slag area.

Securing the furnace is done after the molten metal has been completely drained off. Remove the charging door, and roll the furnace shell completely over (using pushbutton control), until the charging door opening is directly underneath. Rock the shell back and forth to drain out slag and dross; if necessary, apply the arc for a few minutes. Then return the barrel to its original charging position. Remove any slag from the spout, and repair by hot patching if necessary.

After this, you should run the electrodes in and out, to remove metallic particles and to check for binding. Then blow out and clean the port sleeves, and the furnace is ready for the next heat.

To prevent the furnace shell from leaving the base of the furnace structure in a heavy sea or when subjected to nearby severe explosive forces, the shell may be locked in position as described in the following steps.

1. Place the Automatic Rock ON and OFF Switch in the OFF position and momentarily push the No-Voltage Protection Switch Button.
2. Hold down the Forward Portable Pushbutton and rotate the shell forward until the two rear shell hooks engage the drive shaft.
3. Slide the two locking pins, located at the front of the furnace base, into the shell eye plates.

With the shell in the locked position, the charging door is down in the drainage position, the safety overtravel switch is held open, and the automatic rocking controls are inoperative. Should the portable pushbuttons be accidentally pressed when the shell is LOCKED, no harm will result.

MELTING PRACTICES

Knowledge of the proper melting practice to employ for the various metals with which the ML3 and ML2 must work will be easier to gain if melting records have been kept in the foundry. The experience of others can often be useful as a guide or a shortcut in mastering the details of your job. For this reason, records of casting operations that produced unsatisfactory results can also prove helpful, in that they point up the errors that must be avoided.

If records are available, look up the type of alloy in which you are specifically interested, and check for information on the following points: the size of the heat, whether it was charged at one time or in parts, when alloy additions were made, meltdown time, and holding time. If an electric furnace was used, check the power input used during the various periods of the melting cycle.

A few general rules for melting down copper-base alloys and gray cast iron—the metals that you will probably work with—will provide you with a background into which you can fit the additional information that you will get from higher-rated men and from foundry shop records.

In melting COPPER-BASE ALLOYS, remember that the rule is to use foundry returns first in charging the furnace, and to preheat the ingot material before you add it to the charge. A slightly oxidizing atmosphere is required, and this calls for a very careful control of the arc, since poor arc characteristics will cause a highly reducing atmosphere.

Tin-bronze melts should be brought to a temperature about 25° F to 50° F above the pouring temperature. Before the molten metal is removed from the furnace it must be thoroughly skimmed; if it is transferred to a ladle, it must be skimmed a second time. Aboard ship, heats are usually made with ingot metal that has the required composition. If virgin metal is used, however, a piece of zinc, held in a pair of refractory tongs, is plunged deep into the molten mass after it has been transferred to the ladle. There should be 4 ounces of zinc for each 100 pounds of melt. The tongs must be thoroughly dry, not only to avoid introducing moisture into the melt, but also to prevent splashing of the hot metal.

After the melt has been allowed to stand for about 3 minutes, it is ready to be deoxidized. This is done by plunging phosphor-copper into the melt, observing the same precautions as with the zinc. The amount of phosphor-copper should be in the proportion of from 2 to 3 ounces to each 100 pounds of melt. At this point, the melt is ready for the mold.

To melt yellow brasses and manganese bronzes, you will have to bring them to a temperature of 1800° F to 2000° F, and allow to flare for a few minutes, so that the escaping zinc vapor will flush the melt. Overheating, however, will not only cause excessive zinc loss, but can be a real hazard to the foundry personnel because of escaping zinc fumes. A flaring period of from 3 to 5 minutes is usually sufficient. Zinc loss over such a period is limited to about 1 percent.

The melt is then skimmed, and if poured into a ladle, skimmed a second time. At this point, enough zinc is added to replace the amount lost in the flaring period. The melt* is then cooled to the required temperature, and poured into the mold.

Aluminum is customarily melted only in an oil-fired or an induction furnace. The operation of the induction furnace and the process of melting aluminum in an oil-fired furnace is described later in this chapter. ALUMINUM BRONZES and SILICON BRONZES, however, are frequently melted in an indirect-arc furnace—but the process calls for a very careful control of furnace atmosphere because aluminum and silicon oxidize very easily. With excess air, there is bound to be dross formation and high oxidation losses.

The molten metal must be raised to a temperature of 50° F to 100° F above the pouring temperature. After the melt has been skimmed, zinc can be added to it, as necessary. The melt is then allowed to cool to pouring temperature.

For melting CAST IRON, the use of an electric furnace is standard practice in shipboard foundries. An electric furnace is much better adapted to withstanding the high temperatures necessary for melting cast iron than is the oil-fired furnace.

Charging of the electric furnace is done in the same sequence as described in the foregoing section, "Operation and Maintenance." The foundry returns are placed in the barrel first, and then the heavy pieces are charged. If cast iron or steel borings are used, they are put in next. Then additions of nickel, chromium, molybdenum, and vanadium are made. If these finer alloys are placed too close to the top of the charge, there will be some loss due to blowing out of the arc; therefore, pig iron and steel scrap are added last.

About 3 to 5 minutes before tapping, ferromanganese and then ferrosilicon are added through the spout, and the bath is superheated so as to bring about a good separation of the slag from the metal. The superheat temperature should be from 2700° F to 2800° F. At 2800° F, a bubbling action can be observed.

Kilowatthour input provides a good basis for estimating temperature. A rough determination of temperature can be made by holding a soft-iron rod in the molten metal for 15 or 20 seconds. If the tip of the rod sparkles, the temperature is about 2700° F; if the tip melts while it is being held in the molten mass, the temperature is 2800° F or higher, and the iron is ready for tapping. The rod should be about 1/2 inch in diameter, and should be bent so that it will not strike against the electrodes.

The metal can be cooled to pouring temperature in the furnace, or it can be tapped into a ladle and then cooled. Once the tapping temperature is reached, there should be no delay in pouring. A few minutes delay will probably work no harm, since the temperature will remain fairly static for a very brief period after the arc is cut off. If the delay is more than a few minutes, you should maintain the required temperature by operating the furnace intermittently at reduced power input but at full rock.

Before the molten iron is tapped, it is customary to pour a chill test specimen. When this specimen is cooled and fractured, the experienced Molder can determine from its appearance whether the heat has the desired characteristics. Necessary adjustments can be made by adding graphitizing elements (graphite, ferrosilicon, ferronickel) to the bath or to the ladle. However, if the heat is not to be poured directly from the furnace, or if the entire heat is not tapped into one ladle, the addition of the graphitizing elements is not a simple matter. Unless the weight of the metal tapped can be determined, the proportion in which these elements are added may cause nonuniformity of the metal composition.

BABBITT is another metal composition with which the ML3 and ML2 will work. Babbitt, or any other tin-base antifriction metal, can be melted in a cast steel or cast iron pot, with the necessary heat being supplied by a gas torch. It is very doubtful that you will use an electric furnace for melting babbitt.

ROCKING ELECTRIC-RESISTOR FURNACE

The construction of the electric resistor furnace is essentially the same as that of the indirect-arc furnace, but it differs in operating characteristics. In the indirect-arc furnace, heat is produced by an electric arc between electrodes; in the resistor type furnace, the resistance of the electrodes to the current passing through them causes the electrodes to become heated to a temperature sufficient to melt the charge. In operation, the electric resistor furnace does not have a cracking sound as the indirect-arc furnace does; it is quiet and produces no distinctive arc. In both types of electric furnaces, the heat is radiated to the furnace lining, which in turn reflects it to the metal charge.

CONSTRUCTION

The electrodes and electrical system have been modified to use resistor heating elements. The furnace uses two pairs of 1 3/4-inch—diameter resistors, which meet in the center of the furnace. They are seated and locked by spring tension from the electrode brackets. The use of male and female electrode sections permits easier withdrawal of the electrode for charging or replacement. The resistors thread into a 4-inch-diameter terminal and form a reduced section, which in operation forms two continuous graphite bars through the melting chamber. The tension from the electrode brackets must be strong enough to hold the resistors in position, and to maintain good electrical contact to prevent arcing.

The current for the resistor furnaces on repair ships is supplied by a 440/36-volt, 150-kilovolt-ampere, 3-phase to 2-phase, Scott-connected transformer. The input voltage is varied from 440 to 184 volts in 11 steps by means of solenoid-operated switches, resulting in a variable secondary voltage from 36 volts to 10 volts at the furnace terminals. Numerals on a disk visible through a circular window in the transformer housing indicate the nominal circuit voltage for each position. Pushbuttons on the control panel permit raising and lowering of the voltage and current on each phase so that the power input can be controlled at almost any level. During melting, the power input to the furnace is generally held between 125 and 150 kilowatts.

The ELECTRODE BRACKETS are somewhat different in design from those on the indirect-arc furnace, because of the difference in heating elements, and the necessity for a greater number of water-circulating lines. Electrode ports in the furnace sidewalls, as well as the electrode brackets, must be water cooled. Figure 5-5 illustrates the more complicated arrangement necessary for the electrodes of the resistor furnace.

The step-by-step procedure for installing the carbon electrodes is as follows:

1. Thread a FEMALE resistor into each of two resistor terminals.
2. Withdraw the electrode clamps of the left electrode bracket as far as possible. Open the clamps and place a terminal in each clamp so that the outer edge of the terminal is flush with the outer edge of the electrode clamp, allowing the female resistor and the inner end of the terminal to protrude through the furnace electrode port.
3. Close the electrode bracket and tighten the wing nut, thus securing the terminal in the electrode clamp. DO NOT USE A WRENCH TO TIGHTEN THE WING NUT.
4. Feed the electrode clamps on the left bracket IN until the carriage strikes the stops.
5. Thread a MALE resistor into each of two resistor terminals. (On the opposite side from the female resistors.)
6. Withdraw the electrode clamps on the right-hand bracket about one-fourth of the way back from the carriage stop, and open the clamps. Install each male resistor and resistor terminal by sliding it through the furnace electrode port until it makes contact with the female resistor secured in the opposite bracket.
7. Without disturbing the carbon resistors, adjust the carriage of the right-hand bracket so that the outer edge of the clamps is flush with the outer ends of the resistors. Then tighten the electrode-clamp wing nuts.
8. Turn the feed handle on the right-hand electrode bracket to the right. This procedure moves the electrode bracket in, compresses the springs in each electrode-bracket carriage, and thus provides positive contact under pressure at the resistor elements' conical joint. About 1 1/2 full turns of the handle will provide the necessary pressure. Once the electrodes are properly mounted and run to the center of the furnace, no additional manipulation or control is necessary.

CONTROL STATIONS

CONTROL STATIONS for the resistor type furnace are the control and meter panel, and the furnace rocking mechanism; in addition, manual

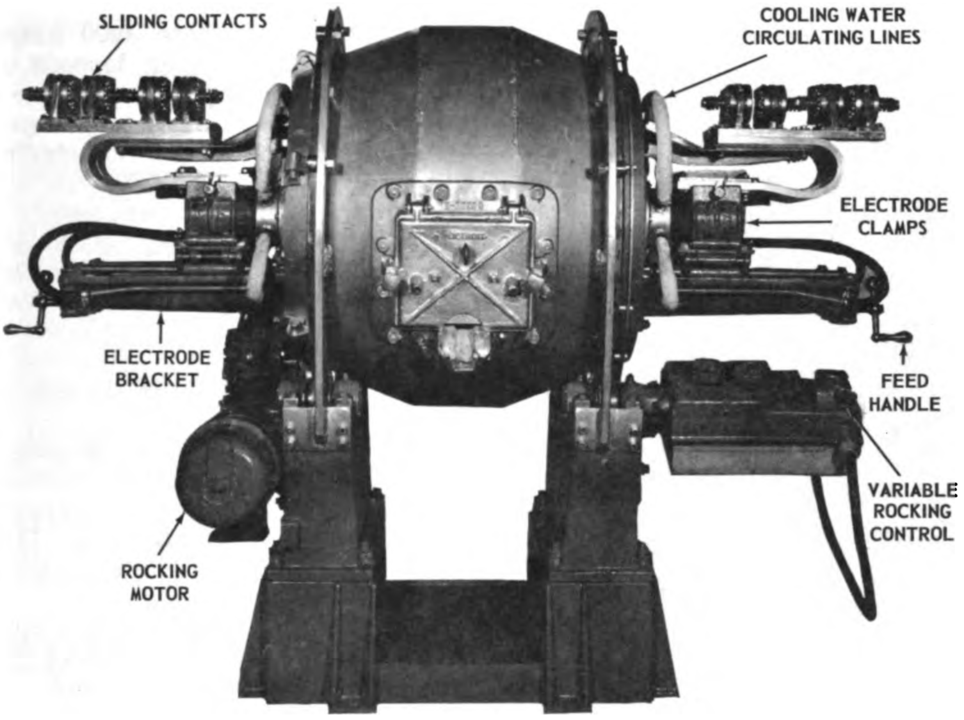

102.30X

Figure 5-5.—Rocking electric-resistor furnace.

adjustments in current value passing to the heating elements may be made at the furnace transformer. The rocking mechanism operates in the same way as that on the indirect-arc type of furnace, and therefore requires no additional discussion here. However, the furnace transformer controls, and the indicating devices on the control and meter panel, require some explanation.

Since you must understand the manual adjustments of current input values before you can understand remote-control adjustments, let us start with the furnace transformer (see fig. 5-6). On the housing you will see two circular windows, and beneath them two shafts by which the numbers appearing in the windows may be changed.

These numbers represent positions on a tap-changer drum switch, and provide for a range in voltage, from 15 to 33 volts, across the resistor terminal of the heating element. To adjust for the desired voltage, turn the shaft with the handwheel, until the appropriate number becomes visible in the window. One shaft is provided for each of the resistors in the furnace. Turning the shaft changes the position of the drum switch; the switch position determines the tap outlet used, and thus controls the power input. Voltage can be changed whether the transformer is under load or not.

After manual operation of the tap changer, the handwheel should be removed from the shaft and placed on the bracket provided for it. The position of each drum switch may also be adjusted by remote-control switches located on the furnace control and meter panel. (See fig. 5-7.)

You must make yourself thoroughly familiar with the purpose of the devices on the control and meter panel, but remember that your responsibility is to understand them as indicating devices. Any necessary maintenance to keep them in proper operating condition is to be done by an Electrician's Mate.

Notice first the remote-control tap-changer switches. These switches energize solenoid circuits—that is, when the control switch is placed in the closed position, the circuit is energized and in turn magnetizes the solenoid coil. By turning the appropriate circuit switch, you magnetize the solenoid, and it then raises (or lowers) the voltage by one step. These switches are momentary contact switches, and

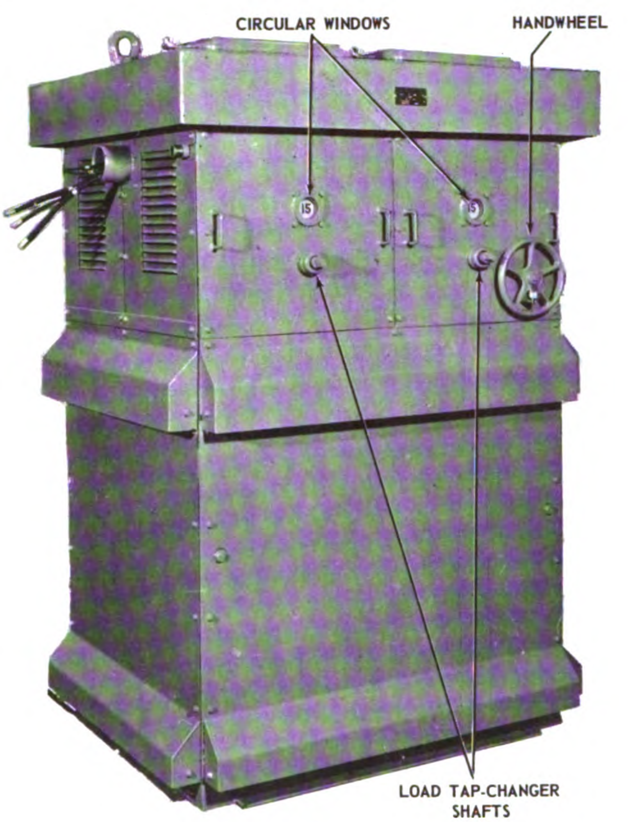

102.31X

Figure 5-6.—Transformer for rocking electric-resistor furnace.

the circuit is energized only while the switches are held in the closed position. Operate them with a positive, delayed movement. If you release them too quickly, the drum switch may not have moved completely into its new position, and the resulting arcing across the contactor may burn out the contactor elements.

You must also learn how to read the meters on this panel, in order to have accurate information on the value of the current that is passing to the furnace heater elements.

Two indicating kilowatt meters, one for each resistor circuit, measure, at any instant, the value of the power in kilowatts. It is preferable, though not essential, that both meters indicate the same amount of input. Specific input will depend upon the purpose for which the furnace is being operated; that is, whether furnace lining is being dried out, whether a charge is being melted, or whether the molten metal is being held at tapping temperature.

There are two indicating ammeters, one for each resistor circuit. These ammeters are calibrated from 0 to 4000 amperes, and the position of the pointer depends upon the drum switch setting and the resistance of the heating element. Do not use an amperage over 3800; in normal operations, the ammeter reading should be between 3000 and 3500.

An integrating hour meter, with its dial calibrated from 0 to 300, shows total power input, in kilowatthours, through both resistors. The indicating hand must be reset to zero for each operating cycle.

OPERATION AND MAINTENANCE

In the operation of the electric resistor furnace, the same attention must be paid to lining maintenance and to proper charging as in the indirect-arc furnace. Also the cooling water must be circulating in the lines about the electrode brackets.

The sequence for putting a cold furnace into operation, to dry out a lining, to preheat, or to melt a charge, is as follows:

1. Adjust the resistors and terminals in the electrode clamps.
2. Turn on the cooling water circulation.
3. Set each tap changer on the transformer housing so that the number 15 is visible in both windows.
4. Close the solenoid circuit-breaker switches.
5. Close the primary power switch.

The procedure that should follow after step 5, will vary somewhat according to the purpose for which you are using the furnace. In any heating operation, this next step must be one of increasing the power input to the furnace heater elements.

PREHEATING a furnace usually requires a power input of from 60 to 80 kilowatts. It must be continued until the lining is at the tapping temperature of the metal that is to be melted. If the furnace is being heated to dry out the lining, an input of 50 to 60 kilowatts is sufficient; some foundrymen recommend air-drying a new lining for about 8 hours BEFORE preheating. Power increase should be at a slow rate, over a 6-hour period. For other types of furnace operation, it is usually possible to increase voltage a few minutes after the furnace has been lighted off.

The method of CHARGING the furnace depends upon the type of material that makes up the charge, and upon the total weight. For the

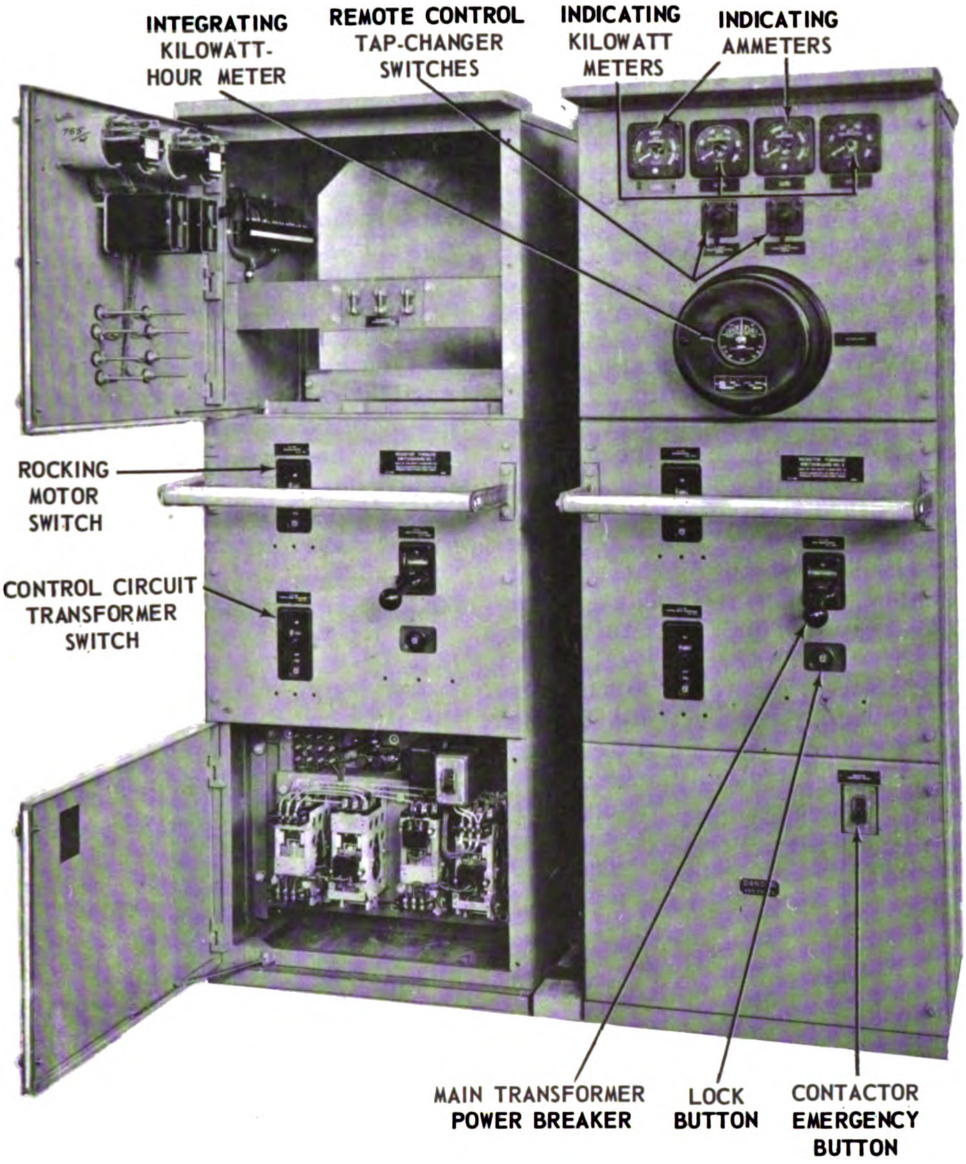

102.32X

Figure 5-7.—Control and power panel for rocking electric-resistor furnace.

most part, the instructions for charging an indirect-arc furnace apply also to the resistor type of furnace. Be sure to withdraw the heater elements until they are flush with the end-wall lining of the furnace, to avoid the possibility of damaging the electrodes. When the charge has been placed, advance the electrodes (first on the left side, then on the right) until the clamps hit the limiting stops. When the two resistors are in contact, use the feed handle to adjust pressure. The furnace is now ready for the melting phase. The adjustment of the rocking mechanism, as mentioned before, is the same on both types of electric furnace.

MELTING PRACTICES

The melting practices for brass, bronze, and cast iron are the same for the resistor type furnace as for the indirect-arc type. Aluminum is not customarily melted in either of these types of furnace.

Where there is a preference for one type of electric furnace rather than another, the Navy Molder will probably not be able to make a choice. Aboard any specific repair ship, only one type of electric furnace—either indirect arc or resistor—will be available.

HIGH-FREQUENCY INDUCTION FURNACE

A third type of electric furnace utilized in Navy foundries is the coreless, high-frequency induction furnace. This furnace, like the rocking indirect-arc furnace, and the electric resistor furnace discussed in preceding sections of this chapter, is suitable for the production of all types of metals and alloys.

You should recall that both the indirect-arc furnace and the electric resistor furnace have transformers incorporated in their electrical systems. Transformers also form an essential part of the high-frequency induction furnace's electrical system. The furnace has a boxlike shell lined with refractory material in which is embedded a helical copper-tube coil—through which a high-frequency electrical current passes. The charge of metal is placed in the cavity or crucible of the shell. Electromagnetic induction causes a current to flow through the charge, thus avoiding the use of arcs and electrodes.

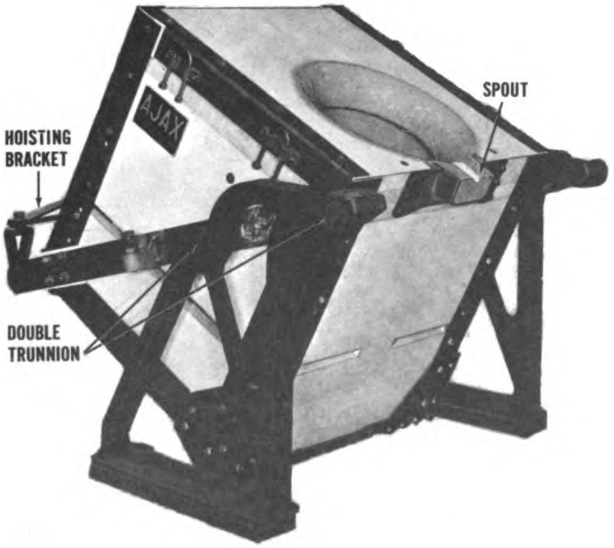

102.33X
Figure 5-8.—Tilting high-frequency induction furnace.

CONSTRUCTION

There are two basic types of coreless, high-frequency induction furnaces; the tilting type (see fig. 5-8) and the lift-coil (see fig. 5-9) furnace. Both are basically the same, except that the lift-coil furnace is limited to small sizes while the tilting type may have a capacity as great as 2 1/2 tons.

The tilting type induction furnace as shown in figure 5-8 consists of a single boxlike structure; it has a capacity of 650 pounds. Usually shore-based repair facilities or newly constructed tenders or repair ships will have a battery of three furnaces—two 650-pound tilting furnaces and one lift-coil furnace. Smaller installations, however, may have only the lift-coil furnace. All induction furnaces in a battery may be controlled from the same control panel.

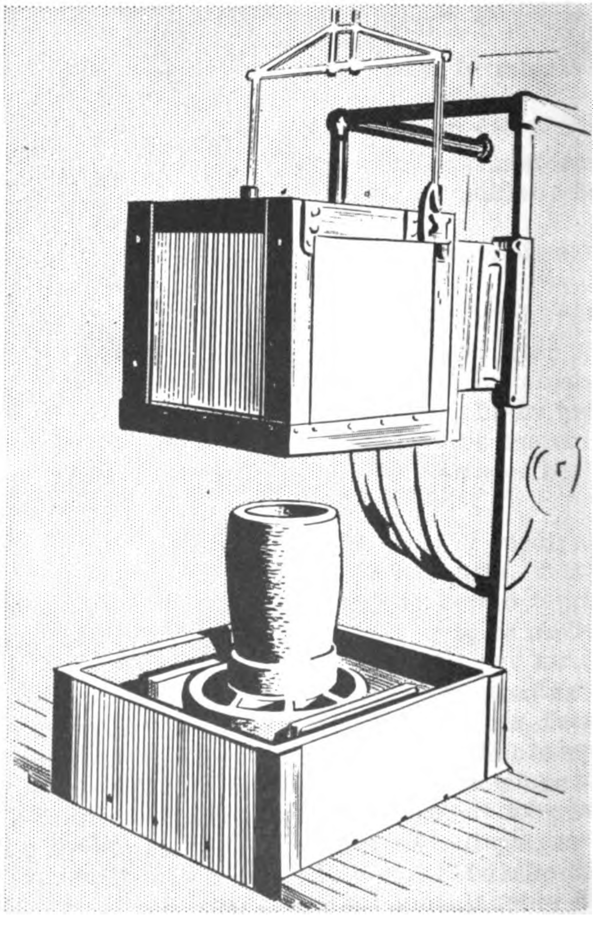

102.34
Figure 5-9.—Lift-coil high-frequency induction furnace.

To tilt the tilting type induction furnace, the hook of a power hoist is attached to a bracket on the lower rear of the furnace. As the furnace is elevated, the spout of the furnace is brought to the pouring position by the rotating of the box-like shell through the double trunnion arrangement located on each side of the furnace shell.

The lift-coil induction furnace, as shown in figure 5-9, consists of two sections—the base and the removable coil structure. The charge (metal) in the lift-coil induction furnace is melted in a crucible which also serves as a pouring ladle. The coil structure on the lift-coil furnace may be raised or lowered with a power hoist or chain falls. Except for the differences to be noted in comparing figures 5-8 and 5-9, all induction furnaces are alike; that is, the motor generators, the capacitors, and the control instruments are the same.

The essential parts of an induction furnace are shown in figure 5-10 and are described in the following paragraphs.

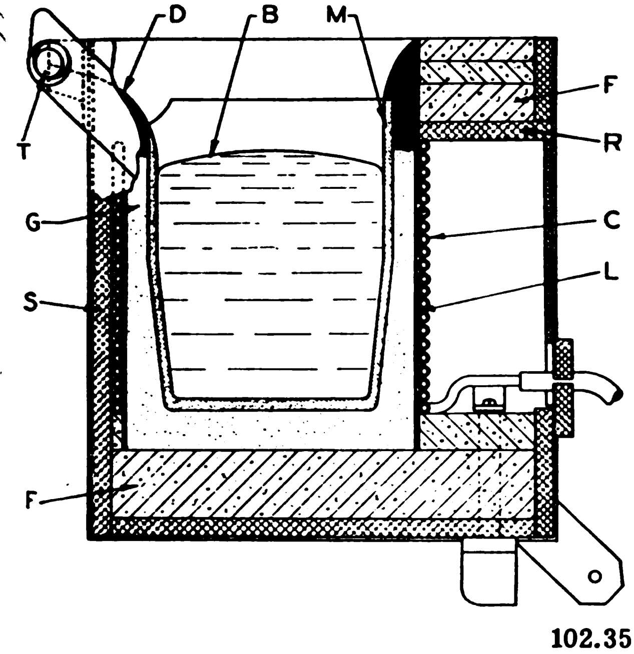

102.35

Figure 5-10.—Cross sectional view of a high-frequency induction furnace (tilting type).

The outer shell (S) is made of asbestos lumber (transite) and carries the trunnions (T) on which the furnace pivots during tapping and pouring. The shell is lined with refractory material in which is embedded a coil (C) that consists of a helix of water-cooled copper tubing insulated with a layer of refractory material (L) which forms a protective covering around the coil. This layer of refractory material is continued above and below the helical copper coil until it rests against the asbestos support (R), the firebrick top (F), and the firebrick base (F). The refractory lining around the coil and across the firebrick bottom of the furnace provides a cavity into which the refractory lining of the induction furnace is built. This refractory lining may take the form of a thin-wall crucible or supporting shell (M) packed into the cavity with a granular refractory (G), or it may be in the form of a sintered lining, which holds the charge of metal (B) and is molded at the top front edge of the outer furnace shell to form the pouring spout (D). When the furnace is in use, the inner refractory material of the wall and across the base becomes sintered (glazed) to a depth of 3/8 inch or more. The outer portion of the refractory material remains in granular form and serves as a support for the inner lining. In addition to supporting the inner lining, the granular refractory material serves as thermal insulation and as a barrier against the leakage of molten metal in case of a crack in the inner sintered lining.

When a 960-cycle high-frequency current is applied to the terminals of the coils, all space inside the coil is subjected to a rapidly alternating electromagnetic field. (Ordinary shipboard lighting and power circuits are only 60-cycle alternating current.) While the high-frequency furnace is operating, any electrical conductor inside the coil (furnace cavity) has current induced in it. The resistance of the metal charge (or any other electrical conducting material) to the flow of the induced current generates heat. This heat causes rapid melting of the charge up to and beyond the melting point required for pouring of the molten metal.

Alternating current has a tendency to hug the surface of the material through which it passes. Further, the higher the frequency of the alternating current, the more it hugs the surface of the conductor. Since high-frequency alternating current is on or near the surface of the conductor, resistance and heat are also concentrated in that area, resulting in rapid surface melting which in turn contributes to the overall rapidity of metal breakdown or melting. The heat is developed in the outer surface of the charge and is rapidly carried to the center of the charge by conduction. Heat by induction is very rapid through solid metal. After the charge starts to melt and a pool of molten metal is formed in the bottom of the furnace, a stirring motion occurs. This stirring motion (convection) not only carries heat to the center of the charge, but accelerates melting by washing molten metal against those portions of the charge that are still solid. In addition to accelerating the melting of the charge, the stirring motion also mixes the charge thoroughly, thus assuring a uniform melt. The electromagnetic forces set up by induced secondary current cause flow lines in the stirring motion which circulates the molten metal as shown in figure 5-11. The flow lines, as indicated by the arrows, show that there are no dead spots and that every part of the molten bath is stirred. The stirring motion thoroughly mixes the melt and thus contributes to the production of a uniform casting alloy. The molten bath of metal may be stirred more vigorously by increasing the power input to the furnace on the same principle as increasing heat will boil water faster.

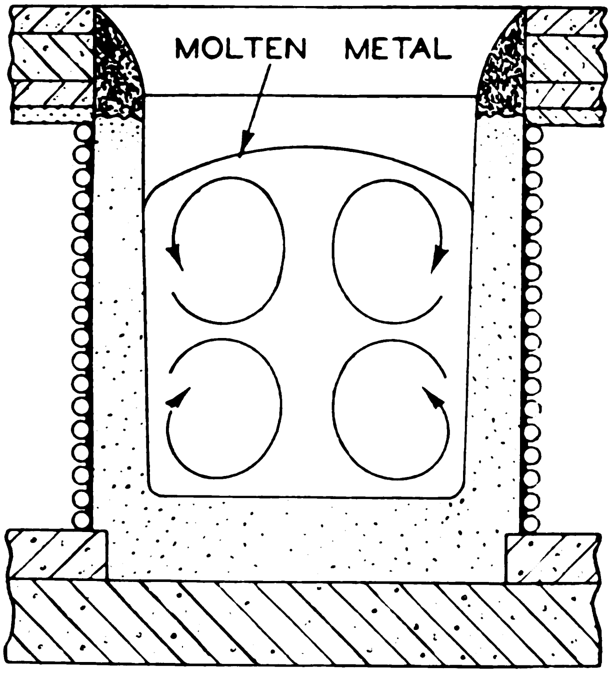

102.36

Figure 5-11.—Flow lines in the stirring motion during melting.

CONTROL STATIONS

An induction furnace installation consists of four major subunits: generators, capacitors, control instruments, and the furnace itself. These four units are interconnected with electrical circuits and a water-cooling system.

First of all, to operate the furnace there must be a source of power. This is usually a diesel-driven generator set capable of producing 175-kilowatt high-frequency current. The generator's field is excited by a 1.5-kilowatt direct-current exciter. A starting motor is necessary to activate this unit. The next subunit is the capacitors; there are 16 of these. All of these capacitors (or condensers) are operated directly from the control panel. A capacitor is a device for holding or storing a charge of electricity. In the high-frequency induction furnace installation, capacitors are used to balance the inductance of the furnace proper. By depressing pushbottons on the control panel, the capacitors may be cut in or out of the circuit as necessary to maintain the proper power factor. The capacitor pushbuttons are used when the power-factor meter on the control panel indicates an excessive "lag" or "lead" in power.

The location of the interlock box containing the capacitor control pushbottons and other furnace control devices is shown in figure 5-12. Although the power panel illustrated in figure 5-12 is not the only control panel for the induction furnace, it is the most important from the standpoint of furnace operation. Two other control stations are provided for starting the generators and switching the furnace controls from one furnace to another, when the foundry installation has two or more induction furnaces. Another station controls the pressure pump and a manifold for circulating cooling water through the furnace. All controls other than those shown in figure 5-12 are located in the cubicle (room) containing the generators and capacitors.

OPERATION

The individual pieces of material making up the charge should weigh between 1/4 pound to 2 pounds. The pieces should be so placed in the furnace that the charge is fairly compact. After charging, the operator is ready to "light off" the furnace by applying power. But first, he ensures that cooling water is circulating through the coil.

Assuming that the generator and exciter are operating, and that the appropriate throwover

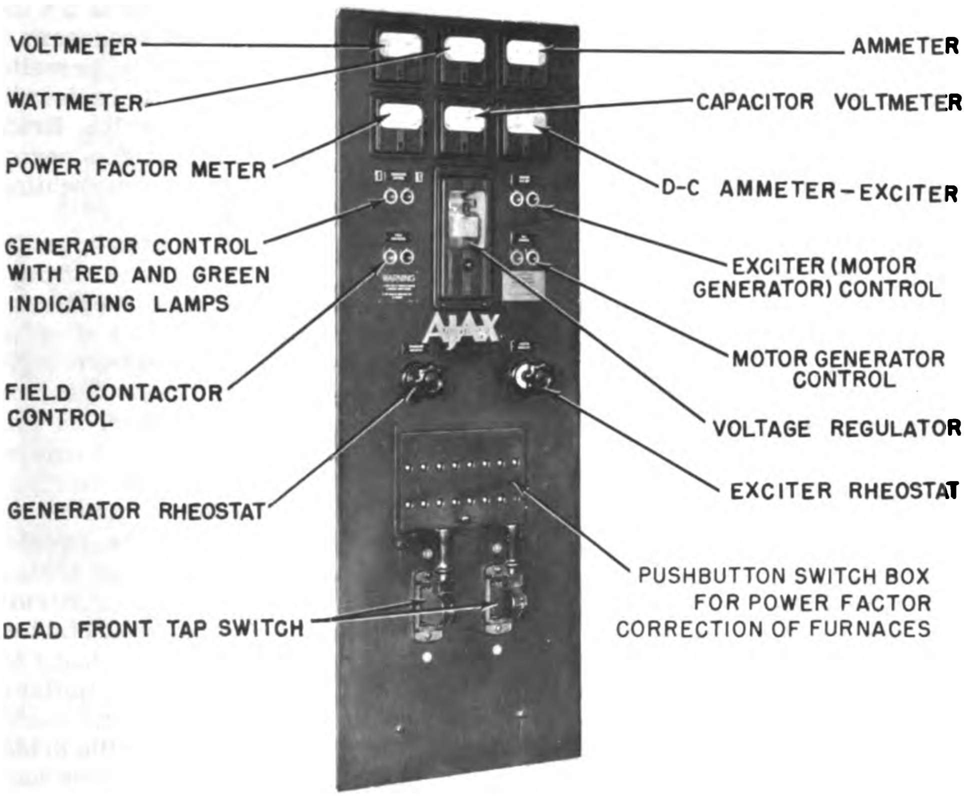

102.37X

Figure 5-12.—High-frequency induction furnace control panel.

witches have been positioned for the furnace elected for the heat, the procedure for oper-ting the furnace is as follows:

1. Energize the control and condenser apacitor) contactor circuits. The pushbuttons r this operation are located next to the oltage regulator.

2. Set the tap switches to positions 1 and 4. hese switches have the same function as the rum switch tap-changers discussed under re-istor furnaces.

3. Turn the voltage regulator rheostat cated on the face of the voltage regulator ounterclockwise as far as it will go.

4. Turn the excitor and the generator rheo-tats to their extreme clockwise direction.

5. Close the generator line contactor and e field contactor by pressing the appropriate ushbuttons on the control panels. The procedure iven energizes the furnace, but the power is at very low value.

6. Slowly turn the exciter and generator heostats in a counterclockwise direction until 00 volts is indicated by the voltmeter.

Voltage may now be slowly raised by turning the voltage regulator rheostat in a clockwise direction. While increasing voltage, closely observe the power-factor meter—its range is 50 percent LAG—100 percent—50 percent LEAD. If this meter indicates more than 90 percent lead, several capacitors should be removed from the circuit by raising the interlock-box cover and depressing a sufficient number of BLACK buttons to bring the power-factor reading between 90 percent lead and 98 percent lag. On the other hand, if the power factor is more than 98 percent lag, push one or more WHITE buttons to make the necessary power-factor correction. (Before making any capacitor or tap change, always zero the voltage rheostat.)

The temperature needed to melt down a given "heat" determines the amount of power input required. And, the amount of power required determines the position in which the tap switches are to be placed. For a low melting point material like aluminum, sufficient power is obtainable with the tap switches in positions 1 and 4.

To obtain higher temperatures, more power must be applied.

Further power increases are made by changing the relative position of the tap switches. There are four combinations of tap-switch positions, each of which governs a range of power increase: taps in positions 1 and 4, lowest power; positions 2 and 4, next to lowest power; positions 1 and 3, next to highest power; positions 2 and 3, highest power. In other words, through the manipulation of the voltage-regulator rheostat, and through changes in tap-switch positions, the power input to the furnace may be varied from a very low value to the full 175-kilowatt capacity of the high-frequency generator.

MELTING PRACTICES

In an induction furnace, as in other types of furnaces, lining installation and maintenance is most important. The lining installed in a 650-pound induction furnace depends on the metal or alloy that is to be melted. A clay-graphite crucible rammed in place with Norsand is used to melt nonferrous metals and alloys. Usually, a sintered lining is used to melt ferrous metals and alloys, but steel may be melted in a properly installed magnesia crucible.

Assuming that linings or crucibles are properly installed and that power is properly applied, the most important single factor in melting metals and alloys with the high-frequency induction furnace is the manner in which the furnace is charged. Scrap and alloys having a composition as close as possible to that desired in the finished casting are selected. Heavy pieces (ingots) are charged first, with scrap placed so that it can slide freely into the molten bath. The compactness of the charge has an influence on the speed of the melting. Consequently, large void spaces in the charge should be avoided. However, the charge should not be packed too tightly, or metal expansion due to heat prior to melting will crack the crucible or lining of the furnace.

In addition to checking the power-factor meter on the control panel and making corrections as necessary to maintain proper power factor, the furnace operator must watch the furnace charge during the melting period. When the charge begins to melt, the small scrap will slide to the bottom of the lining or crucible and into the molten bath. Convection currents produce a convex crown at the top of the molten bath which makes it difficult to keep a slag
blanket on the metal. This is not too importa
as a slag blanket is not necessary for satisfa
tory melting. Occasionally, unmelted metal h
a tendency to hang to the sidewalls or for
bridge between the sidewalls. Bridging is no
serious condition, but if it is permitted to c
tinue, lining damage and overheating of the me
or alloy will result.

Bridging can be avoided by proper placem
of the charge in the furnace. If bridging occu
reduce the power input to the furnace and reli
the bridged condition with a steel bar. Howev
when relieving the bridged condition, av
severe poking with the steel bar to prevent
furnace lining or crucible from being damag
Do not operate the high-frequency induct
furnace at full power input for more than 4
5 minutes if an unfreed bridged condition
ists; to do so will cause overheating of
molten metal bath under the bridge. Overhe
ing the molten metal has a harmful effect
metal composition because metal loss increas
(Metal losses for high-frequency induction f
naces are, on the average, similar to those ci
for rocking indirect-arc and rocking electr
resistor furnaces.) After the bridged condit
has been eliminated, full power may be resto
to the furnace.

When the metal reaches the desired pour
temperature, additional power is often appl
for a short period. This extra input of po
accelerates the stirring action of the mol
metal and thereby thoroughly mixes the h
As with all types of furnaces, everything m
be in readiness before the heat reaches
tapping temperature. All molds for the casti
to be poured from a particular heat should
ready for pouring before the furnace is start

OIL-FIRED FURNACES

Oil-fired equipment is usually furnished
ships that have limited facilities for generat
electric power. These furnace units are sat
factory for melting aluminum, brass, bron
and other alloys having low melting points. T
cannot satisfactorily produce the high tempe
tures required for melting cast iron and st

The two major types of oil-fired furnace
the stationary and the tilting types. The cruci
must be lifted into and out of a stationary (
furnace, but in a tilting furnace, a special
on the crucible makes pouring possible. Fig
5-13 illustrates the tilting-crucible type
furnace.

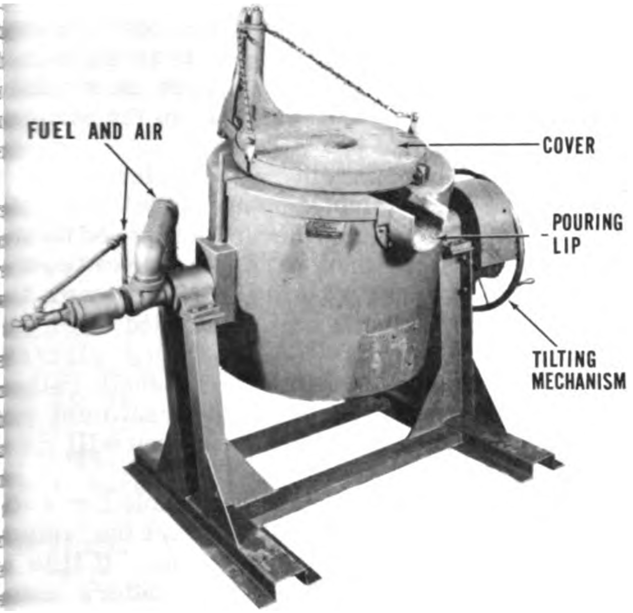

102.38X

Figure 5-13.—Oil-fired furnace (tilting type).

In both the stationary and the tilting-crucible furnace, the charge is melted in a separate pot that isolates it from the direct action of the flame. Figures 5-14 and 5-15 show cross-sectional views of the stationary (pit) furnace and the tilting type furnace.

CONSTRUCTION

The principal parts of the oil-fired furnace are the shell, the lining, a pedestal or base block, the crucible, and the combustion unit. The shell, or furnace barrel, is of steel; the refractory lining may be either of brick-like shapes fitted into the shell, or of heavy-duty refractory material rammed in as a single lining.

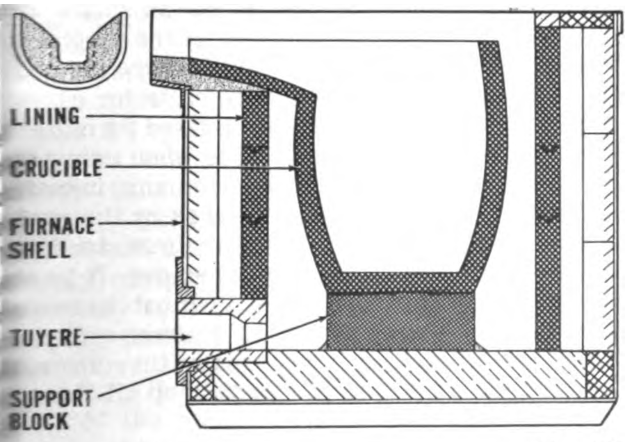

102.39X

Figure 5-14.—Cross-sectional view of a tilting type oil-fired furnace.

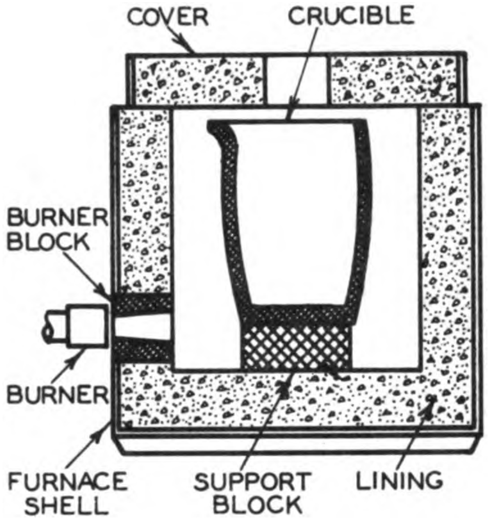

102.40

Figure 5-15.—Cross-sectional view of a stationary type oil-fired furnace.

Base blocks must be of the same or similar material as the crucible. The function of these blocks is to raise the crucible from the shell lining, and bring it into proper position with the burner. If the block is not sufficiently refractory, it may slump under the application of heat. Slumping could cause the crucible to crack, or to tilt and spill molten metal.

Crucibles are described in this text in chapter 4. Remember that when they are not in use, they should be stored in a warm, dry area. Never take them directly from storage and place them in a hot furnace; they must be dried out, at 300° F, for 8 hours before being put into use. This drying out should NOT be done in a gas or oil-fired core oven, for these fuels produce moisture as a byproduct of combustion.

The size of the crucible used should be that recommended by the manufacturer, rather than the one that seems to best accommodate the size of the charge. The manufacturer has taken into consideration the relative sizes of shell and crucible in calculating the volume of air available for combustion. It will be advisable to use the recommended size even though the charge is small, rather than to substitute a smaller crucible and thereby change the operating characteristics of the furnace.

The combustion unit is usually of the type that premixes the fuel oil and air, to ensure proper combustion. The burner should be located so that the centerline is level with the top of the base block and the bottom of the crucible. The fuel oil is supplied at a pressure of 20 to 30 psi; air is supplied from a blower, at a pressure of 1 psi, and is thoroughly mixed with the oil before it enters the furnace. If any additional air is allowed to enter around the burner nozzle, it can unbalance the premixing process and cause erratic operation of the furnace.

OPERATION AND MAINTENANCE

Lighting the furnace requires some skill. Hold the flame of a torch beneath the burner nozzle, at the burner port, and then just crack the air valve. Then crack the oil valve. The fuel-air mixture will ignite, and you can then adjust the burner control valves to get just the type of flame that you require.

The best atmosphere obtainable under ordinary conditions is one that is slightly oxidizing; and it is indicated by a slight green tinge on the outer edge of the flame. If you get a smoky yellow flame, the furnace atmosphere is a reducing one; that is, the volume of fuel entering the furnace is too great for the volume of air. Since even a slightly reducing atmosphere will cause gas absorption in brass, bronze, or aluminum, you will have to adjust the control valves. A neutral atmosphere, in which the air-fuel mixture is proportioned to give PERFECT combustion, is almost impossible to maintain. The slight excess of air in the oxidizing atmosphere is less harmful than the excess of fuel in the reducing atmosphere, although a highly oxidizing atmosphere will consume the graphite in the crucible.

It takes about 20 to 30 minutes to properly warm up an oil-fired furnace, and you will probably have to make constant adjustments of the burner control valves. You will find it easier to first get a reducing flame, and then work down to a slightly oxidizing flame. If you start at the other end, you will be likely to mistake a highly oxidizing flame for one that is slightly oxidizing. You can test the atmosphere by throwing a block of wood into the furnace; if it chars, the atmosphere is reducing, and if it burns with a bright flame, the atmosphere is oxidizing.

Another test is to use tongs to hold a pie of new, unused zinc in the flame, for 30 to seconds. If the zinc is black when it is remov from the flame, the atmosphere is reducing. it is straw color, the atmosphere is sligh reducing. If it is bright and clean, the atmo phere is oxidizing.

When you are ready to charge the furnace, in the scrap metal first, and then place the ing on top. The ingots must never be exposed to t flame, so if they cannot go in with the scrap, t ingots must be preheated (so as not to lower t temperature of the charge), and added after t scrap begins to melt. As in using elect furnaces, place the metal in the shell rath than throwing it in; the better the treatment y give to equipment, the less work you will ha in maintaining it.

If you can keep a separate crucible for ea type of metal, you can greatly reduce the chan of contamination in successive heats. If this not possible, make a WASH HEAT before usi a crucible for a different metal. A wash h consists of melting a scrap charge of the sa composition as the metal to be melted; the scr charge will pick up the contamination t otherwise would remain and that the regular m would pick up.

When the furnace is to be shut down, the f valve must be closed first, and then the air val (the opposite of the lighting procedure). It important that you learn these sequences, a follow them.

MELTING PRACTICES

The melting procedures used for brass a bronze are essentially the same as those d scribed earlier in this chapter, in the section indirect-arc furnaces. The need for maintaini the proper furnace atmosphere calls for clos attention, however, when an oil-fired furnace used. This is particularly true when using t oil-fired furnace for melting aluminum, in ord to prevent the absorption of gases by the me Oxygen will unite with the aluminum to fo dross, but this is fairly easy to remove. It is t absorption of hydrogen that is most harmf hydrogen is dissolved by the aluminum and pr duces gas defects. It is necessary, therefore, see that the hydrogen is removed or allowed escape.

Ideally, aluminum charges should cons only of foundry remelts of known compositi and ingot material. Turnings and borings a difficult to clean, and in addition, their relatively large surface area can cause high oxidation losses. The best way in which to utilize machine turnings and borings is to thoroughly clean them, melt them down, and pour them into aluminum ingots that can then be used for charge material.

Use a graphite or a silicon carbide crucible for aluminum alloys. If a cast iron crucible is used, it must be given a refractory wash, so that the melt will not pick up any iron.

Temperature control is an extremely important factor in aluminum alloy melts. This metal temperature should never be allowed to go above 1400° F. Overheating will usually cause permanent damage to the melt; this damage cannot be corrected by cooling the melt back to the proper temperature. Never ake a chance on visual determination of temperature. With aluminum, always use an immersion pyrometer for temperature readings.

Degassing is an important step, if you are to prevent gas defects in the finished casting. When the temperature of the melt reaches 1250° F, a preheated tube is connected with a compressed gas cylinder of dry nitrogen, and hen inserted in the crucible, down to the bottom. The amount of gas introduced into the melt should be sufficient to cause a gentle bubbling action on the surface of the metal. The time period for maintaining the flow of gas is 10 to 15 minutes per 100-pound heat.

In shipboard foundries, nitrogen gas is supplied in two classes, oil pumped and water pumped. For fluxing aluminum, you must use the oil-pumped nitrogen, as that is the dry nitrogen. Water-pumped nitrogen contains a arge percentage of moisture, and its use as a flux would be harmful; in fact, no fluxing at all would be preferable to using water-pumped nitrogen. Do NOT use chlorine; employing it, either in solid or gaseous state, as a flux is strictly forbidden. Commercial fluxes and degassers are readily available from foundry supply companies. These fluxes and degassers are easy to use and do an efficient job of removing gasses from the molten metal.

After the fluxing operation, skim the surface of the melt; it is then ready for pouring.

Pouring temperatures are chiefly influenced by gating and risering arrangements, and by shape and thickness of casting section. They will also vary according to the composition of the aluminum alloy and the amount of metal. The range will be roughly from 1250° F to 1400° F. Gas pickup during the pouring operation will be held to a minimum if you form the practice of holding the ladle close to the sprue of the mold. Keeping the spruefull is a prime consideration; and the stream of molten metal should be as large as possible.

Babbitt and the tin-base antifriction metals in general are melted in an oil-fired furnace. A slow melting rate is preferred, and as soon as the babbitt begins to melt, the surface should be covered with powdered charcoal. This charcoal coating protects the metal from the air, and retards oxidation and the formation of dross. Of course, one disadvantage is that the coating must be removed before the molten metal is poured.

The melted metal is stirred from top to bottom, but not with a circular motion. Be careful to avoid splashing. The amount of metal melted should be much more than the required amount. Twice as much is not excessive. This oversupply will prevent chilling in the ladle. If an insufficient amount is melted and poured, the subsequent pouring that will be necessary will not bond with the amount first poured.

If two ladles must be used to pour the bearing, they should be prepared and poured at the same time; and if it is impossible to pour them simultaneously into the bearing, pour one ladle into the other while it is being poured into the bearing setup. The molten metal should be poured slowly, and in a thin stream.

Pouring temperature is extremely important in working with babbitt, since it influences the quality of the bearing. Too high a pouring temperature will increase the amount of shrinkage during solidification and will create severe shrinkage stresses. A high pouring temperature will keep the metal in the "mushy" stage for too long a period of time. The shrinkage stresses may produce cracks which will cause failure during service. The temperature needed at the end of melting will depend on the distance to the point of pouring. According to the *BuShips Foundry Manual*, the best pouring temperature for Grade 2 babbitt is generally 675° F to 690° F.

In general, melting time for an oil-fired furnace should be kept as short as possible, to lessen the chance of oxidation and gas absorption by the molten charge. As you acquire experience, you will learn when to cut off the fuel, for specific types of charge; you will also learn how to give due consideration to such factors as amount of charge and operating characteristics of the furnace.

If small additions of alloys must be added to the melt during tapping, to compensate for melting losses, you should tap metal to a depth of about 1 inch in the ladle, and then make the necessary additions. The material must be added in very small pieces, for if any of it fails to completely melt, it will cause a hard spot in the casting.

CHAPTER 6

MOLD MATERIALS

The function of a mold material is to mainin the shape of the casting cavity while the iolten metal is being poured into the cavity, nd until the molten metal has solidified. The iolding material, therefore, must possess cerin specific qualities: (1) strength to resist ie eroding action of the molten metal flowing ito the mold; (2) strength enough to support ie weight of the metal when the mold is being illed; (3) refractoriness to resist the high emperature of the molten metal without fusing; l) porosity (permeability) sufficient to permit ie escape of steam and gases that are genrated during pouring; (5) cohesiveness when ioistened, so as to provide sufficient bond to old the grains together; and (6) weakness suficient to permit the casting to shrink during olidification without setting up undue stresses nd strains.

In Navy foundries, silica sand is the maerial used; it possesses the essential properies and qualities, and it has the advantage of eing low in cost. Its clay content, either by tself or supplemented with additional clay and inders, makes it possible for the Molder to orm the sand into the required shapes, and inders serve to maintain the sand in place ntil the casting is poured and solidified.

A good molding sand may be considered to onsist of three major parts: (1) the sand rains, which provide the necessary refracoriness; (2) the bonding material or binder, hich may be clay occurring naturally in the and, or some additional material such as entonite or cereal flour; and (3) moisture.

There are many kinds of sands used in the oundry. These sands may be classified as ollows:

1. **Molding Sand.**—Sands containing 8 to 20 ercent AFS (American Foundrymen's Society) lay.
2. **Silica Sand.**—Sands containing a minimum f 95 percent silica.
3. **Bank Sand.**—Sands from sedimentary deposits containing less than 5 percent AFS clay.
4. **Dune Sand.**—Sands from wind-blown deposits containing a minimum of 90 percent silica.
5. **Miscellaneous Sand.**—Zirconium silicate, Olivene, etc.

A number of factors determine whether or not a given sand possesses the necessary qualities that make it suitable for molding purposes. These factors are to a great extent dependent upon each other. Because of this interdependence, the actual cause of a casting defect due to sand may lie in a combination of factors rather than in a single factor that is the apparent cause.

An understanding of sand terminology is the basis or foundation upon which the knowledge of molding and coremaking may be built. Therefore, before you can understand the subject matter related to mold materials, you must know the terms used in this specialized branch of foundry practice.

TERMINOLOGY

To the Navy Molder, certain properties of sand are more important than others, and equipment for testing for these properties is provided aboard repair ships. Then there are other properties, that are perhaps not so important in shipboard use, but with which the Molder should be familiar. The properties of chief importance are permeability, green compressive strength, dry strength, moisture content, clay content, and grain fineness.

Sand control is absolutely necessary to the production of good castings, and the only sure way of determining the properties of molding and core sands is to make tests. Sand requires periodic testing to ensure that it is in proper condition. Records of tests, with appropriate comments upon the types of castings made, and any defects which occur, can be of great assistance to the foundry shop in future jobs.

Testing sand to determine grain shape, grain class, fineness, and clay content are qualifications for advancement in rating to ML1 and MLC. However, since the interdependence of properties makes it difficult to give a clear and realistic picture of these sand properties without discussing them all, a brief discussion is necessary in this training course.

TEXTURE refers to the relative smoothness or feel of the sand. This texture is influenced by several factors, the most important of which are grain size, grain shape, grain distribution, and bonding agent. Although not important in itself, texture is significant because it is responsible for other properties or characteristics of foundry sands.

GRAIN SIZE may vary over a wide range. Some grains will pass only through a No. 6 or No. 8 sieve, whereas others will pass through meshes of a much higher number. The manner in which meshes are identified in terms of the size of the square openings has been described in Chapter 3, "Molder's Tools."

GRAIN FINENESS indicates the grain size of a sand expressed as a number. These numbers represent the average grain size of a carefully washed and dried sample, as determined by an analysis made by means of a series of interlocking screens or sieves. This procedure has been standardized by the American Foundrymen's Society, and the identifying numbers are therefore known as AFS Fineness Numbers.

Two sands having the same fineness number are not necessarily identical, since differences in grain shape, grain distribution, and clay content may exist. Such differences can affect the permeability and the potential strengths of the sands.

GRAIN SHAPE may be round, angular, subangular, and compound: round grains are fully spherical; angular grains are fractured particles having sharp edges and corners; subangular grains have partially rounded corners; and compound grains are those consisting of two or more grains cemented together in such a way that clay removal or sieve analysis fails to break them apart.

Angular grains cannot pack together as closely as rounded grains. As a result, sands with angular grains have a higher permeability than sands with rounded grains.

BOND, or BINDER, is the material added to a sand to hold the individual grains together, and provide a satisfactory molding material. The type of binder may be clay (fireclay, western bentonite, or southern bentonite), cereal flour, dextrine, or rosin.

The amount and type of binder used may affect three of the sand properties described later on—permeability, green strength, and dry strength. Effect on permeability depends upon the moisture content of the sand. For example, the addition of bentonite to a sand having a moisture content of 2 percent causes a rapid decrease in the permeability of the sand. When bentonite is added to a sand that has a moisture content of 4 percent, permeability at first decreases, but becomes fairly constant as soon as a 4-percent content of bentonite is reached.

When the moisture content of a sand is maintained at a given value, the addition of a clay binder will increase the green strength of the sand. This increase is greater when bentonite rather than fireclay is used. The use of southern bentonite produces a high green strength, and a low dry strength. It is often used where low dry strength is acceptable, because it promotes easy shakeout of the castings. It is also used for casting alloys that have a tendency to hot tear. Any bentonite-bonded sand can be given a higher dry strength by adding cereal flour and dextrine. In fact, the nonclay binders (cereal flour, dextrine, rosin) are often used as additives to support or to modify the action of the clay binders.

The cereal binders are wheat flour and corn flour. Their influence upon the properties of a molding sand is not identical. A corn flour binder has the effect of slightly improving the green strength, and decidedly improving the dry strength. Wheat flour contributes very little to the green strength, but improves the collapsibility of the sand.

Dextrine binders, being a form of sugar, produce a much higher dry strength than do cereal binders, but cause a reduction in green strength. Molasses is sometimes used as a substitute for dextrine, but its influence on the sand properties is weaker.

Rosin binders are used principally as core binders, or in sand mixes for dry sand molds.

After a rosin-bonded sand has been baked, it has a very hard surface. However, it will absorb moisture, and for this reason molds and cores that have been made with rosin-bonded sands should not be allowed to stand, but should be used as soon as possible after baking.

COLLAPSIBILITY has been noted as one of the properties of a sand that can be improved by using wheat flour as a binder. On first sight, it would appear that this particular quality would be an undesirable one. Nevertheless, it has a distinct advantage in core sands. When you come to the point of removing from a mold a casting in which cores have been used, you will find that if the core mix had insufficient collapsibility, it will be very difficult for you to shake out the cores.

The property of collapsibility goes hand in hand with that of hot strength; and these two qualities are discussed at somewhat greater length at the end of this section on sand terminology.

Mention of the ease with which a casting may be shaken from the mold brings us to a consideration of the REFRACTORINESS of a sand. This is the property that ensures that the sand used in the mold will strip clean from the casting. This resistance to high temperature depends chiefly upon the composition of the sand; for example, if lime is present in the form of calcium-oxide or calcium-silicate, it can lower the fusion point.

Even if the fusion point of the sand is high, the sand still may fuse to the casting if grain shape, grain size, and grain distribution are not uniform. The Molder must take precautions to select the right sand for the job at hand.

SINTERING POINT is the degree of temperature at which a given sand will break down and fuse onto the casting. The refractoriness of the sand is therefore frequently expressed in terms of its sintering point. It is obvious that the sand in the mold cavity must have the ability to withstand the temperature of the molten metal poured to make the casting. Sand suitable for aluminum castings might not be serviceable when heavy steel or cast iron sections are to be cast.

PERMEABILITY is the property that permits the passage of air, gases, or steam through the sand. Since it is the openings between the grains that permit passage of gases, permeability depends upon four factors: shape of the sand grains, fineness of the sand grains, type and amount of binder, and moisture content.

The permeabilities of four typical foundry sands are shown on the chart reproduced in figure 6-1. These foundry sands, as indicated by their grain fineness numbers, range from coarse to fine. The coarse sand has a high permeability, because of the greater proportion of large sand grains, and the larger voids between the grains. The other sands have lower permeabilities, because the average grain size, and the voids between grains, are smaller.

This chart also indicates the manner in which the permeability of each sand varies according to moisture content. As moisture is first added, it causes the clay particles to stick together, enlarging the spaces between grains. As more water is added, the excess moisture fills up these spaces between the grains, and the permeability decreases.

Free passage of gases through the sand is not always desirable, since rough castings may result. On the other hand, if the sand permeability is too low, blow holes or similar defects may occur because of the back pressure of gas that cannot escape through the mold. The permeability of a sand, therefore, must be considered in relation to the specific job for which it is being used.

In a foundry shop aboard a Navy repair ship or tender, regular sand testing should be performed and the results recorded. A day-to-day record of sand properties, when properly interpreted, enables the Molder to make any necessary corrections to the sand before

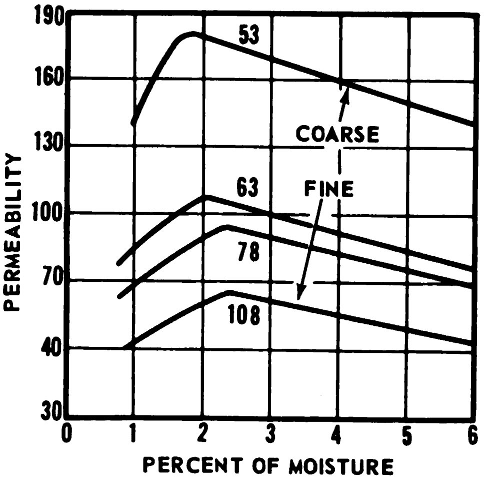

102.41

Figure 6-1.—Permeability of four typical foundry sands.

it is rammed up in molds. Some of these tests, as mentioned before, are the responsibility of the Molder First Class and Chief Molder, but the Molder Third Class must know how to test for permeability, as well as for green compressive strength and moisture content.

In taking the sample upon which the test will be made, you must work carefully. Your actual test specimen will be a rammed sample 2 inches high and 2 inches in diameter. In order to have this sample truly representative of the sand, you must begin with at least a quart of sand, taken from various sections of the sand heap, and from depths of at least 6 inches. This larger sample must be riddled through a riddle of the size commonly used in the foundry; then from this tempered sand, enough is weighed out to make the 2-inch sample.

This sample is placed in a tube which rests upon a pedestal, and tube and pedestal are placed under a rammer; the tube must be kept upright to prevent any loss of sand from the sample.

The type of rammer used aboard ship, with the specimen tube for the sand sample, is illustrated in figure 6-2. You can see that the rammer has been lowered into the tube until it is supported by the sand; this is the first step in the process, and should be performed slowly. Then the rammer is raised, still slowly, to the height of 2 inches, and permitted to fall. In all, three rams should be applied to the sample.

When the third ram has been applied, check the position of the top of the rammer rod. Unless it is between the 1/32-inch tolerance marks (indicated at the top of fig. 6-2), you will have to discard the specimen and make a new one. If the top of the rod is within the required tolerance, the specimen is of the correct height, and you should carefully raise the rammer rod and remove the specimen tube from the pedestal. You now have an acceptable sample, and can proceed with the test to determine permeability.

The equipment shown in figure 6-3 makes it possible to determine permeability by measuring the rate at which air under standard pressure will flow through a standard 2-inch specimen.

The tube containing the specimen, inverted so that the sand is in the top position, is placed in the mercury cup. Then the air chamber is raised to its proper position, released, and allowed to drop. When the water column in the manometer becomes steady, you should rotate the permeability dial until the end of the sc is on a line with the top of the water colu You can then read the permeability of t sample at the point indicated in figure 6- This permeability represents green perm ability.

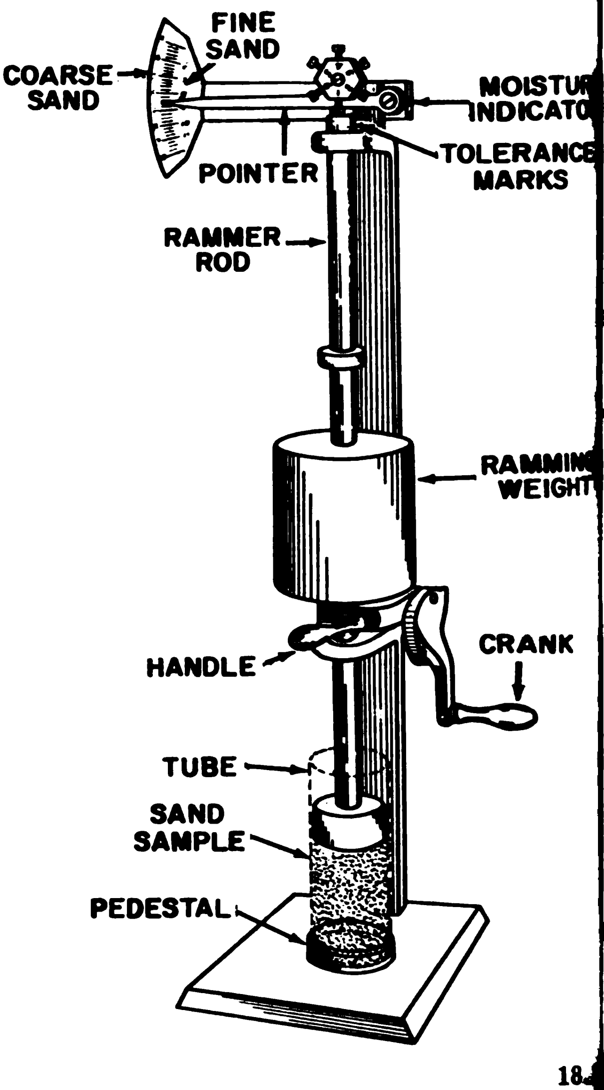

Figure 6-2. —Sand test sample and rammer.

If possible, take permeability readings o three different samples from the same lot o sand, and then take the average of these rea ings as the permeability, for control purpose

HARDNESS is a property that goes hand i hand with permeability. If the tamping is n properly done, hardness may vary through the mold. Tamping too hard in one spot, o allowing the mold to stand for any length o time during this process, can bring about a unevenness.

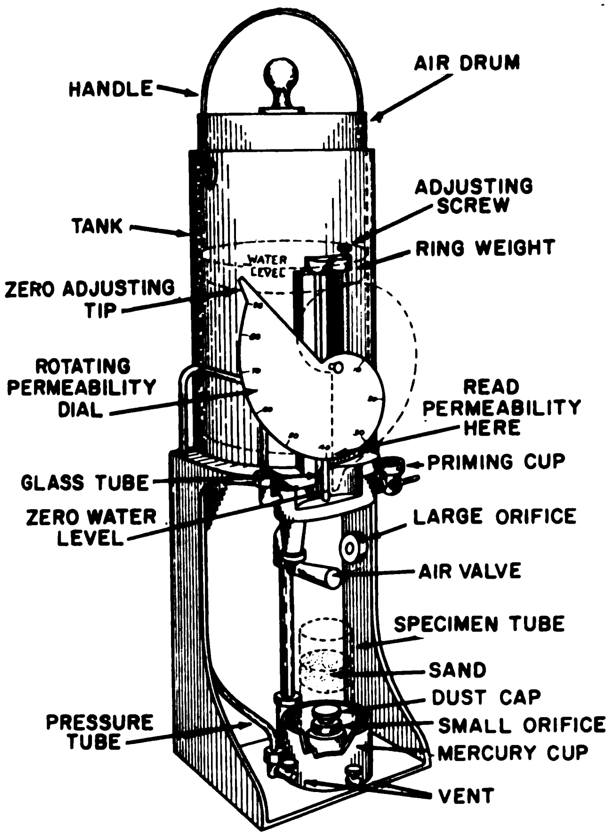

18.38

Figure 6-3.—Equipment for testing permeability.

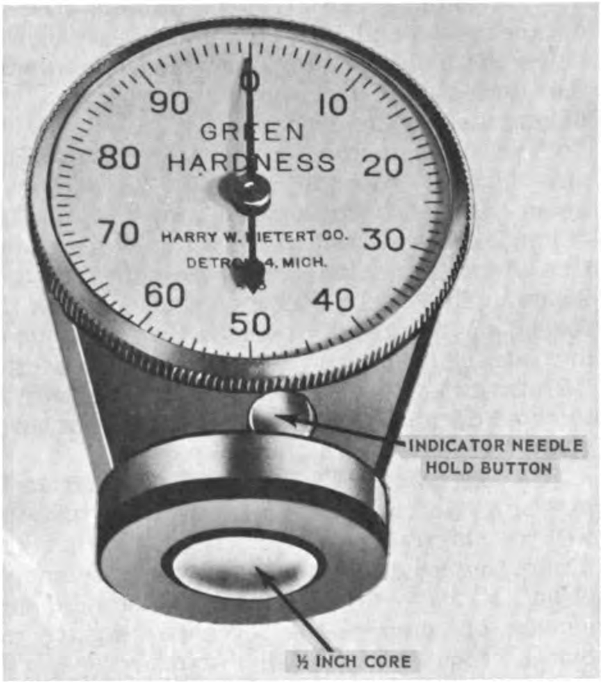

18.40X

Figure 6-4.—Device for determining surface hardness.

Aboard some repair ships or tenders, some sort of equipment for measuring surface hardness of a mold is available. The surface hardness tester shown in figure 6-4 is designed to measure mold hardness in a way similar to that of the Brinell hardness tester used to determine the hardness of metals; here, though, a 1/2-inch-radius ball is loaded with a 980-gram spring load. To determine mold surface hardness, bring the faceplate in firm level contact with the mold surface and read the hardness directly from the dial. Excessive pressure has no effect on the reading. If it is desired to hold the indicator needle at the hardness measured, depress the hold button. In practical terms, readings from 20 to 30 indicate a very soft surface of the mold; readings from 30 to 50 indicate a soft rammed mold; readings from 50 to 70 indicate a medium surface hardness; readings from 70 to 80 indicate a hard rammed mold surface; and readings from 80 to 95 indicate a very hard rammed mold.

FLOWABILITY is that property that enables sand to move freely and pack uniformly. Free movement ensures that the grains of sand will arrange themselves satisfactorily around the contours of the casting pattern. If the sand does not flow properly, the pattern details will not be sharply reproduced, and the casting will be inaccurate and probably unsuitable for use. Uniform packing ensures that the sand will ram up without the formation of voids on the face of the mold.

Round grains increase flowability, but the sand usually lacks the rigidity necessary to hold its shape after the mold has been rammed. A combination of round and angular grains, together with a uniformly distributed bonding agent and the proper moisture content, makes a suitable sand. The shape and distribution of grains in the available sands must remain to a large extent the responsibility of the supply department. In preparing his sands for specific jobs, however, the Molder can control bond distribution and moisture content.

STRENGTH of a sand may be expressed as dry strength, green strength, tensile strength, or shear strength. It is the property that enables the mold sand (or core sand) to withstand the forces that tend to disintegrate the mold during the casting process.

The same factors that control permeability also control strength; that is, the factors of grain fineness, grain shape, amount and type of binder, and moisture content. Mulling practice also affects the green strength of foundry sands. The effect which bond has can be different on the green strength than it is on the dry strength, as is explained in the section, "Binders." Both dry and green strength are affected in about the same way by grain shape, grain fineness, and moisture content.

GREEN COMPRESSIVE STRENGTH is the strength factor with which the ML3 and ML2 will be chiefly concerned. This is the strength of molding sand just after it has been tempered. Green strength is expressed as the number of pounds of compressive force per square inch that is required to crush a standard specimen. This psi figure represents the strength which the molding sand must have in order to withstand handling during the molding operation, and to maintain the shape of a mold that is poured soon after completion. Green compressive strength is easily the most useful property of the foundry sands used in Navy foundries.

Green strength is generally higher in the finer sands, because the smaller grain size makes for a greater area of contact between the many grains. An equivalent amount of coarse sand will have a much smaller contact area between grains. As sand changes from coarse to fine, its green strength increases.

Figure 6-5 indicates the relative green compressive strengths of sands of the grain class numbers frequently used in shipboard foundries. The corresponding fineness number range for each class is also shown; the higher the fineness number, of course, the finer the sand. Actual differences between green strengths will not be as clearcut as suggested by the graph. There will always be some degree of overlapping between areas, depending upon differences in sand grain distribution within sands having the same fineness numbers.

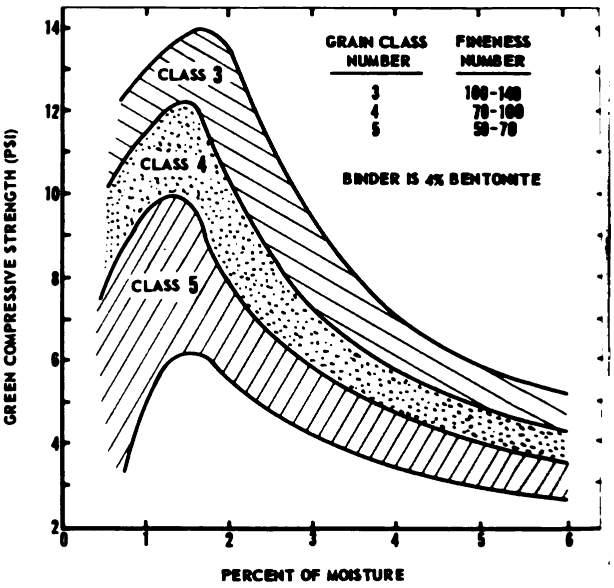

102.41

Figure 6-5.—Green compressive strengths for sands of different grain class numbers.

To test sand for its green compressive strength, prepare a specimen sample in the same manner as described in the test for permeability. In fact, a specimen already used for a permeability test will be suitable if it has not been damaged in the previous test.

The sample must then be stripped from the tube with the stripping post, and placed between the compression heads of the lower part of the strength testing equipment. Be careful to seat the specimen correctly, and to have the face that was the top face during ramming, positioned against the right-hand compression head. Figure 6-6 shows the sand specimen placed in the testing equipment.

As the arm on the test apparatus is raised, the rate of motion can affect the test results, so you must be careful to maintain a slow and uniform speed of operation. If the arm is raised by a motor-driven operation, rate of motion is automatically controlled. When the specimen breaks, the motor automatically reverses, and returns the arm to the bottom position. With hand operation, the arm must be returned manually.

A small magnetic rider on the scale against the compression head moves as the arm is raised, but remains in the position attained by the arm when the specimen breaks. Read the green compressive strength of the sample from the back of this rider, on the appropriate scale.

There are three general rules that you should follow to ensure maintaining this testing equipment in good operating condition:

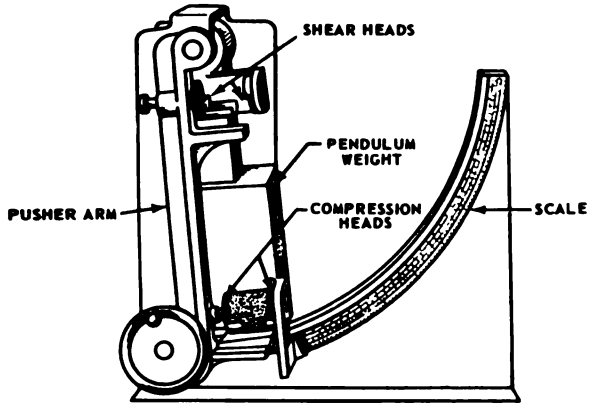

18.39

Figure 6-6.—Strength testing equipment.

1. After each test, be careful to remove all the sand from the broken specimen.

2. Give special attention to keeping grains of sand and dirt out of the bearings.

3. In lubricating this testing equipment, use only graphite or a similar dry lubricant.

MOISTURE content of a sand has an effect on green strength that is similar to its effect on permeability. Green strength increases with added moisture up to a point where it reaches maximum strength; it then starts to decrease with added moisture. In general, moisture has the same type of effect upon the dry strength of a sand, although the type of binder introduces variations.

Inasmuch as moisture can vary without any change being made in grain fineness or grain shape, moisture tests must be made before sands are used for specific jobs. Moisture content of a particular sand must be a certain amount at the end of the mulling period. For this reason, the discussion of testing for moisture appears in a later section, "Preparation of Foundry Sands."

HOT STRENGTH is the strength that a molding sand has when it is at the pouring temperature of the specific metal. It is the strength that the sand mixture must have if it is to retain the mold shape before solidification of the molten metal starts. (Do not confuse it with retained strength, which is the strength of the molding sand after it has been heated by the molten metal, and then allowed to cool to room temperature.)

Hot strength and collapsibility are two properties that must be considered together. The ideal foundry sand should have a high hot strength and a good collapsibility; however, this combination is a difficult one to attain unless a very close control of the sand has been maintained during processing. Testing for these two properties is not possible with the equipment available aboard ship, and determinations have to be made on the basis of observation. You can check on hot strength and collapsibility by observing the sand when you shake out a casting. If you have difficulty in removing the sand from deep pockets, it lacked adequate collapsibility. If you find a hot tear in the casting, the sand lacked collapsibility, or the hot strength was too high.

DURABILITY of the molding sand is that property that enables the sand to retain its clay content in a state of fine subdivision or dispersion after the pouring of the molten metal. The durability is the result of a number of factors. Clay that is in the molding sand in its natural state or is added to the sand, is distributed over the surface of the individual grains when the molding sand is properly mixed. When the molding sand has moisture added for tempering, the distributed clay in the sand will become sticky and adhere to the individual grains of sand. In addition, the clay also closes up the openings or voids between the grains, giving the molding sand strength and permeability.

When molten metal comes in contact with the molding sand, the sand is overheated, causing the clay to be converted into grains. Therefore, when the sand is retempered for use, the grains (converted clay) will not soften and become sticky again. The clay that remains in the molding sand will be redistributed over the sand grains. However, repeated use of molding sand thins out the coating of clay on the sand grains and decreases strength and increases permeability. Clay content of the molding sand can be restored by adding clay in the proper amount and mixing and working the sand thoroughly in a sand muller.

It is, therefore, necessary to control the amount of clay added to the sand in order that both strength and permeability may be maintained. The addition of clay to the used sand may be accomplished by two methods: (1) adding unused (new) molding sand, or (2) adding small quantities of a suitable clay. The addition of either material is merely a corrective measure in the control of the clay content of the heap sand.

At the beginning of this section you were told that the various properties of foundry sand are to a great extent dependent upon each other, and that no single factor can, by its proper control, ensure that the casting you produce will be satisfactory. Now that you have learned something about the most important properties, a summary of how variations in specific factors can affect the casting (Table 6-1) will be a helpful guide to you in your actual work.

By watching the shake-out period and the cleaning of a casting, it is possible to note a trend toward a possible defect in the casting before it becomes serious. A small alteration in the molding sand mixture will probably straighten out the difficulty. It is better to make small changes in the molding sand mixture at frequent intervals than to let things go until a drastic correction is necessary.

The following information may be used as a guide in controlling the various sand properties:

1. To increase green strength (prevent drops)—increase bentonite, dextrine, and/or woodflour.
2. To increase permeability (prevent blows)—increase corn flour, and/or new sand.
3. To increase hot and dry strength (prevent cuts and washes)—increase bentonite, moisture, and/or dextrine.
4. To increase shakeout (reduce retained sand strength)—increase southern bentonite and woodflour; decrease western bentonite, moisture, and corn flour.
5. To increase flowability (reduce deformation and stickiness)—increase woodflour, southern bentonite, and/or moisture; decrease western bentonite.
6. To increase deformation (increase workability, liftability, and patchability, and reduce flowability)—increase corn flour, western bentonite and/or moisture; decrease woodflour, and/or southern bentonite.
7. To reduce sand expansion defects (rat tails, buckles, scabs)—increase woodflour, perlite, corn flour, new sand, and dextrine.
8. To reduce drying out (weak mold edges)—increase corn flour, dextrine, moisture, or oil; decrease woodflour.
9. To reduce burning on (easier to clean)—increase woodflour, corn flour, dextrine, and/or sea coal.

As a prevention against the production of defective castings, a day-by-day testing procedure, if possible, should be carried out in the foundry, to make sure that the molding sands are in proper condition. Records of the test results should also be kept, and studied to determine the causes of any casting defects that occur.

As an ML3 or ML2, you must be able to test for green strength, permeability, and moisture content. The first two tests have already been described; the moisture test will be discussed in connection with mulling.

FOUNDRY SANDS AND RELATED MATERIALS

As previously mentioned, grain shape may be round, angular, subangular, or compound. In addition, foundry sands may also be graded as open or close, coarse or fine, and as strong, medium, or weak. An open grade sand has a high permeability and contains a greater proportion of large grains. A close grade sand has a low permeability and contains a greater proportion of fine grains. Coarse and fine grades refer to the grain size. A strong sand is one containing a large amount of clay or binder; a medium sand contains a lesser amount of clay or binder; a weak sand contains a still lesser amount of clay or binder.

Foundry sands may be of two types, natural bonded and synthetic. A natural bonded sand contains a sufficient amount of clay bond—either present when the sand was taken from its deposit site, or added before shipment—to make the sand suitable for immediate use. Adding moisture and tempering the sand is the only treatment necessary in the foundry shop. A synthetic sand is one made by mixing correct proportions of an unbonded sand and a suitable binder such as clay, and then tempering the mixture.

The molding and core sands stocked at Navy foundry activities must meet established specifications, but the tolerances are broad enough to accommodate the variations due to weather, production methods, and type of work that must be produced. Activities usually have natural bonded silica and unbonded washed silica. Natural bonded sand must meet American Foundrymen's Society (AFS) standards; the unbonded sand is a synthetic. However, stocks on hand are generally limited to a 6 months' supply, and it may frequently become necessary to procure additional supplies locally. It is important, therefore, that Navy Molders be familiar with sand properties and characteristics, and know how to test for them.

Table 6-1.—Effects That Variations in Specified Factors in Molding Sand May Have Upon Castings.

Factor	Variation	Effect
Grain fineness	Sand too fine	Permeability reduced, green strength increased. Possible defects: blisters, pinholes, blowholes, scabs, misruns.
	Sand too coarse	Permeability increased, green strength decreased. Possible defects: rough casting surface, and metal penetration.
Binder	Too much binder	If moisture content is too low, permeability decreased, green strength increased. Possible defects: hot cracks, tears, scabs.
	Too little binder	Permeability high, green strength low. Possible defects: drops, cuts, washes, dirt, and stickers.
Moisture content	Too high	Permeability and green strength decreased. Possible defects: blows, scabs, cuts, washes, rat tails, pinholes, metal penetration.
	Too low	Permeability and green strength too low. Possible defects: drops, cuts, washes, and dirty castings.

Synthetic sands (including the all-purpose sand favored by the Navy for shipboard use), as well as natural sands, have all the properties discussed in the preceding section of this chapter.

NATURAL BONDED SANDS

The space for sand stowage aboard ship is limited, and consequently you will find only a limited number of grain class numbers (probably grain classes 3, 4, and 5) available in your foundry. Grain class 3 sand is a fine sand, the majority of whose grains are within a fineness number range of 100-140, as is indicated in figure 6-5. Natural bonded sands of this class are suitable for lightweight, thin-sectioned, nonferrous castings, where the use of a coarse-grained sand would produce a rough surface finish. Coarse-grained sand is suitable for use on steel castings; however, in a Navy foundry, synthetic sand is more commonly used for casting iron, steel, or Monel.

One of the advantages of a natural bonded sand is that it often can be used (with moisture added) in the form in which it is received. Its chief advantage is that it has a wide working range for moisture, and can maintain its moisture content over a long period of time. This makes for easier patching and finishing of molds.

A disadvantage is that the properties of a natural sand vary; indeed, there can be variations between the natural sands supplied by a single producer. To render a sand suitable for a specific use, it is sometimes necessary to make additions of bentonite. Natural sand to which bentonite has been added is generally called semisynthetic sand.

SYNTHETIC SANDS

The term "synthetic sands" has become the accepted term for designating what are actually compounded sands. These sands are made by mixing together the various individual materials that constitute a good molding sand. A naturally occurring sand having a very low clay content (or washed to remove the natural clay) is used; to it must be added a binder, such as bentonite.

The advantages which synthetic sands have over natural sands are as follows: grain size is more uniform; the sand is more refractory; the sand can be molded with less moisture; less binder is required; the various properties can be more easily controlled.

To meet the limitations of stowage space, the Naval Research Laboratory has developed a synthetic sand known as an all-purpose sand. The base is a sharp silica sand which in its natural state contains little or no clay, or which has been processed to reduce the clay content to less than 1 percent. (The term sharp as applied to sand does not refer to grain shape, as might be supposed, but rather indicates that the sand is very low in clay content.) By adding small amounts of binder and of water to this silica base, you can obtain a wide range of properties.

The silica sand aboard your ship will probably include the grain classes 3, 4, and 5. Class 3 is used chiefly for nonferrous castings; class 4 can be used as a core sand for all but the heaviest castings; class 5 is a molding and core sand suitable for heavy iron and steel castings.

The interrelation between type and amount of binder, green strength, dry strength, and permeability has already been mentioned; you can understand, therefore, that varying the binder or the amount of moisture will bring about variations in the properties of the sand. As a practical example, let us consider a sand that has an AFS fineness number of 63. This falls in the middle range of all AFS fineness numbers. Look back at figure 6-5; the range of 50-70 includes coarser sands, and the 100-140 range includes finer sands (of the classes available aboard ship).

Suppose that to this all-purpose sand of AFS 63 Fineness you add 4 percent bentonite and 4 percent moisture, and that upon testing, you find that the sand has a green compressive strength of 4.5 psi, and a permeability of 95. For the purpose of your specific job, this green strength, let us say, is too low. The permeability, however, is entirely satisfactory. To change this sand so that it will possess the desired properties, you can add bentonite until it amounts to 5 percent of the mixture. At the same time, decrease the moisture to 3 percent. The new combination will have a green strength of 7 psi, and its permeability will remain at 95. Only a nominal change will have occurred in dry strength; probably it will have been reduced from 110 to 100 psi.

To take another example, suppose you have added 4 percent bentonite and 4.5 percent moisture to a mixture, obtaining a molding sand with a green compressive strength of 4.5 psi, a permeability of 90, and a dry strength of 120 psi. When you reach the stage of shaking out the casting, you have difficulty in removing it, or you find that hot tears have resulted. This indicates that the dry strength of your molding sand was probably too high. For your next casting, you should add the same amount of bentonite, but decrease moisture content to 3 percent. This latter mixture will have a green strength almost the same as that of the first mixture (about 5 percent); permeability will be 105; but dry strength will be about 90 psi, a much lower figure than in the first mixture.

From these examples, you can see that getting a molding sand of the correct composition is a matter that calls for care and exactitude. In these examples, too, only bentonite was added as a bond. You must learn how to add other binders to improve green strength or dry strength. Some practical hints are given you in the later section, "Preparation of Foundry Sands."

In using an all-purpose sand for all types of casting, the major factor that you will sacrifice will be surface finish. In a commercial foundry, this might be a very important factor, but aboard ship it is not a major requirement. Your principal purpose is to produce serviceable castings, and as long as all-purpose sand is satisfactory in this respect, its advantages for shipboard use outweigh its disadvantages.

BINDERS

In the section, "Terminology," you were told that the binders commonly used are fireclay, bentonite, cereal flour, dextrine, and rosin. Binder materials are mixed into sand, as you now know, to produce required properties. These binders are used not only in molding sands but also (as you will see later) to produce the desired qualities in facing sands, core sands, and mold washes.

You may sometimes hear binders referred to as organic or inorganic; inorganic binders are those derived from nonliving substances, and organic are those derived from living substances.

INORGANIC BINDERS are the various clays, including bentonite; sea coal, graphite, and plumbago also belong in this category.

Bentonite is better than fireclay for increasing the green strength of a sand, and southern bentonite is better for this purpose than western bentonite. The latter, however, has a higher dry strength and higher hot strength than southern, and is more durable. On the other hand, the lower dry strength of the southern bentonite makes the shaking out of a casting easier. As a general rule, you will find that western bentonite is best to use when you are preparing sands for steel and iron castings, and southern bentonite is more satisfactory for molds for nonferrous castings.

ORGANIC BINDERS are those obtained from wheat, corn, sugarcane, and similar living organisms. The starch in cereal binders serves primarily to promote dry strength. When the sand mixture is baked dry, the starch also produces a hard surface, which enables the sand to resist the erosive action of the molten metal as it enters the mold. A hard surface also serves to make a mold wash adhere more firmly.

As mentioned before, in the section, "Terminology," dextrine contributes a much higher dry strength than cereal binders, but reduces green strength. Glucose and molasses may be used, but are much less efficient than dextrine.

ROSIN BINDERS are made from a byproduct of turpentine, and may be available to you under various trade names. Rosin will give the sand mixture a hard surface when baked, and permits baking at a temperature lower than that required when other types of binders are used. Sand in which rosin has been used as a binder will absorb moisture if permitted to stand for any length of time, and molds and cores that are made with this binder should be used soon after preparation.

SPECIAL FACING AND PARTING MATERIALS

Special facing materials are used on patterns, to make sure that they can be withdrawn from the mold without breaking the sand. Facing sand is used on thin-sectioned steel or iron castings that must have an accurate and smooth finish. Among the materials used for these purposes are graphite or carbon substances (charcoal, sea coal, plumbago), ground nutshells, and silica-flour facing sand.

The graphite or carbon materials can be applied to the pattern with a spray gun, or lightly dusted on with a brush. Powdered soapstone (talc) or ground and powdered nutshells should be applied to the drag part of the pattern before the drag is rammed. They should be applied to the cope part, and to the parting line, before the cope is rammed. These parting materials should be so fine that they have a soft and greasy feel. When you use them, you should be able to open the mold and remove the pattern without disturbing the sand.

With experience, you will learn just how much parting material to use. An excessive amount will absorb moisture from the molding sand, and ball up; as a result, the surface of your casting will be impaired.

As stated before, the castings made in shipboard foundries seldom require smooth, flawless finishes, such as are given in commercial foundries and in Navy shipyard foundries. You should, however, know how to use facing sands to produce these smooth finishes.

A silica-flour facing sand used for steel castings from 100 to 1,000 pounds would probably be composed of 96.6 percent all-purpose sand (grain class 5), 3.0 percent bentonite, 0.4 percent cereal, and from 2.2 to 2.7 percent water. For lightweight castings, up to 100 pounds, use 94.0 percent all-purpose sand, 5.0 percent bentonite, 1.0 percent cereal, and 3.0 percent water.

Only those areas that form the mold cavity are faced with this sand; the rest of the mold is usually rammed with an old sand. For small castings, you should riddle the facing sand over the pattern to a depth of from 1 1/2 to 2 inches.

For iron castings, it is usual to add sea coal to natural bonded sand, to fill the void spaces and thus perform the same function as does silica-flour sand. The sea coal serves an additional purpose, in that it coats the mold cavity and the surface of the molten metal with a fine soot. This thin wall is of no measurable importance as far as casting size is concerned, but it prevents the molten metal from penetrating the sand surface of the mold cavity, and produces a casting surface that is smooth and free from oxidation.

SUBSTITUTE MATERIALS

If raw washed silica sand is not available, reclaimed backing sand may be used for facing if properly bonded. Some beach or dune sands (relatively free from crustaceous matter and feldspar), some fine building sands, and some natural sand deposits containing clay, may be used. If bentonite is not available, portland cement, fireclay, or some natural clays may be used. Corn flour may be replaced with ordinary wheat flour. Sugar or molasses will take the place of dextrine. Wherever substitutes must be used, the amount of organic materials and clay should be kept to a minimum and the amount of good clean sand grains to a maximum.

When portland cement is used as a bonding material instead of clay and cereals, the mixture should contain 11 percent cement by dryweight, and 7 percent moisture. Molds are then made as though regular molding sand were being used, and

are allowed to set for 24 hours to 72 hours, depending upon the size of the mold and the type of cement used. The mold is then hard enough to be used without flask support.

The use of portland cement as a bond material for molding sand is known as the "Randupson" process. The moisture and portland cement must be carefully weighted and balanced to prevent casting difficulties. When the recommended 11 percent of cement by weight is used, the moisture should not be allowed to exceed 8 percent or be below 5 percent by weight, since a critical hydration of the cement is necessary for the successful use of this process. If the moisture content is not carefully controlled, this process is EXTREMELY HAZARDOUS. Clay and cereals, in all forms, must be avoided in cement bonded sands, and backing sands containing clay cannot safely be used with cement bonded facing sands. As prepared for use, cement bonded sands have low green strength, similar to that of an oil-bonded sand, and must be handled in a similar manner. They have excellent flowability, and as a result give good pattern reproduction. However, this process shall not be used, except ONLY as an alternate emergency measure.

CORE SANDS

Core sand mixtures have as their basic ingredient a sharp, washed, clay-free, nearly pure silica sand. The fineness of the sand to be used depends largely upon the size of the core, and the metal to be poured. All of the properties that were described in the preceding section on molding sands also apply to core sand. However, three major factors govern the properties of sand: (1) baking time and temperature, (2) type of core binder, and (3) collapsibility. (For further information on cores, see chapters 8 and 9 of this training course.)

MOLD WASHES

A wash is applied to the surface of a mold or core to prevent erosion of the sand due to the flow of molten metal, and also to prevent metal penetration of the sand. The wash must be made from silica-flour sand, and must have a relatively high water content. The bonding materials are the same as those used in molding sands, and a small amount of sodium benzoate is added to prevent the mixture from becoming sour. Powdered graphite is sometimes used as a dry mold wash, and is brushed on the mold surface.

In most cases, green or dried sand mixtures produce satisfactory casting surfaces without the use of a mold wash. If a mold or core wash is absolutely necessary, it should be mixed according to the following formula:

Material	Weight Percent
Silica flour	64.0
Bentonite	1.5
Dextrine	3.0
Sodium benzoate	0.2
Water	31.3

First, you should thoroughly mix the dry materials in a closed container; then add the water, and again mix thoroughly. Apply it to the mold or core with a brush (or spray gun); a brush can be used on a dry sand core or mold, but a green core must be sprayed.

It is most important that a washed mold or core be completely dry before it is used. Any excess moisture on the surface will form steam when the hot metal contacts the sand, and the steam may cause serious defects in the casting.

A core wash made from a silica base, as described above, is satisfactory for brass and bronze castings, where erosion and penetration are problems. For phosphor bronzes and high-lead alloys, a paste made of plumbago and molasses water is suitable. When you use a plumbago core wash, you should apply a thin coating of regular core wash afterwards.

PREPARATION OF FOUNDRY SANDS

From the previous discussion in chapter 4, you may recall that the proper preparation and the control of molding sands and core sands is an important phase of foundry practice. However, we are concerned with the equipment and the devices used in mixing and testing the moisture content of foundry sand. In this section, we are concerned with the procedure (including the amounts of ingredients employed) for mixing suitable sands.

The manner in which the plows and rollers of a sand muller operate to thoroughly knead the mixture of sand and bond has been described in chapter 4. In addition there will probably be a manufacturer's technical manual, or similar set of operating instructions, for the type of muller installed aboard your ship. Such instructions will ive you the necessary information on clear-nces to be maintained between the muller wheels nd wear plate, and on the time period to be llowed for mixing.

The length of time that you should give to ixing is one of the practical problems con-ronting the beginner. A general rule is that you ill obtain the best results by mixing the dry and and dry bond for at least 1 minute, so as o evenly distribute the bond throughout the sand. hen add a small amount of temper water, mix he sand again, and the remainder of the temper ater, and complete the mixing process. Total ixing time after you add water should be reater for facing sands than for backing sand. or a batch of sand from 4 to 5 1/2 cubic feet, ixing time for backing sand should be about minutes, after water additions have been made; or facing sands, mixing time is 5 minutes. For batch that is only 3 cubic feet, allow 1 minute or backing sand, and 1 1/2 minutes for facing ands. Extending the time spent in mixing will ot increase the green strength of the sand. llowing the sand to mix in the muller for an xtended period of time will cause water content o drop appreciably (by evaporation), and will hange the properties of the molding sand.

When circumstances require that the sand be ixed by hand, you must use a greater amount f binder than you would use with the same mount of mulled sand. As a result, hand-mixed and has a lower permeability than mulled sand f the same green strength. Add the binder in small amounts, in the dry condition, and mix horoughly after each addition. When dry mixing s completed, add the temper water a little at a ime. After the sand has been completely mixed, ou should pass it through a 3- or 4-mesh riddle, nd then permit it to stand for several hours at east.

Remember that you should test sand for moisture after it has been mulled (or hand-mixed), and before you ram it in the mold. You may use the moisture tester illustrated in figure 4-3 or the one illustrated in figure 6-1 if the latter type is available aboard your ship.

To use the equipment illustrated in figure 6-7, place a 50-gram specimen sample in the sample pan, and place the pan in the holder. Setting the timer automatically starts the dryer, which will run for the set time interval (3 minutes). At the end of the drying time, remove the pan and weigh the sample. Multiply the difference between the dry weight and 50 grams by 2; the result is the percent of moisture in the tempered sand.

MIXING NATURAL BONDED SANDS

The preparation of a NATURAL BONDED ALBANY SAND for nonferrous molding does not offer any special problems. The sand mixes readily with water and does not require the use of a sand muller. The usual procedure is to sprinkle water over the heap of sand, mix it with a shovel, and then pass it through a 2- or 3-mesh foundry sieve.

Before adding moisture, however, the dry sand should be riddled to break up lumps and spread out on the foundry floor in the form of a long, low heap of considerable length. Sand spread out in this way exposes a greater area to which water may be added. The water should be added slowly and in small quantities while, at the same time, you continuously work the sand back and forth with a shovel. Water additions should be made with a sprinkling can to avoid the formation of pools of water.

When enough water has been added to provide a moisture content of 6 1/2 percent, the sand is passed through a riddle a second time and then piled into a heap. This heap is covered with damp burlap sacks to prevent surface drying. After mixing, the sand should stand, or "temper," in the moist condition for several hours—preferably overnight.

In the preparation of natural bonded sands, moisture content is the most important factor controlled by the Molder. Of course, the sand must also be sufficiently permeable (a minimum of 25), possess satisfactory green compressive strength (5 to 8 psi), and have the proper proportion of bond (clay). If the green strength is too low, you will have to add enough new sand to the heap to bring the strength value up to normal. Additions of this kind may be made by hand, but a better job of mixing results when a sand muller is utilized. Moisture may be more accurately controlled if a moisture tester is used instead of the "handful and squeeze" method.

MIXING SYNTHETIC SANDS

To mix the Navy sand known as all-purpose sand, only a few ingredients are required. Assemble and carefully weigh the dry ingredients; then place them in the muller, and mix DRY for about 1 minute.

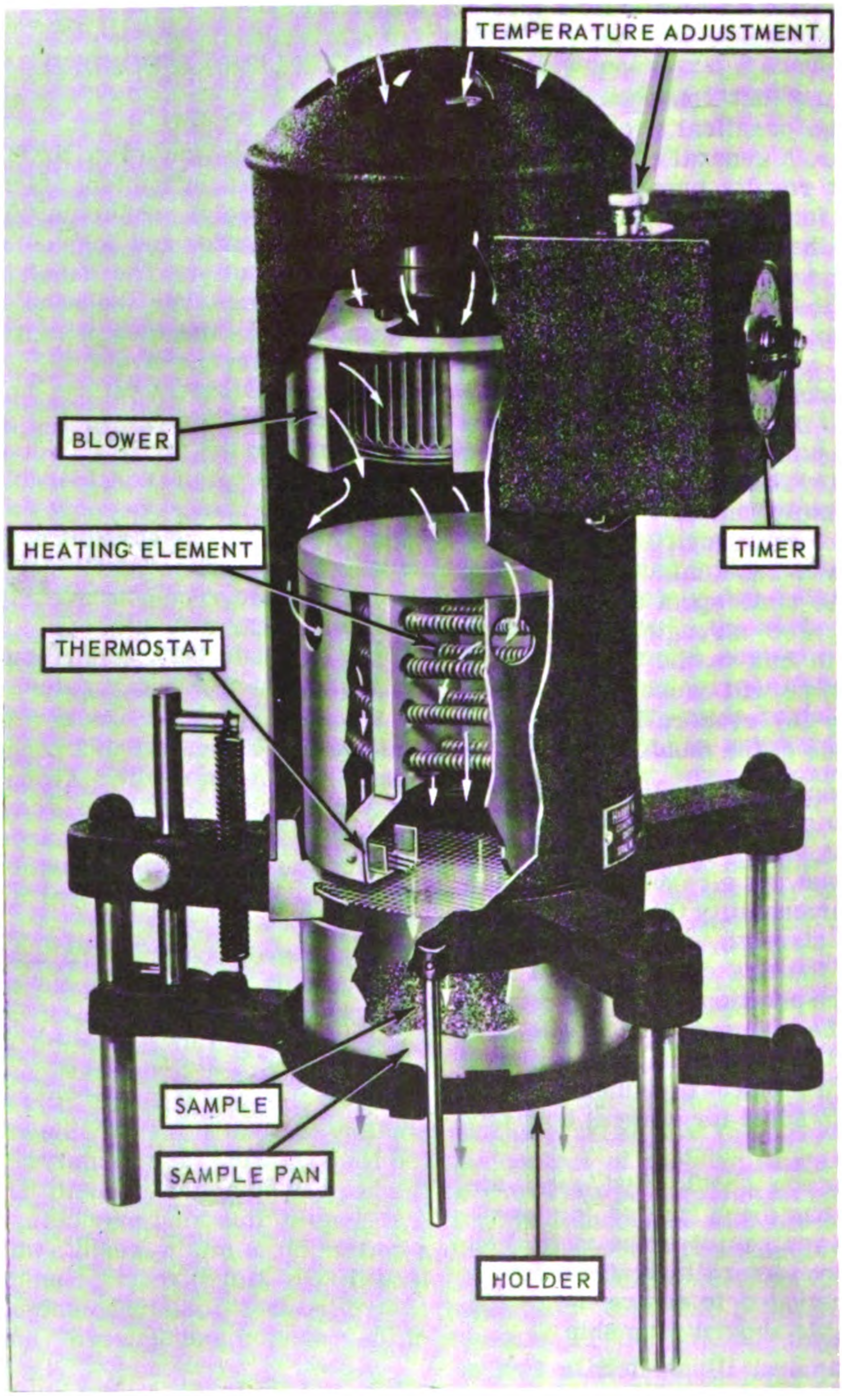

102.43

Figure 6-7.—Equipment for drying sand specimens for moisture determination.

Suppose you wish to prepare a 50-pound batch of molding sand that will have the composition of 95 percent sand, 4 percent bentonite, and 1 percent cereal. Multiply 50 by these percentages, as follows:

50 times 95 percent = 47.5 pounds of sand
50 times 4 percent = 2.0 pounds of bentonite
50 times 1 percent = 0.5 pound of cereal

Then place these amounts in the muller, mix them thoroughly, and begin adding the necessary amount of water. Table 6-2 provides you with guidelines that you can follow when you are making sand mixes from green sand, for castings of various metals and different sizes. Most of your work as a ML3 or ML2 will be with copper-base alloys, but some data on sand mixes for ferrous alloys are also included in this table.

If you find that the properties obtained with the all-purpose sand aboard your ship do not match exactly with those given in table 6-2, remember that the information in this table is offered as a guide only. Local conditions may make it necessary or desirable to alter proportions of the ingredients; but keep in mind the effect that variations in binder can have on the properties of the sand.

All-purpose sand will not flow around a pattern as freely as natural bonded sand; this is because of higher green strength, lower moisture content, and greater grain uniformity of the all-purpose sand. Therefore, synthetic sands must be rammed as hard as possible; if the natural bonded sand is rammed too tightly, casting defects will result.

The surface of a mold made with the synthetic sand dries out more rapidly than the surface of one made with natural bonded sand, because of lower moisture content. This surface drying can be offset to a great extent if you use a properly shellacked pattern (which will not so readily absorb moisture), and avoid excessive tooling.

Table 6-2.—Composition and Properties of Sand Mixes for Castings of Specified Alloys.

Grain Class	Fineness Number	Material (percent by weight; total weight of dry materials = 100 percent)					Properties and use
		Sand	Bentonite	Cereal	Other Binder	Water	
Copper-Base Alloys							
3	100-400 ...... Used heap ...	20.0 75.0	5.0	.....	....	4.0	Green strength 15 to 20 psi; permeability 30-50. Used for castings up to 2000 lb.
3	100-140 ...... Used heap	15.0 80.0	4.0	.....	1.0 (Woodflour)	4.5	Green strength, 14 to 15 psi; permeability 30-35. Used for castings up to 10 lb.
5	50-70	95.0	4.0	1.0	....	4.0	Green strength, 6 to 7 psi; permeability 60-70. Used for castings up to 2000 lb.
Aluminum Castings							
3	100-140	74.0	3.0	.....	18.5 (Silica flour) 4.5 (Fireclay)	5.0 to 5.5.	Green strength 8-10 psi; permeability 20-30. Used for castings up to 20 lb.
Gray Iron Castings							
4	70-100	89.4	5.3	.....	5.3 (Fireclay)	2.8	Green strength 8.3 psi; permeability 110. Used for castings from 1 to 30 lb.
4	70-100	94.0	4.1	0.2	1.7 (Sea coal)	4.4 to 5.5	Green strength 10.2 psi; permeability 76. Used for castings from 150 to 800 lb.
Steel Castings							
5	50-70	95.0	4.0	1.0	....	3.5 to 4.5	Green strength 6.5 to 7.5 psi; permeability 135-150. Used for castings up to 200 lb.

Table 6.2—Composition and Properties of Sand Mixes for Castings of Specified Alloys—Continued.

Grain Class	Fineness Number	Material (percent by weight; total weight of dry materials = 100 percent)					Properties and Use
		Sand	Bentonite	Cereal	Other Binder	Water	
Steel Castings—Cont'd							
5	50-70. . . . . . . Used heap . . .	57.5 40.0	1.8	0.7	. . . .	2.5 to 3.5	Green strength 3 to 4 psi; permeability 175-200. Used for castings 50 lb. and over.

CHAPTER 7

MOLDS AND MOLD CONSTRUCTION

A number of different materials (loam, cement, plaster of paris, metal) may be used for constructing molds, but in the Navy foundries the basic molding material is always sand. This sand may be natural bonded, or it may be synthetic. From your study of Chapter 6, Mold Materials, you have learned the importance of proper mixing of the sand, and control of the moisture content.

Besides the factor of good sand control, there are a number of other requirements that must be met in constructing an adequate mold. The sand must be properly rammed; the pattern must first be properly set in the mold, and later properly withdrawn; the system of sprues and gates must be designed so that the molten metal will flow freely into the mold cavity; risers must be provided, in all but the simplest castings, as a reservoir of hot metal to compensate for shrinkage as the casting solidifies; and molds must be vented to permit easy escape of gases.

Some applications will require the use of cores (see chapters 8 and 9), to provide for internal cavities, bolt holes, bosses, and so forth, on the finished casting. It may be necessary to use chaplets to hold such cores in place. In occasional cases, facing nails must be used to lock the mold cavity surface with the body of the mold. In heavy sections of a casting, chills may be needed to ensure directional solidification.

A single design that might be invariably followed in constructing a mold is not feasible, since the kind of pattern, and the material, size, and operating requirements of the castings, necessitate many variations. This chapter, therefore, is not designed to tell you to construct the ideal mold. Its purpose is rather to give you the general principles of mold design. As you gain knowledge and experience, you will learn how to adapt the mold to the type of metal involved, and to the shape and bulk of the particular casting.

TYPES OF MOLDS

Three distinct types of molds can be used in producing castings: green sand molds, dry sand molds, and skin-dried molds. They differ from one another mainly in the treatment given the mold before the molten metal is poured. A green sand mold is one that can be poured as soon as it has been rammed. A dry sand mold is one that is slowly baked in an oven before it is poured. A skin-dried mold is one that has been surface heated with a torch.

The green sand molds are usually employed for castings of light or medium weight, and the dry sand molds for heavy castings. Skin-dried molds are used when requirements call for a mold having the surface characteristics of a dry sand mold combined with the collapsibility of a green sand mold, or when an oven is not available for baking a dry sand mold.

When you use a skin-dried mold, you must have your melt ready to pour as soon as the mold is prepared. The effect of skin-drying will be impaired if the mold is allowed to stand, since moisture from the backing sand will penetrate to the mold cavity surface.

Dry sand molds have certain disadvantages. The rigidity of such molds resists metal contraction during the solidification of the casting, and this resistance is sometimes great enough to cause the casting to crack. On the whole, however, they provide the best type of mold for producing heavy castings which will be dependable under normal operating conditions. For example, the structure and the hard surface of a dry sand mold enable it to withstand the eroding tendencies of the force of the flowing metal, and to support the weight of large volumes of metal. The baking process eliminates moisture, and thus lessens the possibilities of formation of mold gas, and of rapid chilling of the metal.

Molds may be classified according to size: bench mold, floor mold, or pit mold. Bench molds are those small and light enough to be handled by one man; most of the molds required in Navy work will be of this type. A mold that is too large for one man to handle is usually constructed on the foundry floor. Pit molds are used when the size of the casting requires a mold constructed in a large pit in the foundry floor. A Navy Molder will rarely, if ever, have to construct a pit mold.

PARTS OF A MOLD

Construction details of a mold depend upon the size and shape of a casting, but there are certain component parts that are common to all molds. Obviously, there must be a cavity having the shape of the desired casting. Means must be provided for the entrance of molten metal. Provision must be made for ensuring proper solidification. Normally, then, all molds will have cope, drag, mold cavity, pouring basin, sprue, gate, riser, and vents. In addition, cores and various supporting devices may sometimes be required.

At this point, you may find it advisable to review the definitions in Appendix IV of this training course. Make sure that you can trace the path of the molten metal, as described in the following paragraph. Once you have familiarized yourself with the names of the mold parts, and with the way in which the molten metal is conveyed to the mold cavity, you will have the basic information necessary for understanding the discussion in this chapter.

The path of the molten metal is as follows: It is poured into a basin located in or on the top of the cope; from there it passes down a vertical sprue through the cope, and into a horizontal channel or gate that is cut in the parting plane of the drag and leads into the mold cavity. These basic elements are shown in figure 7-1. The riser and vents, also illustrated in the figure, are not a part of the design for conducting the molten metal from ladle to mold cavity. However, vents always are necessary to the casting process; and risers usually are.

MOLD CAVITY

For very simple castings, the molding cavity may be confined to the drag portion of the mold, but for most castings you will ram up your pattern so that the mold cavity is in both cope and drag, in relatively equal proportions. The procedures that you should follow in constructing the cavity either entirely in the drag, or partially in both cope and drag, are discussed in a later section of this chapter under "Molding Procedures."

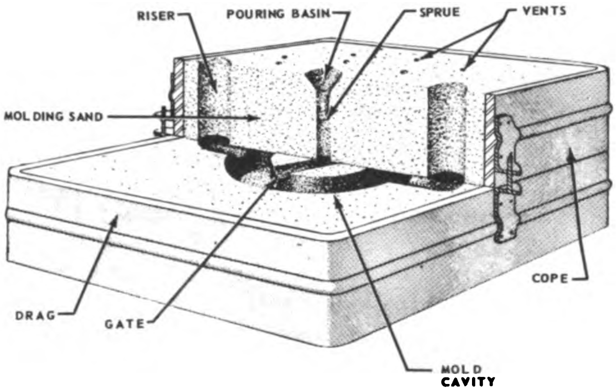

68.1

Figure 7-1.—Basic parts of a mold.

The fundamental requirement is that, after drawing the pattern, you have a cavity left that is essentially the size and shape of the casting to be made. Some possible variations in size may be indicated on the blueprints, but these tolerances will always be relatively minute. A variation in shape may be due to bosses that will be welded on later, rather than cast, or to the necessity of producing castings in sections which can be joined later.

Sprues, gates, and risers are rammed up at the same time as the pattern. After the pattern is withdrawn, the Molder can add any required finishing touches to sprues and gates. Such finishing touches would be slicking down the sand, and rounding off sharp edges.

POURING BASIN AND SPRUE

Several designs of pouring basin are satisfactory. A tapered, cone-shaped cavity can be formed directly over the sprue; this is probably the most commonly used design. However, the basin may also be bell-shaped, or it may be located alongside the sprue, with a dam or elevation between it and the sprue. Typical pouring basin designs are illustrated in figure 7-2.

If you are constructing a pouring basin of the type shown in part A of figure 7-2, have the diameter at the top of the cup about 2 1/2 or 3 times that of the sprue, and give the cup walls a steep angle. The depth of the cup should be slightly less than the diameter at the wide part. Thus, if you have made a sprue that is about 2

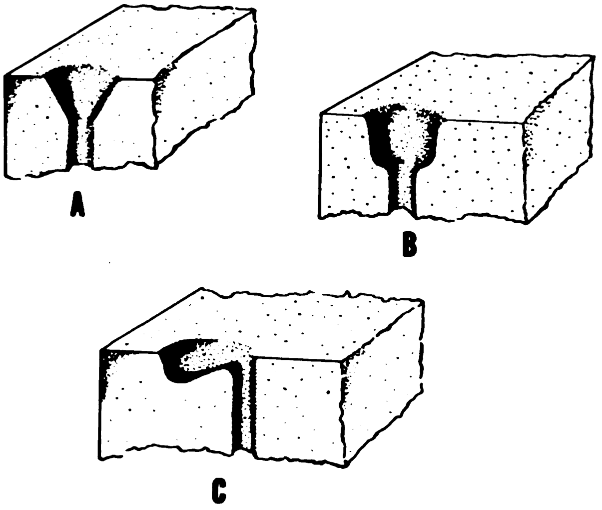

Figure 7-2.—Pouring basins. 68.2

inches in diameter, form the pouring basin so that it measures between 5 and 6 inches across the top, and has a depth of not more than 5 inches. This is the general type that you should use on molds for steel castings, with a sprue diameter of 2 inches or more.

The type of pouring basin illustrated in part B in figure 7-2 is also used for steel castings, but where the sprue is less than 2 inches in diameter. The diameter at the top of the basin should be about three times that of the sprue, and the depth of the basin should be slightly less than the diameter. The shape of this basin provides a larger metal capacity than does the cone-shaped type of similar dimensions; it enables you to pour the metal without splashing, and to keep the cup filled while the casting is poured.

The type of basin illustrated in part C of figure 7-2 utilizes the damlike entrance to the sprue to separate the slag from the molten metal. Like types A and B, this pouring basin must be wide enough and deep enough to prevent the splashing of metal during pouring.

For a casting other than steel, any of the above types of pouring basin may be used, but they should be made to slightly smaller dimensions. For any type of casting, however, the basin must be adequate for the sprue, and its capacity must be sufficient to permit pouring without splashing. The basin may be constructed either in the cope or as a separate structure on top of the cope, depending upon the amount of space that is available in the cope.

Unless the basin is kept filled during the pouring procedure, it will fail to serve its function of excluding slag and dirt from the mold. Since the slag and dirt rise to the top of the molten metal, your success in keeping it out of the mold cavity is better if you can fill the pouring basin before any metal runs through the sprue. A device for momentarily holding back the metal flow is the slag strainer stocked by the Navy. This comes in sheets of tin-plated steel, with minute perforations. The steel sheet can be readily cut to the size required to cover the runner or sprue hole. Inserted over the entrance to the sprue, this thin, perforated sheet delays the passage of the metal, and then melts after it has served this purpose.

GATING SYSTEM

The gate is an opening between the sprue (or runner) and the mold cavity, providing a channel for the molten metal. Actually, few molds are made with a single gate, since multiple gating ensures the rapid filling of the mold cavity and prevents the concentration of hot spots in the casting. However, when speaking of the gating system, the term "gate" is employed as a general term to indicate the entire assembly of connecting columns and channels carrying the molten metal from the top of the mold to that part forming the casting cavity proper. This term also applies to the pattern parts which form the passages, or the metal that fills them.

The means whereby the molten metal is introduced into the mold—and a knowledge of what happens when the molten metal follows a prescribed path as it enters the mold—are factors of primary importance in the production of a sound usable casting. The basic parts of a simple gating system are illustrated in figure 7-3; they play an important part in the directional and dimensional control of a casting. The design is based upon meeting the following three aims:

1. Filling of the mold.
2. The avoidance of any mold damage caused by the eroding action of the molten metal or alloy.
3. The establishment of the proper temperature gradients, so that the gating system is not responsible for shrinkage cavities in the casting.

To achieve these aims, the gating system must be designed to do the following:

1. Permit the complete filling of the mold cavity.

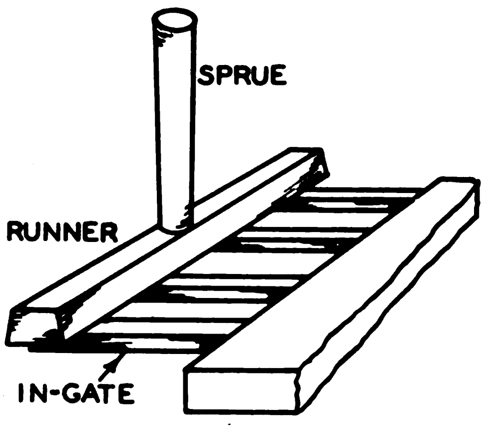

102.44
Figure 7-3.—Parts of a simple gating system.

2. Introduce the molten metal into the mold with as little turbulence as possible to eliminate any gas pickup and to prevent mold erosion.

3. Regulate the flow of metal into the mold cavity.

In any gating system, careful consideration should be given to the following:

1. The type of ladle and ladle equipment used.
2. The size, type, and the location of the sprue and runners.
3. The size, number, and location of the gates entering the mold cavity.
4. The rate of pouring.
5. The position of the mold during pouring.
6. Type of metal being poured.
7. The temperature and fluidity of the molten metal being poured.

When gates are improperly designed, they interfere with the directional solidification of the casting. To obtain the maximum efficiency from a gating system, it is suggested that you follow these basic gating design rules:

1. Use round sprues whenever possible.—A circular cross section has the maximum surface area for cooling and offers the least resistance to metal flow.

2. Taper the sprue.—The sprue should be tapered with the small end toward the casting; this helps to keep the downgate full of metal when pouring. At the point where the sprue connects with the gate, a shallow basin should be made. As the stream of molten metal descends, it will form a pool in this basin; such a pool acts as a shock absorber, and prevents the molten metal from eroding the molding sand.

3. Streamline the gating system.—Sudden changes in the direction of metal flow cause slower filling of the mold cavity, and such areas are more easily eroded, causing turbulence in the molten metal, resulting in gas pickup.

4. Use patterns for the gating system.—The gating system should be formed as part of the pattern equipment whenever possible. This permits the molding sand to be rammed harder and reduces sand erosion.

A gate must be small enough so that it is kept full of molten metal during pouring. In this way, floating sand or slag will be caught and held by the sand surface above the gate. If the gate is not kept full, the sand and slag may be carried into the casting cavity. The surfaces of a cut gate must be slicked down (pressed) to make firm the sand that was loosened by the gate cutter.

A gate must be large enough to admit a sufficient amount of molten metal to fill the mold cavity before the metal freezes and stops flowing. At the same time, the gate must not be too large, or else the area where it joins the casting (contact area) will be damaged when the gate is broken off.

Size, shape, and cross-sectional thickness of the casting help to determine the type of gate to be used. Thin castings are fed through wide, shallow gates that will allow the molten metal to run fast enough to form the casting properly, and yet leave the gate weak enough so that it may be broken off without breaking into the casting. All in-gates should be choked somewhat, that is, they should have a cross-section area slightly smaller than that of the casting. This reduction in size must not be so pronounced, however, as to produce a shower effect as the molten metal enters the mold cavity.

5. Maintain a proper gating ratio.—There is a definite relationship between the cross-sectional areas of the sprue, runner, and the in-gates. The rate of filling the mold cavity should not exceed the ability of the sprue to keep the entire gating system full of molten metal at all times. The cross section of the runner should be reduced in size as each gate is passed; this keeps the runner full of molten metal throughout its entire length and results in an even flow of metal through all of the in-gates. If this procedure is not followed in a multiple gating system, the molten metal will have a tendency to flow through the gates farthest away from the sprue. An example of the use of the gating ratio is illustrated in figure 7-4.

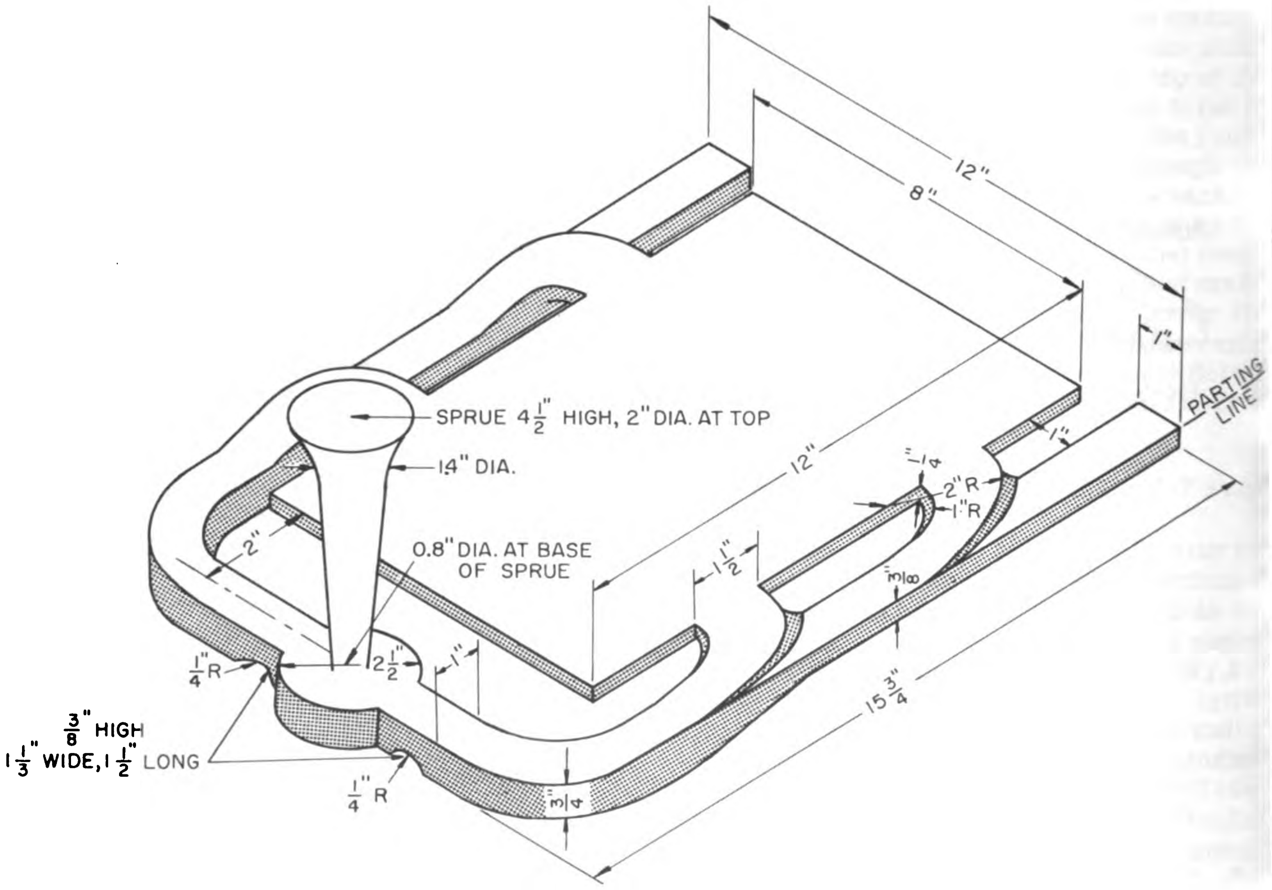

23.15

Figure 7-4.—Illustration of gating ratio for aluminum.

A gating ratio of 1:3:3 has proven satisfactory for an aluminum casting of the shape and size illustrated. The first number of the ratio refers to the cross-sectional area of the sprue base, the second number refers to the total cross section of all the runners from that sprue, and the third number refers to the total cross-sectional areas of the in-gates. In other words, the area of the sprue base is 1/3 that of the total area of the runner, and the total cross-sectional area of the runners equals the total cross-sectional area of the in-gates.

6. Maintain small in-gate contact.—The area of contact between the in-gate and the casting should be as small as possible unless gating is done through side risers.

7. Utilize natural channels.—In-gates should be so placed that the incoming flow of molten metal takes place along any natural channel in the mold and does not strike directly on a mold surface or core surface.

8. Avoid excessive in-gate choking.—The in-gate should not be choked in the mold so that it causes the molten metal to enter the mold at such a high rate of speed that a jet action effect is produced. Besides the danger of excessive metal turbulence, the mold may not be able to withstand this force, resulting in sand erosion. However, choking of the in-gate to assist in gate removal is a proper procedure, if a number of in-gates are used to allow an adequate amount of molten metal to enter the mold without too great an increase in velocity. The edge of the gate at the mold cavity must be rounded off; if sharp edges are left, they will delay solidification in areas adjacent to them, and cause shrinkage cavities in the casting.

9. Use multiple in-gates.—Unless a casting is small and of simple design, several in-gates should be used to distribute the molten metal to the mold cavity, fill the mold rapidly, and reduce the danger of hot spots.

10. Provide gates that can be easily cut off.—Gates should be placed where they may be easily cut off and properly finished to the casting's contour. If any parts of the casting are thinner than others, it is advisable to place the gates at these points.

To better understand the methods used to accomplish the proper filling of the mold cavity with the least trouble from mold erosion and internal shrinkage cavities, study figures 7-5 and 7-6 which give the recommended gating nomenclature and the proportionate size of some of the more commonly used gating systems.

When planning the type gating system to be used for a given casting, it is necessary to apply the fundamentals previously mentioned, and select the number, type, size, shape, and location of gates best suited and most convenient to use in filling the mold cavity at the desired rate.

Gating from the top of the mold cavity leads to turbulence in the molten metal, and is likely to cause erosion of the molding sand. In spite of these disadvantages, top gating will continue to be used, especially where the metal drop is slight, because it ensures a favorable "temperature gradient." This term means, in everyday language, that the hottest metal will always be in the riser, and the coolest metal will be in the bottom of the mold.

Gating from the bottom of the mold cavity cuts down turbulence and erosion, and is a practical aid to the production of clean castings. Here, however, the temperature gradient is unfavorable, with the hottest metal at the bottom of the mold, and the coolest in the riser. Such a situation generally results in improper feeding; this disadvantage can be offset to some extent by a fast pouring rate. The subject of top and bottom gating is discussed more fully later.

Another important factor to be considered is whether or not the finished casting must be clean. A certain amount of dirt will remain in the fluid metal, and you must depend upon your gating design to keep this out of the mold. If the gate is cut so that the metal has too much fall when it enters the mold, cutting of the sand will probably result. Keeping the gates full will help to screen out dirt, since the light weight of the dirt causes it to stay at the top of the metal. Gating from the bottom of the mold is also a method of keeping the casting clean. Remember that while some castings may be full of dirt holes and still usable, others will have to be scrapped if they are spotted with pinholes made by dirt in the metal.

Unless the type of gate that is used is capable of feeding the required amount of metal, there may be a malformation of the casting. To ensure proper feeding for the various sizes and shapes of castings, the foundry industry has developed a number of different designs for gating. The ML3 and ML2 should be familiar with parting line gating, top and bottom gating, and with such types as step and whirl gates. There are many variations of these basic types—for example, horn gates and pencil gates. As you progress to ML1 or MLC, you will appreciate that the diversity of gating designs enables you to meet the problems involved in practically any type of casting.

PARTING LINE GATES are easily constructed; in most cases, they are simply channels, between sprue and mold cavity, cut in the drag of the mold parting joint. It is preferable to have the gate enter directly into a riser, with the mold cavity being fed from the riser.

These gates produce a temperature gradient almost as good as the gradient obtained with top gating. There may be a problem of mold erosion, especially if the cope is deep, or if the metal drop from the gate to the bottom of the mold is considerable. If the tendency to erosion cannot be offset by correct sand practice and sand control, you will do better to use another type of gating.

BOTTOM GATING is especially good when you are working with bronzes or with alloys that have a tendency to drossing. This type of gating introduces the metal into the cavity with a minimum of turbulence. As mentioned before, it has the disadvantage of a less favorable temperature gradient than would be established with parting line or top gating. For large and deep castings, the metal can be run down to the gate by steps, to prevent washing in the runner.

Although bottom gating has a less favorable temperature gradient, the chief objection is the extra work involved in making the bottom gates, and in ensuring that there will be no cutting of the sand as the mold is poured. Commercial foundries meet this difficulty by using gate cores. These cores can be made in halves, and then jointed after baking. Figure 7-7 illustrates the use of such a core, to protect against sand in the mold being eroded by the fall of metal.

TOP GATING is suitable for shipboard use only if the mold is capable of withstanding erosion, and if the casting metal is nondrossing. This latter factor eliminates most nonferrous

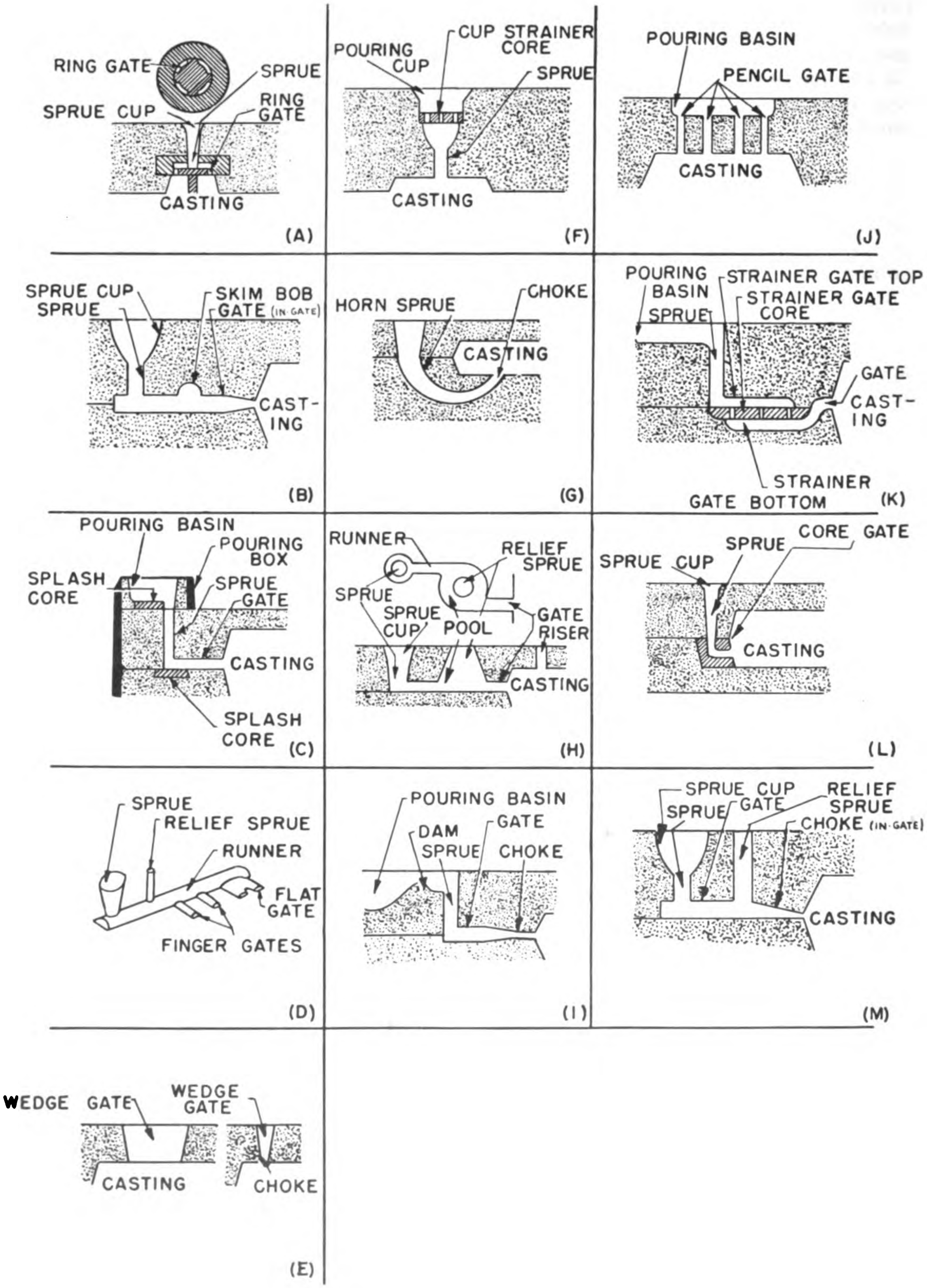

102.45

Figure 7-5.—Nomenclature recommended for various types of gating.

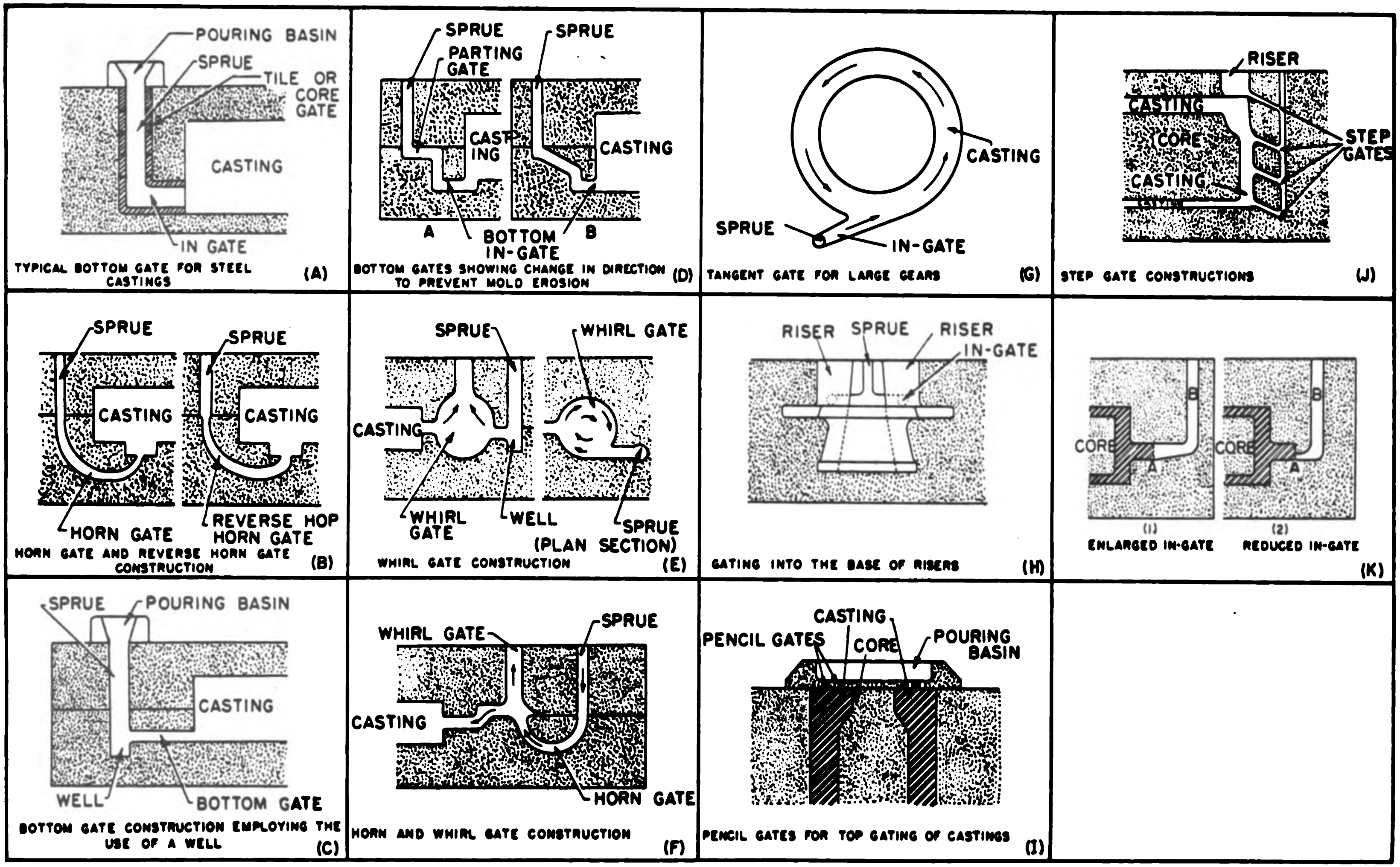

102.46

Figure 7-6.—Additional nomenclature recommended for various types of gating.

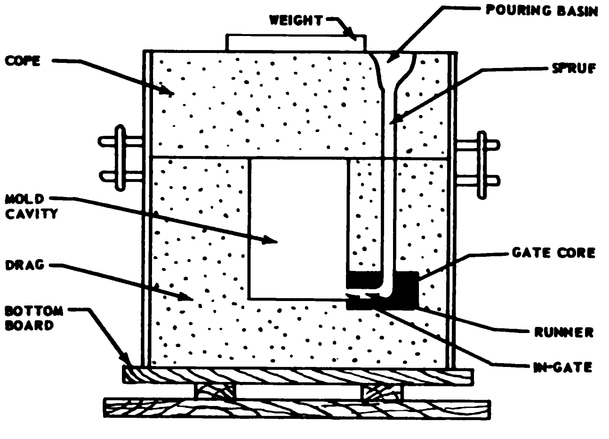

68.3

Figure 7-7.—Mold gated from bottom, with gate core used to prevent cutting.

castings, and the dross- or slag-forming aluminum and manganese bronze alloys. Ferrous castings of simple design, however, may be successfully produced with top gates. Splashing and mold erosion can be minimized by the use of pencil gates or perforated metal plates.

STEP GATES illustrate a type of combination gating system that includes the good features of both top and bottom gating. Each gate is constructed with an upward incline, as indicated in figure 7-8. The first metal in the mold enters through the bottom gate; as the cavity fills, a higher level gate becomes active.

With this system of progressive filling, you can obtain a quiet, nonerosive flow of metal, combined with the preferred temperature gradient. You can see, by studying figure 7-8, that the hottest metal will be in the riser, thus providing proper feeding after the pouring is completed.

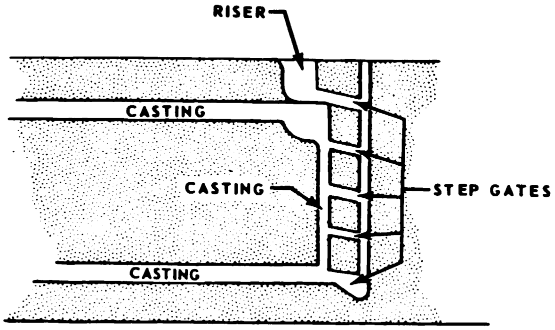

68.4

Figure 7-8.—Step gating.

WHIRL GATES combined with parting gates are a useful device for collecting and trapping dross, dirt, and eroded sand. To be effective, a whirl gate must be made with a diameter larger than that of the riser that feeds it, and the cross-sectional area of the sprue or runner entrance must be larger than that of the in-gate between the whirl gate and the casting. This construction develops a swirling action which washes dirt and sand on top of the metal stream into the riser. If the two in-gates were of equal cross-sectional area, the metal would flow through without any swirling action.

For gears, handwheels, and similar castings, have the in-gate between whirl and mold cavity enter the cavity at a tangent. This arrangement causes the molten metal to run in one direction, and prevents cold shuts that might be formed if the metal were to flow to several points in the mold at the same time.

A SKIMMING GATE is advisable in cases where dirt-free castings are required. The skimmer, illustrated in figure 7-9, is very much like a riser, but its primary function is to receive excess liquid metal rather than to feed it. However, channels are sometimes cut from riser to sprue, to accomplish the same purpose.

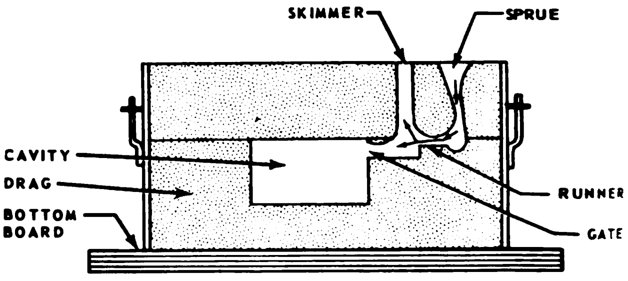

102.47

Figure 7-9.—Use of skimming gate.

A sprue and a skimming gate are set in the cope of the mold, and connected by a channel along the parting line between cope and drag. The gate feeds from the lower part of this channel; since the gate is approximately half as large as the channel, it takes only a portion of the fluid metal—and that the lower portion. The upper portion, upon which the dirt floats, is forced up into the skimmer by the pressure of the metal that is being constantly poured into the sprue.

Skimming gates are rarely used except where clean castings are definitely required, since the use of this type of gate demands more metal than would ordinarily be melted for a casting of the same specific size.

PENCIL GATES can be used when a relatively large volume of metal must be rapidly introduced into a thin casting. These gates have a circular cross section approximately 1/2 inch in diameter, and are usually employed in clusters. They are frequently incorporated into the gating systems for nonferrous castings.

The HORN GATE, which is just what the name suggests, is a common design for a bottom gate. If the small end of the horn is placed next to the mold cavity, you are apt to get a spraying effect as the metal is poured. If for some reason you cannot locate the horn gate with the large end against the mold cavity, you should at least enlarge the narrow end into a wide chamber so that it can better feed to the casting.

RISERING SYSTEM

Castings having a simple design may be produced by utilizing nothing more than the gating system. More often, though, the shape of the casting requires the use of risers incorporated in the gating system. To the layman who does not understand the process of solidification of metals or a riser's purpose and function in the mold design, its use is often thought to be a waste of time, effort, and metal. In fact, very few sound castings can be produced without the use of either an open riser or a blind riser to supply hot feed metal to the casting as it solidifies.

The principal reason for using a riser is to furnish molten metal to compensate for solidification shrinkage in the casting during the transformation from a liquid state to a solid state. In addition, a riser eliminates the hydraulic-ram effect (similar to the water "pound" when a valve is closed suddenly) when the mold is full, helps to flow off cold metal, and vents the mold. At the time the mold is completely filled with molten metal, there may be a sudden and large increase in pressure in the mold because of the motion of the flowing metal. This added pressure may be enough to cause a runout or may cause a deformed casting. A riser permits the molten metal to flow into the mold cavity evenly instead of coming to a sudden stop. Therefore, the riser reduces the pressure (hydraulic-ram effect) which may cause a deformed casting. When a casting is poured, the permeability of the sand may not be capable of permitting air and other mold gases to escape fast enough. A riser open to the atmosphere provides an easy escape for the produced gases. In addition, an open riser permits the Molder to see how rapidly the mold is being filled and provides a means of regulating the flow of molten metal.

During the casting process, the riser is a reservoir of molten metal attached to the casting from which the casting draws reserve metal during solidification to compensate for the internal shrinkage and contraction. If reservoirs of reserve molten metal are not available, voids or shrink cavities will develop within the casting. The use of risers to feed the casting during solidification is designed to prevent this type of shrinkage from developing. The mere provision of a riser, however, does not ensure a sound casting. To be effective, the riser's shape, size, and location must be such that it serves the sections needing additional metal during the final stages of solidification. Further, since the metal in the riser must be the last to solidify, the riser must be large enough so it serves as a reservoir of molten metal and remains liquid long enough for the casting to solidify. If the riser or any portion of the riser solidifies before the casting, the riser will draw metal from—instead of supplying metal to— the casting.

From the standpoint of solidification, the ideal shape for a riser would be that of a sphere because it has the smallest surface area for a given volume. A sphere, however, is impracticable because of molding difficulties that make it impossible to use as a riser. Therefore, the Molder will use the next best geometrical shape, which is a cylinder. (Blind risers make the closest approach to the ideal shape because they use a cylindrical body with a spherical dome.) The least desirable shape is a rectangle or a square because a large amount of surface area at the corners accelerates solidification. Molten metal in the corners of square or rectangular risers solidifies rapidly because of the large amount of surface area to which the molten metal is exposed. Figure 7-10 illustrates that square risers are only as effective as an inscribed circular riser would be. Notice that the metal in the corners of the square riser is wasted. There may be a time when it is necessary to modify the cylindrical shape of the riser at the contact point between the riser and the casting proper. However, this contact area should avoid square corners, and all portions above the neck of the riser should be cylindrical.

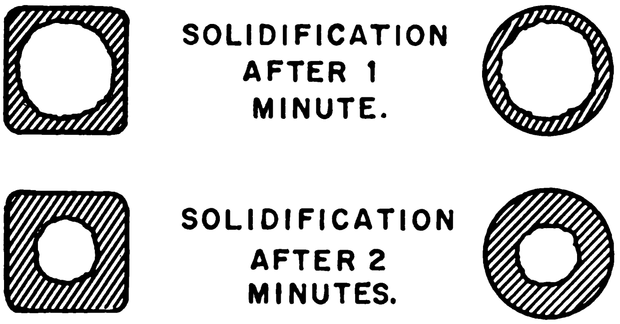

102.48
Figure 7-10.—Effectiveness of square and round risers.

In general, the riser should be located close to and above the particular part of the casting that (because of shape or cross-sectional thickness) requires special attention to feeding. The channel (in-gate) to the mold cavity must be large enough to maintain the feeding flow of molten metal for as long as it is needed. At the same time, it must be small as compared to the riser in order to be easily removed after solidification.

Since the principal function of a riser is to serve as a reservoir of molten feed metal for those portions of a casting that are the last to solidify, there is no set standard riser design a Molder can follow. The Molder will have to determine which sections of the casting will have to be fed by the risers and then design a riser that will supply these sections. It is important that the Molder know the metal or alloy that is to be used for the specific casting because solidification problems vary, depending upon the type of metal involved.

When you have studied the casting, and determined the location of the heavy sections that are to be fed by the risers, you could determine the required size of the riser by calculating the volume shrinkage that can be expected to occur in the section to be fed, and then selecting dimensions for that riser that would ensure the correct delivery of the necessary feed metal. This delivery of the required amount of feed metal to the casting is precisely the basic problem of the risering system. Several factors involved in this suggestion would only be estimates and the results would be subject to some degree of error. A simpler and more practical method of determining the riser's size is described in the following paragraphs.

The riser's size is determined by the secti
of the casting it feeds. The sections that requi
feeding are those adjacent areas having differe
cross-sectional thicknesses; for example, whe
the casting walls intersect in the form of a te
In determining the size of the riser, the fir
step is to scribe a full-sized cross-section
view of the section requiring the riser. (S
fig. 7-11.) Next, scribe the largest circ
possible within this area. (See circle A in eithe
part A or part B of fig. 7-11.) Measure the di
meter of the inscribed circle and multiply th
measurement by 1.5. The result is the diamete
of the riser contact area of a suitable riser f
the section of the casting under consideratio
The riser diameter should widen to a slightl
greater diameter above this point of contact a
shown in figure 7-11.

Having determined the riser diameter, th
next consideration is its height. Do not be misle
into thinking that adding extra height to the rise
will ensure added pressure (from the column
molten metal) that will keep the neck of the rise
open. Actually, the maximum effectiveness
any riser is obtained when its height is 1.
times its diameter. Any added height over th
1.5 diameter-to-height ratio is a waste of meta
Too short a riser is equally ineffective, since
will fail to provide sufficient metal to compensat
for casting shrinkage.

As illustrated in figure 7-11, risers must b
located so that they can directly serve the are
requiring extra metal during solidification.
the riser shown in part B of figure 7-11 wer
located on top of the flange instead of at its side
the large cross-sectional area at the tee woul
not be served adequately.

Two kinds of risers are employed in mol
construction: open risers and blind risers. Th
open riser cuts all the way through the cope hal
of the mold and is easier to construct than th

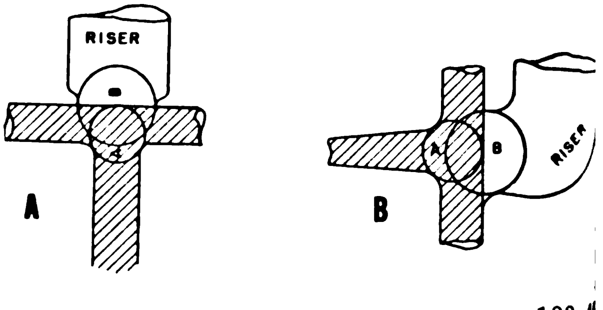

102.4
Figure 7-11.—Inscribed circle method for calculating riser size.

lind riser. Further, the open riser is open to ie atmosphere, and atmospheric pressure (14.7 si) on the surface of the metal in the riser perates to feed the casting effectively. In the pen riser, a great deal of heat is lost to the tmosphere through radiation. The blind riser oes not cut through the cope of the mold, and s now difficult to construct. However, the riser roves more efficient in the delivery of feed etal to the casting. As an example of comparative effectiveness, laboratory experiments eveal that open risers do not deliver more than 0 percent of their volume to the casting; wheres, blind risers deliver as much as 40 percent.

The dome shape of the blind riser is a closer pproach to the ideal spherical shape, making the iser more effective as a reservoir of hot metal. ince the blind riser is surrounded by sand, it oes not lose heat through radiation to the atmoshere as does the open riser. It is apparent then, iat to meet a given need, the size of a blind iser may be somewhat smaller than that of an pen riser. This is a distinct advantage from the tandpoint of the total amount of metal needed to our a series of castings.

Blind risers operate in basically the same ianner as open risers except it is not necesary to place them above the casting in order o feed the casting. As in all risers, the molten ietal must be kept open to the atmosphere, in rder that atmospheric pressure may bear upon and properly feed the casting.

Before discussing the means used to keep the lind riser open to atmospheric pressure, an xplanation is needed of what effect this pressure as on the solidification of a casting.

Metals solidify as a continuously thickening nvelope or skin, and contract in volume upon eezing. Upon the contracting of the metal, a acuum will tend to form within the casting itself the molten metal in the casting system (castig, gates and risers) is not acted upon by atmosheric pressure. When the vacuum starts to rm, the atmospheric pressure of 14.7 psi may ollapse the casting walls if they are weak. tmospheric pressure may also penetrate at a ot spot in the casting where the solidified skin f metal is weak or thin.

The most successful method of introducing tmospheric pressure to the blind riser involves ie use of a vent core. (See fig. 7-12.) This ent core (generally made of a strongly oilbonded and) is used to break the skin in the riser and llow the atmospheric pressure to push the iquid metal into the mold cavity. (A vent core may also be called a fire-cracker or cracker core.) The vent core is permeable enough to allow the atmospheric pressure to enter and act upon the last molten metal in the riser, which is at the center of the riser. Metal does not solidify rapidly around the vent core because it is small and does not conduct heat to the molding sand very rapidly. The size of the vent core should be proportional to the diameter of the riser; a riser diameter up to 3 inches would require a vent core of 3/8 inch to 1/2 inch in diameter, a riser diameter from 3 inches to 6 inches would require a vent core of 5/8 inch to 3/4 inch in diameter, and a riser diameter from 6 inches to 10 inches would require a vent core of 7/8 inch to 1 inch in diameter.

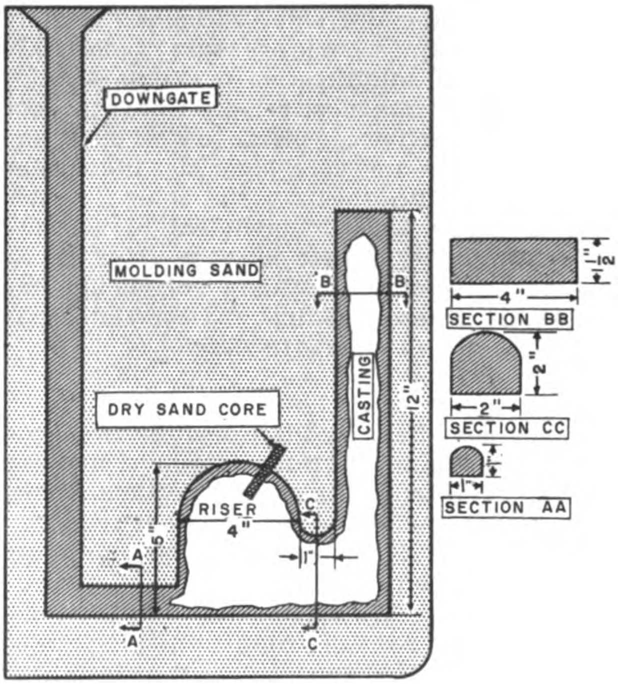

23.16

Figure 7-12.—Principle of a blind riser.

Referring to figure 7-12, the metal poured into the in-gate must flow first through the blind riser and then into the mold cavity. As soon as the mold is filled, the molten metal loses heat rapidly to the molding sand and an envelope or skin forms at the mold-metal face. As temperature drops in the mold, more and more of the metal solidifies.

The atmospheric pressure of 14.7 psi acts like a piston on the molten metal in the blind riser, forcing the metal into the casting to feed any shrinkage cavities. The shrinkage is constantly tending to create a vacuum in the casting while the atmospheric pressure is constantly relieving it. If solidification progresses properly, with the parts most remote from the riser freezing first and progressing toward the riser, each successive amount of shrinkage is compensated for by additional hot metal being forced in from the riser. Upon complete solidification of the casting, the in-gate into the riser, being smaller than the neck of the riser leading into the casting, freezes off first and completes this part of the closed risering system.

VENTS

Molds must be vented to expedite the escape of steam and gas generated within the mold as the sand is heated to a high temperature. These vents are made after the cope has been rammed and struck off, by forcing the vent wire down through the cope to the mold cavity.

Pressure of the molten metal against the mold sand forces the stream (from the moisture in the sand) to flow away from the casting, and deeper into the sand. As it reaches sand that is still cold, the steam condenses, and thus adds more moisture content to this portion of the mold. With the heat from the casting penetrating deeper into the mold, the moisture is driven farther away, until it is concentrated in a thin envelope of sand surrounding the casting.

Once this impermeable envelope forms, the steam is forced back into the still-liquid casting. These kickbacks of steam may carry some sand with them; the result will be that the casting will show blowholes and sandholes, or streaks of unsound metal.

Besides causing these defects in the castings, confined gases may build up pressure sufficient to blow some of the liquid metal out of the mold. Venting, therefore, is a very important factor in obtaining good castings. Locating the vents is also important; they must be within the impermeable envelope of sand, or else they will prove utterly useless in providing for the escape of gas.

MOLDING PROCEDURES

Thus far we have seen that sand molds are classified by (1) the sand practice employed—green, dry, or skin-dried and (2) the size of the mold constructed—bench, floor, or pit. A third method of classifying sand molds is based upon the basic design of the pattern, which in turn is determined by the shape of the casting. Mold classifications arising from the pattern shap and design are based on the parting line. A previously mentioned, several kinds of pattern may be constructed, depending upon the requirements of the part being produced. When classification is based on the parting line of th pattern, the Molder is concerned with three kind of patterns: (1) flat-back patterns, (2) straig split parted patterns, and (3) irregular partin plane patterns.

A flat-back pattern is one having the dra going in one direction from a flat portion whi may be formed on the joint or parting plane the cope and drag of the mold. The mold cavi formed by flat-back patterns is normally confined to the drag half of the mold. Obviousl only simple shapes may be produced with fla back patterns.

Straight split parted patterns have the dra going in opposite directions away from the joi or parting plane of the mold. The mold cavitie formed by straight parted patterns are not confined only to the drag half of the mold, but are in general, in both the cope and drag halves the mold in relatively equal proportions.

Irregular parting plane patterns are thos shapes which do not lend themselves to th formation of a straight parting line at the mo parting. Patterns of this type require a speci molding technique known as "coping out." this procedure the Molder cuts the irregul parting plane of the mold by hand rather th forming the parting by a straight (flat) moldi board as he does for straight parted pattern In certain cases, especially in repetitive wor a special molding board (follow board) is provided by the Patternmaker and used by th Molder to create the required parting plane fo the mold.

Although there are many variations to th techniques described in this chapter, nevertheless, the molding problems presented are typic of those which you, as a ML3 or ML2, are expected to handle. To be sure, there are mo complicated molding problems requiring solution in the Navy's foundries. You will no dou help other Molders solve problems and constru molds involving complicated cores; or you ma work with patterns having a number of loos pieces. Although these aspects of molding a not treated in this training course, the fundamentals presented herein will help you gain an understanding of the more complex molding problem Further, they will aid you in acquiring the bas knowledges and skills necessary to accomplis he more difficult molding problems. Master the imple techniques, and the more complex roblems will tend to take care of themselves. inally, put what you learn into practice.

The following paragraphs will illustrate and escribe the molding procedures used for a traight parted pattern with cut gates, a straight arted pattern with preformed gates and risers nd a set core, and an irregular parting plane attern made by the coping out method. In addiion, the forming of mold cavities with sweep atterns will be discussed.

TRAIGHT PARTED AND FLAT-BACK ATTERNS

Since straight parted and flat-back patterns re the patterns most commonly used, it is necesary only to describe the molding procedure for arted patterns and point out the difference etween flat-back and parted pattern molding. ee fig. 7-13.) Notice that the mold cavity in e mold shown in part A of figure 7-13 is cated entirely in the drag section of the mold; is is nearly always true in flat-back molding. n the other hand, the mold cavity of a mold ade with a parted pattern, as shown in part B f figure 7-13, is partially in the cope and artially in the drag. If the cope section of the old cavity of part B of figure 7-13 is ignored, is obvious that ramming the drag half of a arted pattern is no different than ramming the rag of a flat-back. The cope section of the mold ade from a flat-back pattern contains only ammed sand, except for the sprue and the isering system.

Bearing in mind the differences and simirities, we may proceed with the description f the molding procedure for a parted pattern. The first section of the description (and the illustrations shown in figs. 7-14, 7-15, and 7-16) applies equally to both straight parted patterns ~~and flat~~-back patterns.

Molding a Pattern Requiring Cut Gates

Select a flask of adequate length and width to accommodate the pattern. Make sure the depth is sufficient to allow space for sand above and below the casting; this will eliminate the danger of metal runout or mold strain. If the flask selected is an interchangeable flask, it doesn't matter which edge of the flask is placed down on the bottom board. However, if the flask has permanently attached pins, place the flask on the molding board with the pins pointing downward. After the drag section of the mold has been rammed, the flask pins will be in the proper position for aligning the cope and drag halves together. In either event, the mold board should have a smooth surface and it must be large enough to extend slightly beyond each edge of the flask.

Check the pattern to be sure it is in good condition. It should be clean, so that no sand will adhere to it when it is withdrawn from the mold. It should be shellacked or painted with the standard color code to prevent moisture absorption. All pattern parts must fit properly, otherwise the finished mold will not produce a casting of the required size and shape.

The part of the pattern that has the female dowel receptable in the face of the pattern parting is the part of the pattern that is placed on the molding board with the drag half of the flask placed over it. (See part A of fig. 7-14.) Coat the pattern lightly with parting compound (partine) and use the hand bellows to blow away

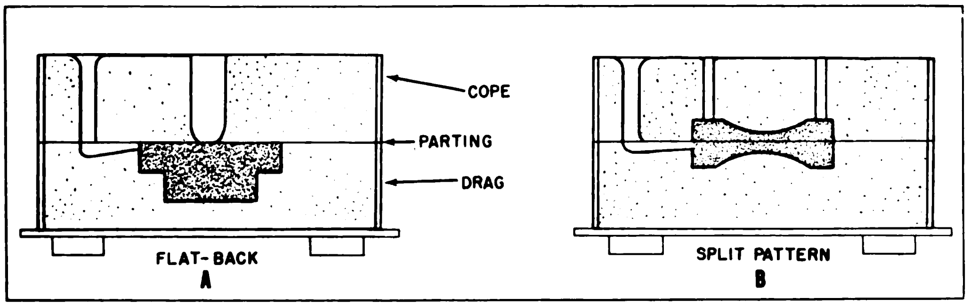

102.50

Figure 7-13.—Differences between molds made from flat-back and split straight-parted patterns.

any excess. (See part B of fig. 7-14.) Riddle facing sand over the pattern to a depth of about an inch (see parts C and D of fig. 7-14), and hand pack it around the pattern and in the corners of the flask.

The next step is to add backing sand to a depth of 3 or 4 inches, and ram it firmly. (See part A of fig. 7-15.) All-purpose (synthetic) sand may be rammed as hard as possible. If you are working with natural bonded sand, avoid hard ramming. Fill up the remainder of the drag half of the flask with heap sand, making sure there is enough for topping off. (See parts B and C of fig. 7-15.) Strike off the bottom of the drag with a straightedge or strike. (See part D of fig. 7-15.) Place a bottom board on the bottom of the drag half of the flask, making sure that it bears evenly and fully on the edges of the flask. (See part A of fig. 7-16.) A perforated metal bottom board is preferable, since it reduces the fire hazards when you are pouring molten metal.

Rolling the drag over is not a difficult operation. For a bench mold, it is possible to grip the bottom board, drag half of the flask, and the molding board with sufficient pressure to hold them in place as you roll the drag over. (See part B of fig. 7-16.) For a larger mold such as a floor mold, it would be safer to use clamps to

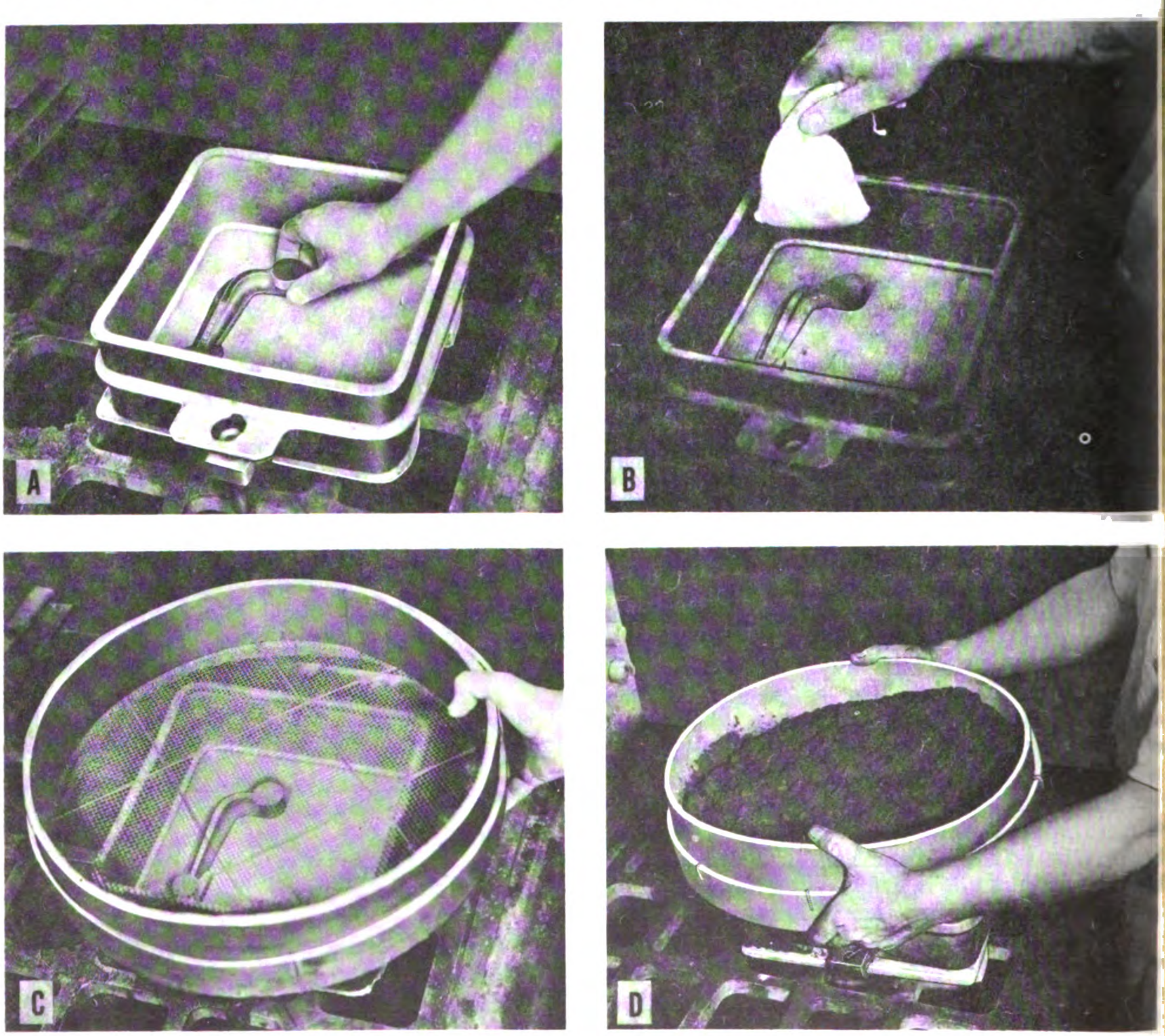

102.51

Figure 7-14. —Placing drag half of pattern and riddling sand into the flask.

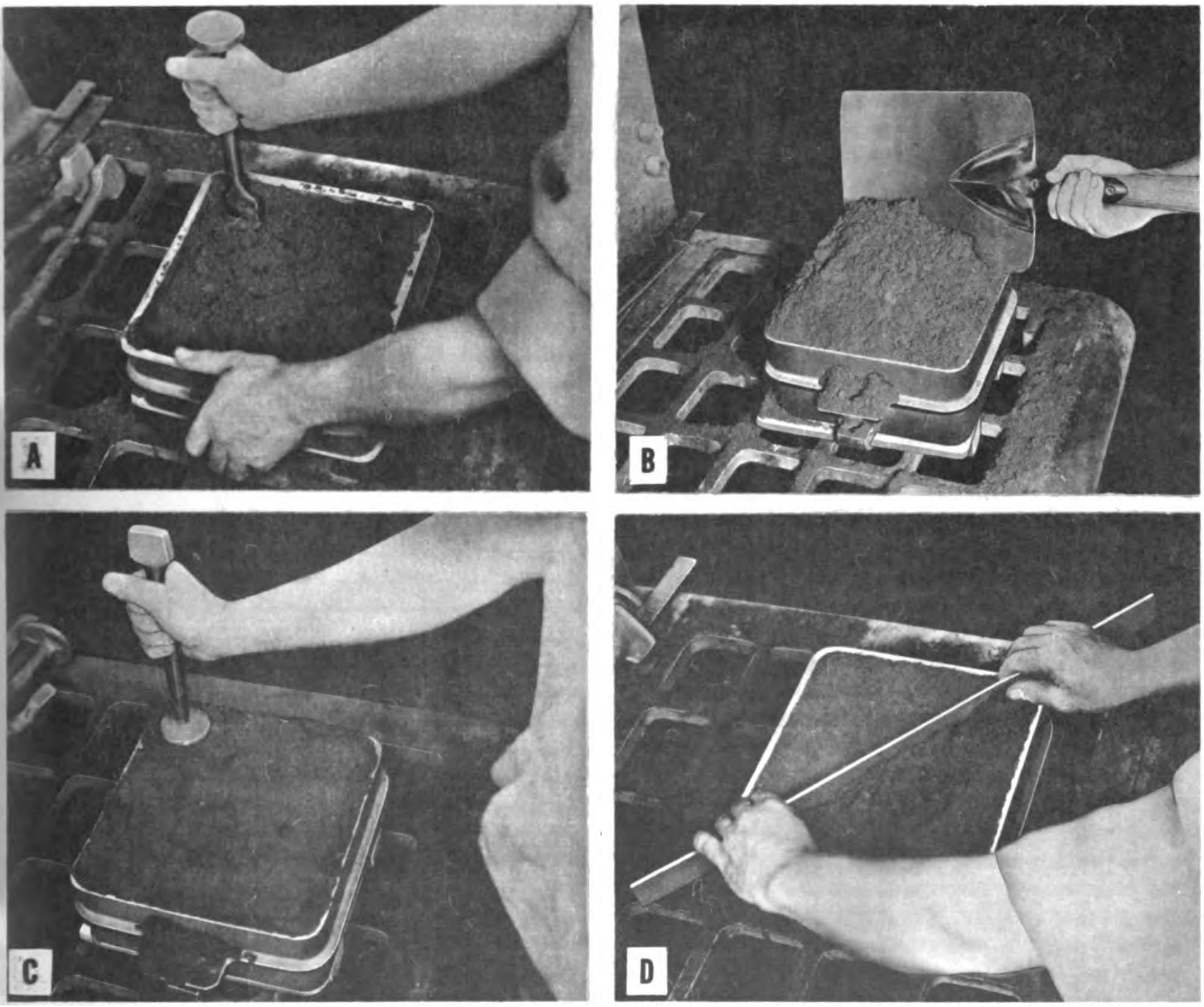

102.52

Figure 7-15.—Ramming the drag half of the mold.

hold these mold parts together, otherwise the movement of the drag will disturb the rammed sand. After rolling over the drag, remove the molding board (now on top—see part C of fig. 7-16) and clean and slick down the mold face (parting plane of the mold). This parting plane is very important; it is the parting of the mold. (See part D of fig. 7-16.)

At this point of the molding procedure, decide on the location of the sprue and risers. If the sprue or risers are to be formed by a tabular sprue cutter, a small depression is made in the face of the drag parting of the mold to mark the locations of the sprue and risers. If sprue and riser sticks are to be used to form the sprue and risers, nothing is done to the drag's parting face at this time.

Place the cope half of the pattern and the cope half of the flask in position as shown in parts A and B of figure 7-17. Here, is the only place where the molding procedure for a flat-back pattern differs from that of a straight parted pattern. With the flat-back pattern, the cope half of the pattern is nonexistent. Shake parting compound (partine) over the cope section of the pattern. (See part C of fig. 7-17.) The remainder of the operation is the same for both types of patterns.

Place riser and sprue sticks in position (see part D of fig. 7-17). Riddle and tuck the facing sand, as shown in part A of figure 7-18; then

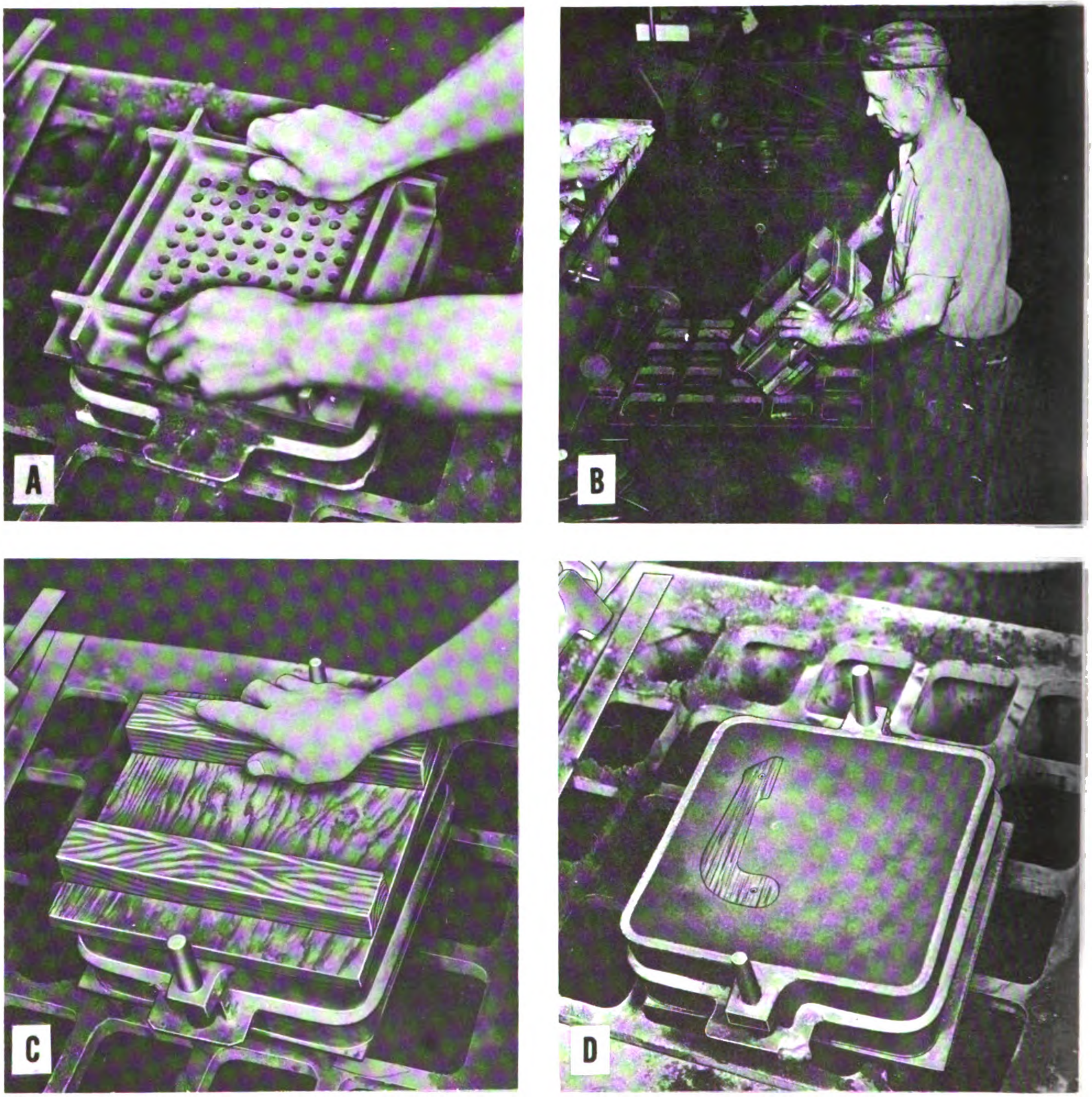

102.53

Figure 7-16.—Rolling the drag over.

fill the remainder of the cope with backing sand and ram firmly, as shown in part B of figure 7-18. Strike off the top surface of the cope of the mold and construct the pouring basin as shown in part C of figure 7-18. Gently rap the exposed portions of the sprue and riser sticks extending above the top surface of the cope and withdraw them from the mold. Clean and slick the top

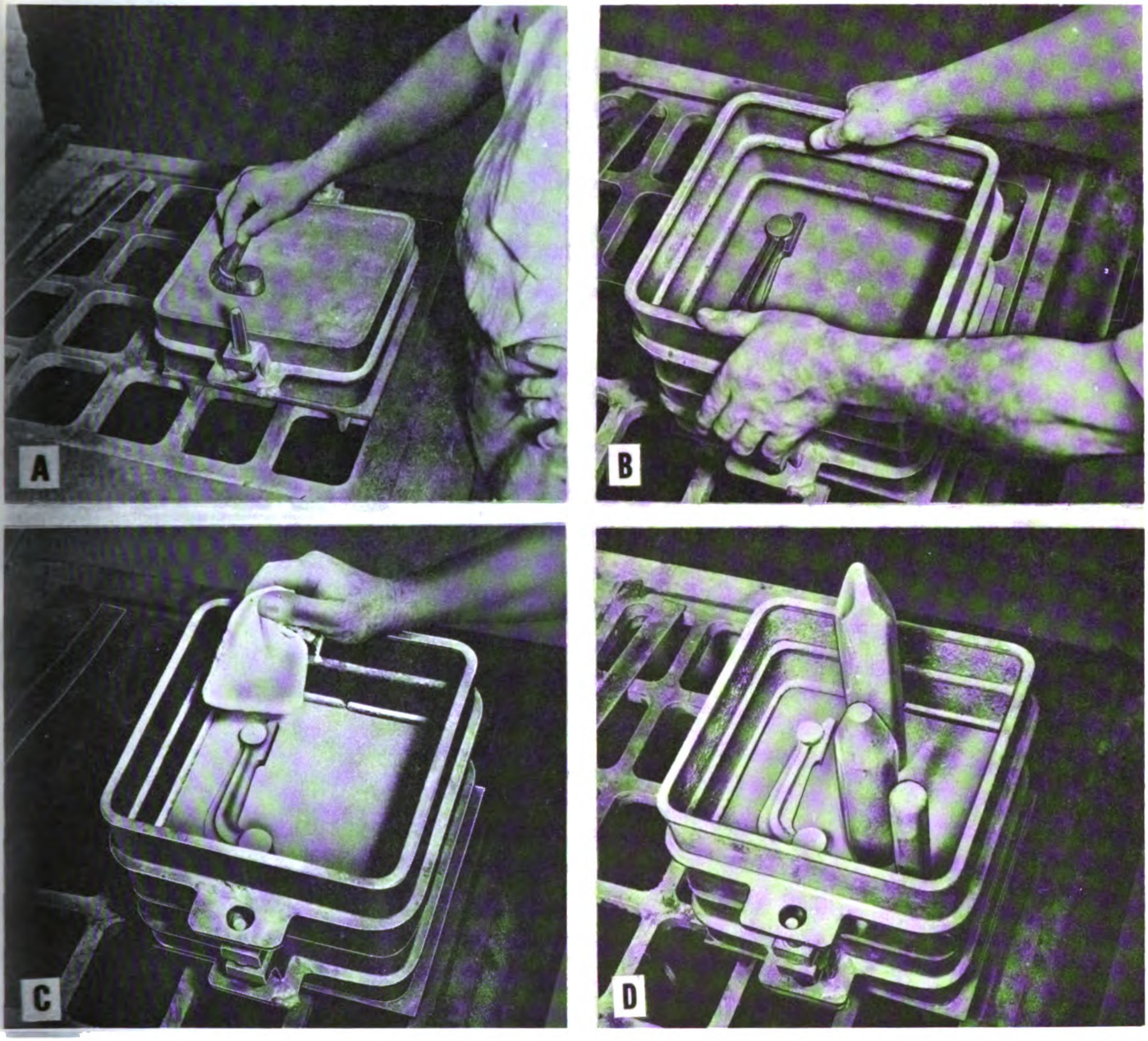

102.54

Figure 7-17.—Preparing the cope half for ramming.

surface of the cope as shown in figure 7-19. (Note how the sharp edges of both the sprue-pouring basin and the risers are rounded to eliminate any loose sand from falling into the completed mold.)

When ramming is complete and the sprue-pouring basin and risers have been withdrawn and the edges slicked down, the cope half of the mold is vented with a vent wire or rod. Before removing the cope half of the mold from the drag half, blacken the pouring basin with graphite.

The method used to open a mold depends on the size of the mold. Large floor molds may require the use of a hoist. In this example, the flask is small enough that you can lift the cope by hand. The cope is lifted off the drag, aided by the flask pins, and is placed on a backing board (second mold board) next to the drag with the parting of the mold up as shown in part A of figure 7-20.

Having opened the mold, remove any loose particles of sand from the mold joint with the

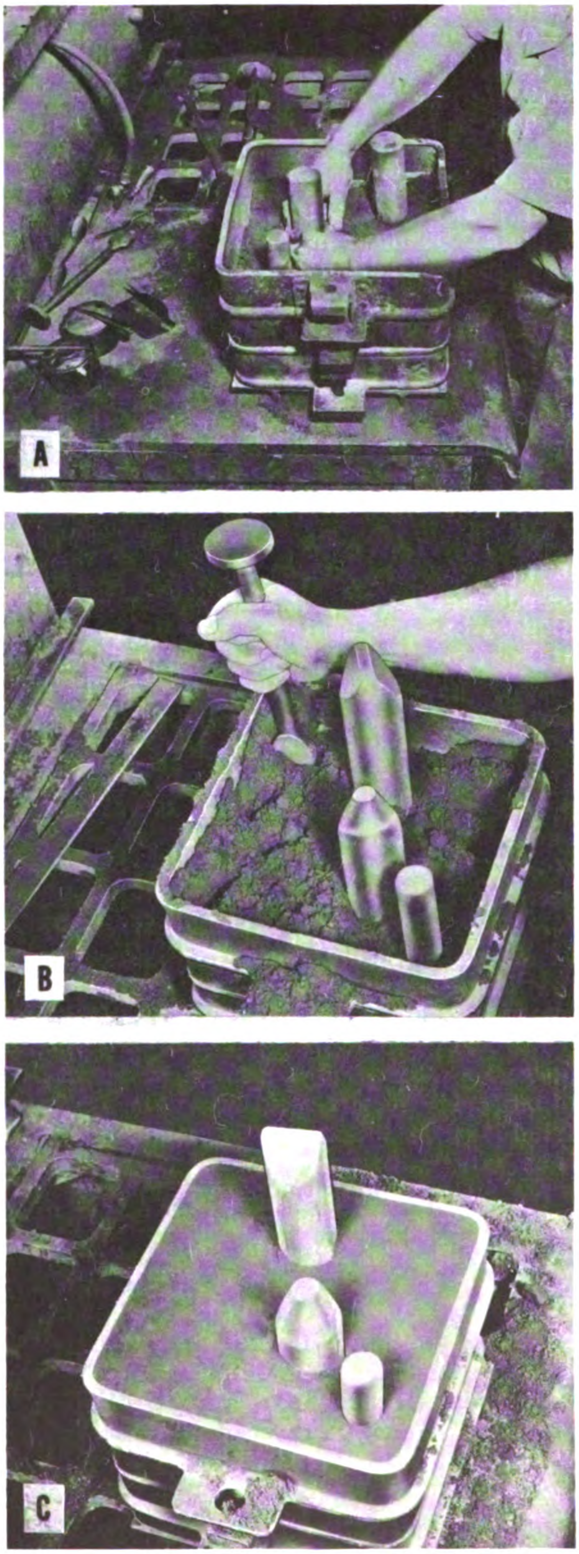

102.55
Figure 7-18.—Ramming the cope half of the mold.

102.56
Figure 7-19.—Finishing touches to the top of the cope half of the mold.

hand bellows. Then slightly moisten the sand around the pattern with a wet camel-hair brush or a wet bulb. Next, lightly tap a draw spike into the center of the pattern, gently rap the draw spike from side to side and front to back with a short length of metal rod. Continue rapping the draw spike until the pattern is loose enough in the molding sand to be withdrawn from the sand without breaking the mold surface. (Note, the pattern from the cope half of the mold and the pattern from the drag half of the mold should be withdrawn at the same time.)

Having withdrawn both halves of the pattern, cut in the gates between the sprue and riser, the riser and the mold cavity, and the mold cavity and the second riser as shown in part B of figure 7-20. In the mold shown in figure 7-20, the gate between the sprue and the riser is confined to the drag, while the in-gates between the mold cavity and the two risers are cut in both the cope and drag halves of the mold. The channel(s) thus formed with the gate cutter is smoothed down with the fingers, and any mold damage that occurs during the pattern withdrawal, or while you are cutting the gates, is carefully repaired.

To facilitate mold finishing, water is sprayed over the parting plane of the mold. However, if

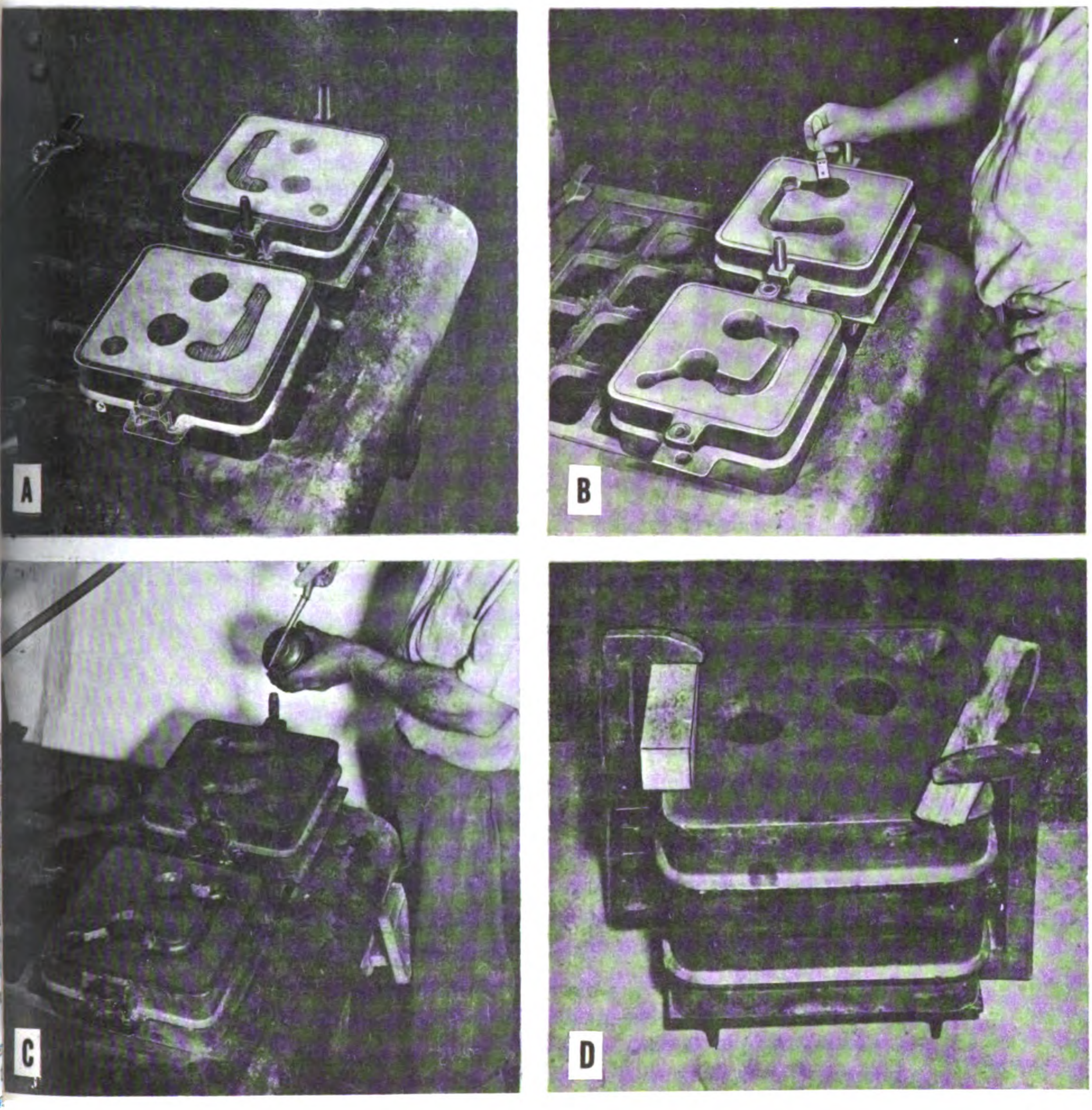

102.57

Figure 7-20.—Completing the mold interior.

he sand is properly prepared, the water spray is seldom necessary. Whether or not a water spray is used, the finishing operation of the mold must remove all loose sand, sharp corners, and any projecting fins. If allowed to remain, they will be sources of cracks, shrink cavities, and dirty castings.

Having finished tooling and slicking down the mold surfaces (gates, sprue button, and risers) dust or brush graphite, if required, over the tooled areas, as shown in part B of figure 7-20. Blow out the mold halves to remove the excess blackening and any loose sand that may be present. If a mold wash is required, it is applied at this time. Otherwise, the completed rammed mold is closed and prepared for pouring of the molten metal. However, if the mold is not to be poured immediately, it is sprayed with molasses water as shown in part C of figure 7-20. It must be remembered that whenever a molasses water spray is used, either as an aid in finishing or to prevent the drying out of the mold surface, the mold must be permitted to air-dry for a few hours before being poured. If the excess surface moisture added to the mold by spraying is not permitted to evaporate, gas (in the form of steam) will be generated in the mold during the pouring and cause porous and unsound castings.

The final step before pouring is the closing of the mold. Before closing, however, carefully inspect the mold's interior. Although it may seem elementary to the Molder, a point of utmost importance is this: MAKE CERTAIN THAT THE GATING SYSTEM AND THE RISERING HAS BEEN PROVIDED. At one time or another it has been the experience of almost every Molder to find upon pouring the casting or shaking out, that instead of a full casting he has only a sprue. By carefully inspecting the mold's interior prior to closing, this embarrassing molding experience can be avoided.

While closing the mold, the cope half must be carefully lowered and accurately guided into position. If the cope is out of alignment while being lowered over the drag, mold damage is likely to result. With the cope properly in position, inspect the parting of the mold to see that it is tight enough to prevent metal runout during the pouring of the casting. Then clamp and wedge the mold as shown in part D of figure 7-20 and the mold is ready for pouring of the molten metal.

Molding A Pattern With Preformed Gates

In the preceding section, a description was given on the procedure for molding a straight parted pattern. This section will illustrate the molding of a parted pattern with preformed gates, runner, and riser, and the setting of a core in the mold prior to the closing of the mold.

Select a flask of appropriate size so that sufficient room is allowed between the pattern and the flask for the riser and the gating system. Position the pattern, gate, runner, and the button of the riser on a smooth molding board as shown in figure 7-21. Notice that the molding board is of such size that it may be placed between the cope and drag halves of the flask. Facing sand is riddled over the pattern to a depth of about 1 inch. Riddling of the facing sand is absolutely necessary for good pattern reproduction in the molding sand. The riddled facing sand over the pattern and the gating system is tucked by hand into all pockets and sharp corners as well as being tucked around the pattern as shown in figure 7-22.

102.58

Figure 7-21. — Drag half of mold with pattern and gating system parts.

102.59

Figure 7-22.—Hand-packing riddled sand around the pattern.

Backing sand (heap sand) is then shoveled into the flask, covering the facing sand to a depth of 3 or 4 inches. The backing sand should be rammed into the deep pocket in the center of the pattern as shown in figure 7-23. The sand is then rammed firmly. (Use a pneumatic rammer if you are using synthetic sand or a hand rammer if you are using natural bonded sand because the

102.60
Figure 7-23.—Ramming the deep pocket of the pattern.

permeability of the sand is affected by the ramming. See chapter 6.) Care should be taken to avoid hitting—or coming too close to—the pattern with the rammer. The mold should be rammed uniformly hard in order to obtain a smooth, easily cleaned casting surface and to avoid any metal penetration into the sand, swelling, breakouts, or other casting defects. When the ramming is completed, more sand is added and rammed until the flask is filled to a point about 1 inch above the top of the flask.

The excess sand above the top of the flask is struck off by means of a straightedge or a strike as shown in figure 7-24. Instead of striking off the sand in one motion, it is easier to loosen the excess sand by a series of short strokes and then remove it in one motion. When the struck surface of the mold is smooth, scatter a small amount of loose sand over the surface to help give the contact area between the flask and the bottom board a better bearing for the mold proper. (Good, full, and solid contact between the bottom board and the drag half of the mold is very important if the mold is to have adequate support when the flask is rolled over.)

Place the bottom board on top of the rammed drag section of the mold. Clamp the bottom board, drag section of the flask, and the molding board together and roll the complete assembly over. The molding board is now on top. Remove the molding board and slick and clean the parting surface of the mold. Figure 7-25 shows the drag half of the mold rolled over, slicked down and ready for the cope halves of the flask and pattern.

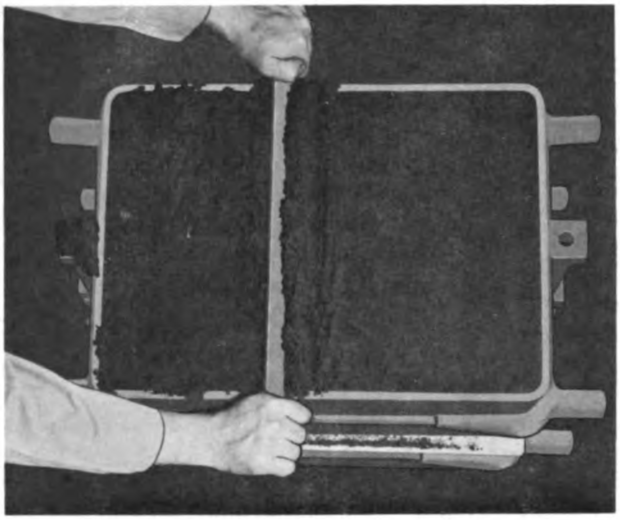

102.61
Figure 7-24.—Striking off the drag.

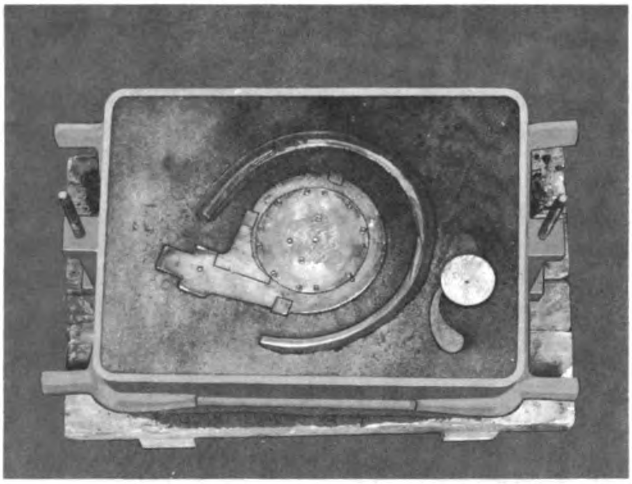

102.62
Figure 7-25.—Drag rolled over and ready for the cope.

Sprinkle parting compound (partine) over the parting surface of the mold. Blow the excess partine from the parting surface with the hand bellows. Set the cope half of the flask on the drag half of the flask, aligning them together with the aid of the flask pins. The cope halves of the pattern, gates, and the riser, and any other part of the gating system that is necessary are placed in position in their proper place. Figure 7-26 shows the cope half of the pattern, sprue, whirl gate, riser, and the crossgate set in position on the drag half of the mold.

102.63

Figure 7-26. —Cope half of pattern and gating pieces set on the drag half.

Riddle facing sand over the pattern, hand tuck the sand around the pattern, fill in with more sand, and ram the cope half of the mold as previously described for the drag half.

Figure 7-27 illustrates the hand ramming of the mold with the peen end of the rammer around the inside edge of the flask. This procedure should be followed for both the cope and the drag; it serves as a means of packing the molding sand tightly against the flask and prevents the sand from falling out of the flask during handling of the mold. Also note that the sprue and the riser forms (patterns) are slightly below the top edge of the flask. The cope is rammed in the same manner as the drag, with successive fillings and uniform ramming. The completed mold is then struck off. With the sprue and riser forms slightly below the top surface of the flask, the excess sand may be struck off without disturbing them.

After the completed mold is struck off, the cope half of the mold is vented with a vent wire as shown in figure 7-28. Slightly rap the sprue and riser patterns and withdraw them from the cope. After venting and the removal of the sprue and riser forms, the cope half of the mold is lifted off the drag, set on its side and a second molding board is placed on the top surface of the cope and rolled over to facilitate the withdrawing of the pattern. Withdraw the cope half of the pattern from the cope side of the mold.

Withdraw the drag half of the pattern from the drag side of the mold. (The cutting of the in-gates from the runner to the mold cavity is done before the withdrawing of the pattern whenever possible.) Note in figure 7-29, that the in-gates are cut before the pattern has been withdrawn from the sand. The withdrawing of the pattern halves from both the cope and the drag should be done with both hands, as shown in figure 7-30, to give better control over the pattern. Both halves of the mold are inspected, cleaned, and patched as necessary. Any slicking done to the mold should be held to a minimum; however, the sprue opening should be rounded and smoothed at the top surface of the mold to prevent any washing by the molten metal during pouring.

102.64

Figure 7-27. —Hand-ramming the partially filled cope.

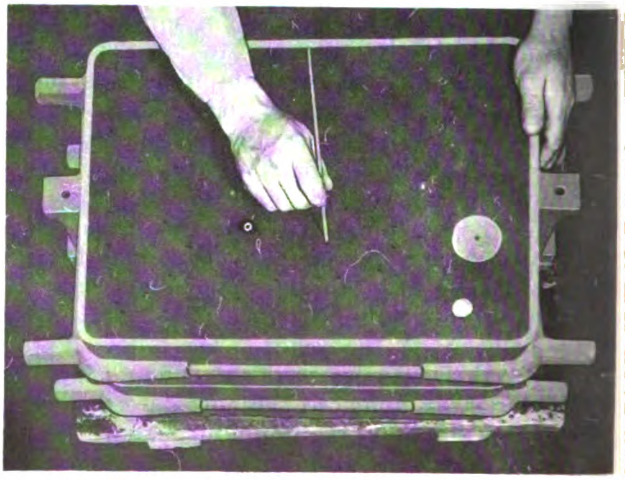

102.65

Figure 7-28. —Venting the cope.

102.66

Figure 7-29.—Drawing of the drag half of the pattern.

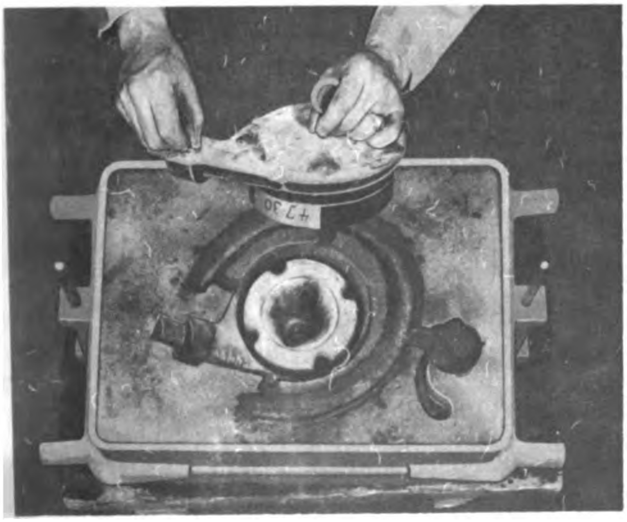

102.67

Figure 7-30.—Pattern withdrawn from the mold.

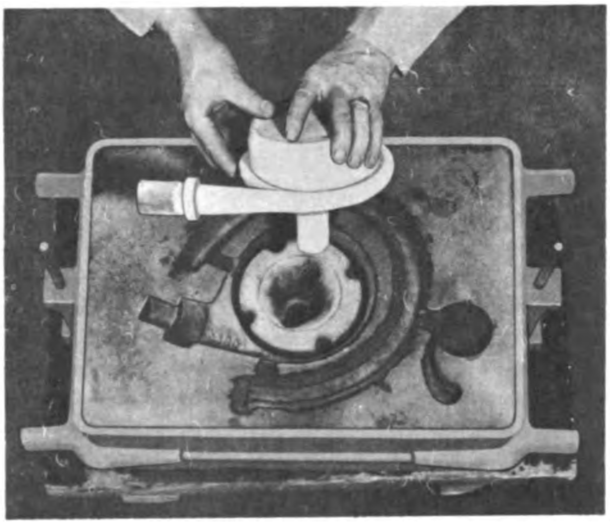

102.68

Figure 7-31.—Setting of the core in the drag half of the mold.

Once the cope and the drag halves of the mold are completed, the core is set in position in the drag half of the mold—with the aid of the core prints for alignment. Better control of the core during the setting of the core may be obtained by using two hands (and keeping the elbows close together) as shown in figure 7-31. The completed mold halves ready for closing are shown in figure 7-32.

The mold is closed carefully by using the flask pins as a guide to lower the cope half over the drag. The cope of the mold should be lowered slowly and must be kept level. Any binding of the cope half of the mold on the flask pins often causes the sand in the cope to drop out. After the mold is closed and clamped, the

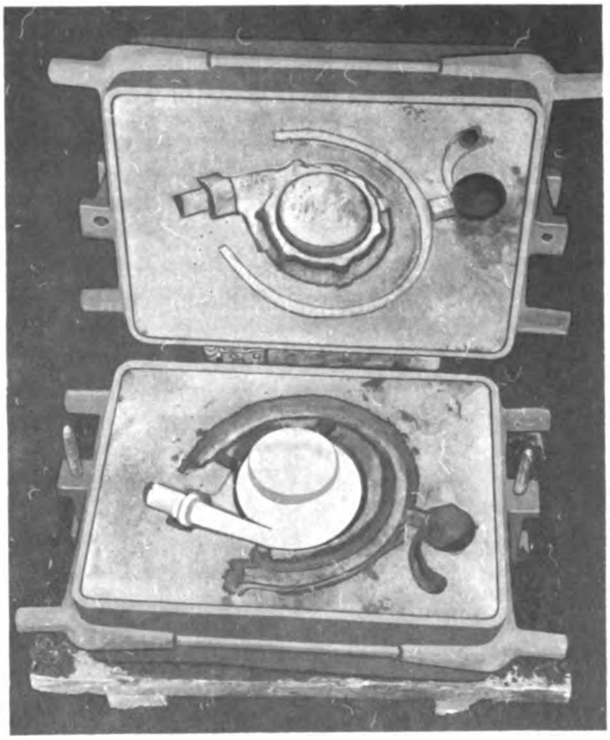

102.69

Figure 7-32.—Completed mold halves ready for closing.

mold weights are placed in position, and the pouring basin is positioned on the top of the sprue opening in the cope side of the mold, the mold is ready for pouring. (See fig. 7-33.)

IRREGULAR PARTING PLANE PATTERNS

Molds constructed with irregular parting plane patterns, require a somewhat different technique. Since they do not have a surface that can be formed by the mold's parting joint—as do flat-backs, for example—and since their design is such that a straight-parted pattern is impossible, the Molder must utilize a technique known as coping out. That is, the Molder must cut in the parting by hand instead of forming it with the mold board.

When molding with irregular patterns, the Molder's ability is definitely challenged. Each irregular pattern presents a problem that must be solved on its own merits. There is no standard solution. However, the problem presented by the boiler bracket—illustrated in part A of figure 7-34, and discussed in the following paragraphs—will acquaint you with the basic points to be considered when molding irregularly parted patterns.

The first point to be determined is the method of positioning the pattern so that it can be withdrawn from the mold. As you can readily see from the pictorial view in part A of figure 7-34, the boiler bracket pattern cannot be molded as either a flat-back or a split pattern. Neither is its shape such that a 90° vertical-lift draw can be made. How, then, is this molding problem solved? The solution to this and similar problems requires visualization. That is, the

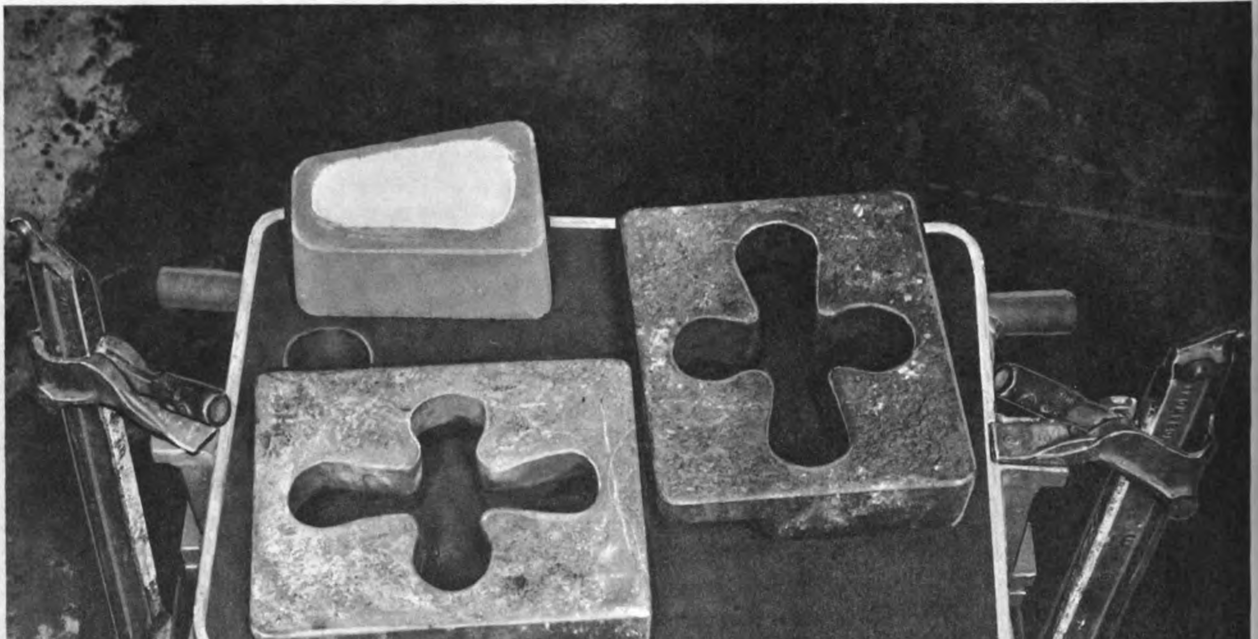

102.70

Figure 7-33. —The completed mold ready for pouring.

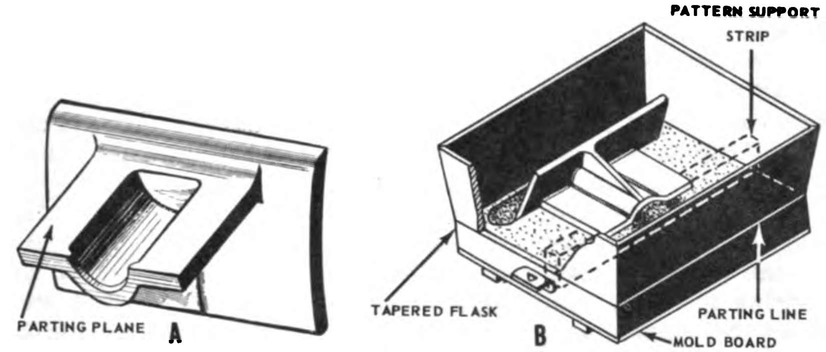

BRACKET LIP SELECTED AS PARTING PLANE

SUPPORTING LIP PARALLEL WITH MOLD BOARD

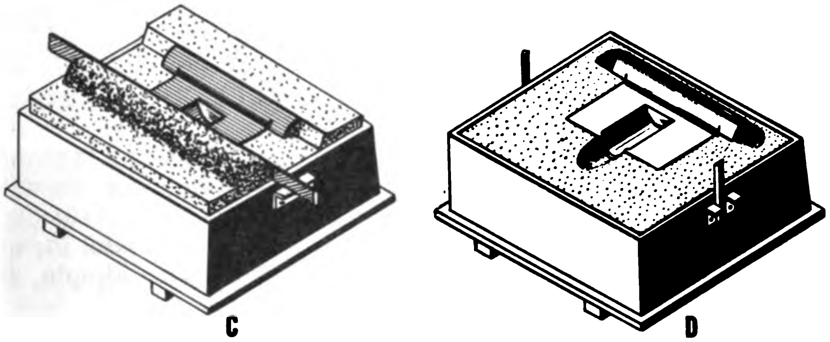

PARTING CUT DOWN OVER LIP

PATTERN IN DRAG, ILLUSTRATING IRREGULAR PARTING LINE

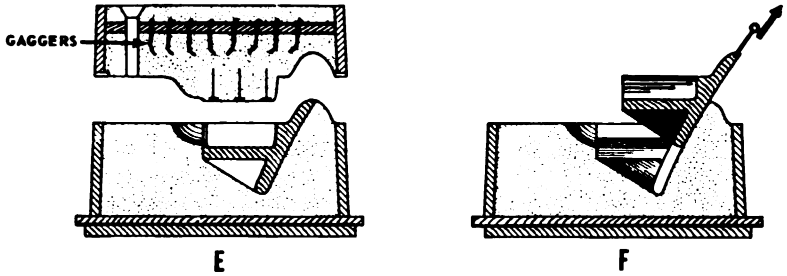

COPE SEPARATED FROM DRAG

PATTERN BEING DRAWN ALONG IRREGULAR PATH

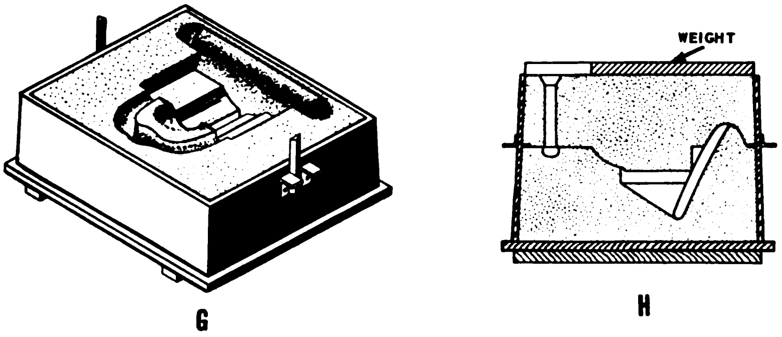

GATED MOLD CAVITY OF DRAG

MOLD READY TO BE POURED

102.71X

Figure 7-34.—Molding a pattern with an irregular parting line.

Molder must mentally revolve the pattern into several positions and, from this experience, choose the molding position most adaptable and practicable for the pattern.

In the problem under consideration, the flat surface of the bracket lip is the most suitable plane for the parting. To bring this surface into a position parallel with the mold board, a wooden support strip having the necessary dimensions is placed under the pattern's lip. (See part B of fig. 7-34.) Next, strips of wood having a thickness equal to that of the pattern support strip are placed under the flask to bring the lower edge of the flask into the same plane as that of the pattern parting line. It is obvious from this procedure that a portion of the pattern, and thus the mold cavity of the completed mold, will extend into the cope section of the mold.

Having positioned the pattern and flask, the procedure followed—riddling in facing sand, tucking, filling with backing sand, ramming, topping off, striking off, and rolling over— is similar to that described for molds constructed with flat-back and split patterns. After the drag has been rammed, rolled over, and the mold board removed, the technique employed is quite different from that described for split patterns. In the previous split-pattern molding problem, it was necessary only to clean and slick the exposed mold surface, attach the cope, and proceed. In our present problem, the parting plane must first be cut down by hand before proceeding with cleaning and slicking the drag's parting surface.

Coping out in this problem is accomplished by removing the flask support strips from the upper edges of the drag. Then, with the strike, cut down the parting over the lip as shown in part C of figure 7-34. Next, cut down the parting behind the cope portion of the pattern, forming a smooth rounded parting. Part D of figure 7-34 shows the parting surface of the drag completely tooled and slicked. Part E of figure 7-34 shows a cross-sectional view of this portion of the parting. All areas in which the parting surface changes direction are gently tapered. This is done to eliminate sharp directional changes in the parting plane. If the parting is formed with sharp corners, damage will probably result when the mold is opened and closed.

With the drag completed, attach the cope section of the flask, dust the exposed drag surfaces with parting material, and riddle in a layer of facing sand. Then finish ramming the cope in the conventional manner.

It is obvious from the pattern's position in the mold that its withdrawal, without disturbing the sand, is difficult. Since the back of the pattern is curved, the pattern must be withdrawn along the path of an arc having a radius the same as that of the pattern. This step is illustrated in part F of figure 7-34.

The pictorial view of the drag in part G of figure 7-34 shows how the mold is gated after pattern removal. Part H of figure 7-34 is a cross-sectional view of the mold after closing. The weight shown on the top of the mold is a device frequently used to aid the cope in resisting the upward push of the molten metal during the pouring procedure.

SWEEP PATTERNS

Sweep molding is a technique that may wholly or partially eliminate the need for a pattern in the production of certain classes of castings. The technique is useful for constructing molds for castings having simple, symmetrical cross sections.

Just what is a sweep? Simply, it is a board, one edge of which conforms in outline to the cross section of the desired casting. By moving the sweep evenly through a compact bed of sand, the Molder shapes the bed to the outline of the sweep.

The most common type of sweep, as illustrated in figure 7-35, is for a circular casting that is symmetrical about its center. The sweep (or strickle) is bolted to an upright spindle attached to the mold board. Turning the sweep on the spindle forms the heaped sand into the desired shape.

A cross-sectional view of the dome-like casting selected to illustrate the principle of sweep molding is shown in part A of figure 7-35. In this problem, a technique is utilized which sweeps the cope indirectly. But even so, two sweep boards must be made. The first step is to carefully calculate the inside and outside dimensions of the dome. (Actual dimensions would be obtained either from the blueprint or from the object itself if a broken part is furnished as a sample.) Do not forget to make the proper shrinkage allowance when you lay out the sweep boards.

One sweep board will have the form and dimensions of the outside of the casting; the other will have the form and dimensions of the inside of the casting. In part B of figure 7-35 the cope

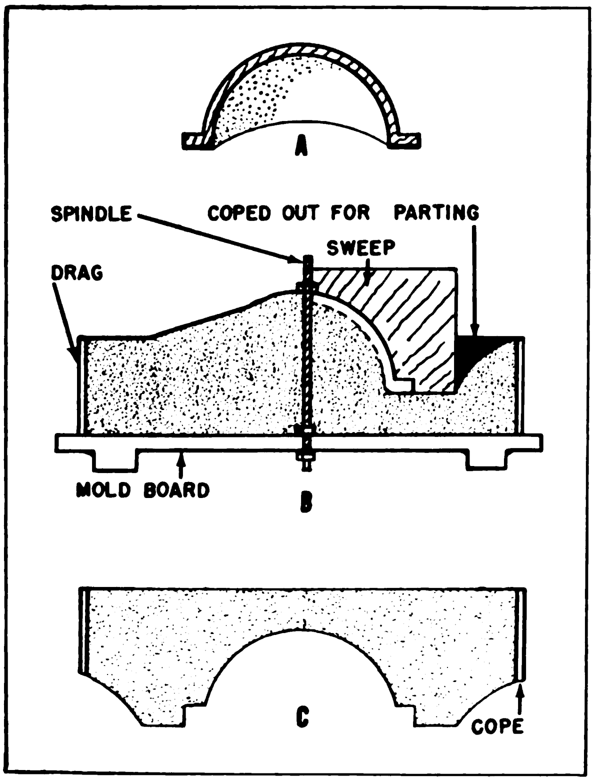

102.72
Figure 7-35.—Forming a mold with a sweep.

sweep's outline is represented by the solid line, while the drag sweep's inner edge is indicated by a dash line. Mark the sweep conforming to the shape of the casting's exterior surface "cope." Mark the other sweep "drag."

Having made the sweeps, bolt a suitable spindle to the mold board; attach the cope sweep to the spindle; place the drag portion of a flask on the mold board; and fill the flask with sand and pack it around the spindle. Then swing the sweep around the spindle, removing the excess sand as you proceed. The symmetrical mound thus formed has the same shape as the outside casting has and it will serve as the pattern for producing the cope. (See part C of fig. 7-35.)

Before setting the cope section of the flask in position, remove the cope sweep from the spindle and cut in the parting. The parting is formed by removing all sand lying in the triangular area between the bottom portion of the swept mold cavity and the upper edge of the drag flask. The sand removed for the parting is represented by the shaded area in the cross section of the drag shown in part B of figure 7-35. When all tooling is completed, blow out the drag, dust it with parting flour, attach the cope, and ram it up in the conventional manner. (In this problem, gaggers to provide support for the cope sand are essential.) The completed cope is shown in part C of figure 7-35.

After ramming the cope and removing it from the drag, attach the drag sweep to the spindle and cut the mound in the drag to conform to the inside dimensions of the casting. Sprues, gates, vents, and risers are to be provided during the course of the molding procedure.

SPECIAL MOLDING DEVICES

The Molder can make use of a number of special molding devices to aid him in the production of satisfactory castings. If he is working with a pattern that has a section(s) that has deep pockets that require an extra deep cope, there are ways in which he can reinforce the molding sand so that the mold will hold the shape required for the mold cavity. If the pattern is cored, there are devices for supporting the core(s) against the pressure of the molding sand and hydrostatic pressure of the molten metal. If some sections of the casting are of greater thickness than others, there are devices that can be used for accelerating solidification in those heavy sections. There are special devices which may be used to help mold certain sections if an old casting is to be used for a pattern. (For example, if the old casting has an irregular parting plane, with small but deep pockets, and one or more depressed areas in the casting that would interfere with the proper withdrawal from the mold, a drawback may be used.)

The following paragraphs describe the various means of reinforcing the cope half of the mold (crossbars, chucks, gaggers, nails, soldiers), providing extra core support (chaplets), accelerating solidification (chills), and providing aids in drawing deep pockets from depressed areas of a pattern or an old casting (drawbacks).

CROSSBARS AND CHUCKS

Reinforcement of the cope of the mold is often necessary because the mold is subjected to jarring when it is moved (to open or close the mold). A further need for reinforcing the cope arises from the tendency of the molten metal to lift, strain, or push up the cope. As stated in chapter 4, foundry flasks must be rigidly constructed either out of wood or metal.

Molding sand that is properly tempered will weigh from 100 pounds to 125 pounds per cubic foot (approximately .06 pounds per cubic inch) depending upon the percentage of moisture included for tempering. In bench molding the problem of sand dropout while the mold is being manipulated is not critical unless there are intricate contours or masses of sand projecting from the cope into the drag. (Sand in flasks up to 15 inches will generally support itself.) However, in floor molding, the mold is usually too large and too heavy for one man to handle because of the greater volume of molding sand that is rammed up. Some provision must be made in the flask to prevent the molding sand from falling out. This is accomplished by placing ribs (crossbars) between the sides of the cope and fastening them in position. At intervals between these crossbars, to keep the bars from springing sideways, are additional small crossbars known as chucks or jet bars; this forms, in effect, a series of small copes extending from one side of the flask to the other. (See fig. 7-36.) In order to tie all the small copes together and form one continuous surface over the casting, the molding sand must extend under the crossbars and chucks. However, the crossbars and chucks should not be as deep as the cope half of the flask. Should the pattern be of such shape that it is necessary for it to extend into the cope, a portion of the crossbars would be cut to allow a thickness of 3/4 inch to 1 inch of molding sand to come between the pattern and the bottom of the crossbars and the chucks. The edges of the bars and chucks are chamfered to a narrow edge at the bottom, so as to divide the sand near the parting plane of the mold into as

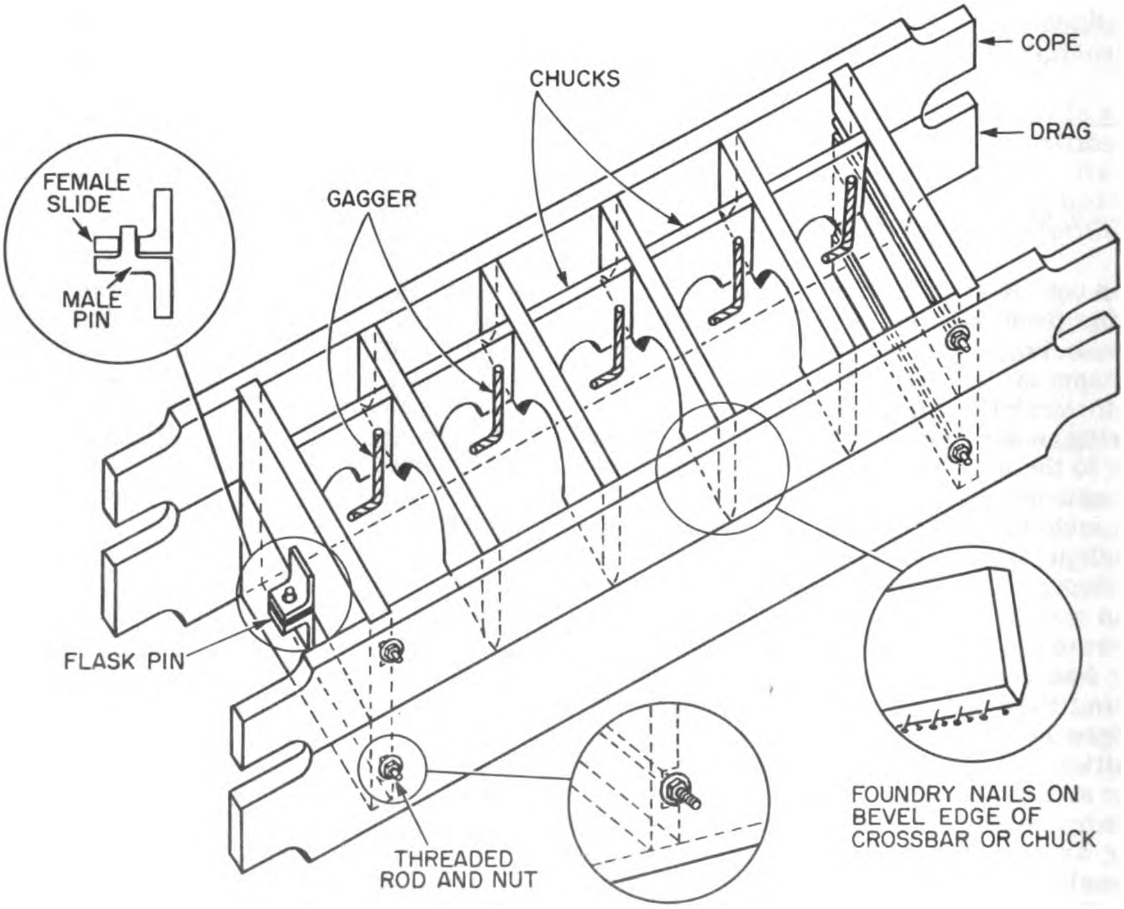

Figure 7-36. —Mold strengthening devices.

small an area as possible. As an added feature to assist the holding power of the crossbars and chucks, foundry nails may be driven into the chamfered edge. Large flasks are made with crossbars and/or chucks fastened in the cope half of the flask, conforming to the contour of the pattern for the purpose of giving additional strength and stability to the mold body and reducing to a minimum the number of gaggers required.

GAGGERS

Strengthening of the cope half of a large mold with crossbars and chucks is necessary for flasks over 15 inches. However, there may be times when having a complicated mold makes it necessary to use gaggers as additional support below the crossbars and chucks. (See fig. 7-36.)

Gaggers are L-shaped rods (in the form of a right angle) with a long leg (shank) from 4 inches to 20 inches long, and a short leg (toe) from 3 inches to 5 inches long. They are made of cast or wrought iron and serve the same function in molding that twisted steel rods serve in reinforcing concrete. A gagger made from smooth rod has a tendency to slide out of the sand if the free end (toe) is too long. A twisted rod will give a greater resistance and is capable of holding or lifting a greater weight for the same length of gagger.

Gaggers are used to give additional support to hanging masses of sand which would break or drop under their own weight. For maximum safety when gaggering up a cope, the free end of the gagger (that part of the gagger below the bottom edge of the crossbar or chuck) should be no more than 1/3 of the full length of the gagger. If the toe of the gagger is shorter than the recommended 1/3 length below the bottom of the crossbar, there is danger of the sand (as well as the gagger) dropping out when the cope is lifted off, rolled over, or closed over the drag. As stated before, molding sand will weigh 100 pounds to 125 pounds per cubic foot. A gagger will weigh approximately 4 1/2 times the weight of the molding sand. Therefore, a gagger not only must support the weight of the molding sand but also its own weight. A gagger of insufficient length will only add extra weight to the cope half of the mold instead of supporting the sand.

Before setting of any gagger, careful study of the pattern should be made to determine the size gagger required. Gaggers should be placed in the mold so they are not too close to a mold surface. At least a minimum of 1 1/2 inches of molding sand is necessary between the toe of the gagger and the pattern, depending upon the metal mass. If a gagger is placed too close to a mold surface, a chilling effect will result in portions of the casting, where it is not desirable. The best policy is to prevent this situation by careful placement and ramming of the gagger in the mold.

After the crossbars are positioned, parting material is applied, a layer of facing sand is riddled over the pattern and the parting plane of the drag, and the gaggers are set. Dip the toe of the gagger in a clay wash to provide a better bond with the sand, and press into the sand. The shank of the gagger should press firmly against the crossbar of the chuck; however, the gagger should not be placed straight up and down, but should be placed at a slight angle against the crossbar to prevent it slipping out of the sand. If two gaggers are long enough and they are crossed, there is less danger of their slipping out of the molding sand. Extra care should be exercised to avoid ramming the gaggers into contact with the mold cavity; if contact exists, difficulty will occur when the molten metal is poured because the metal will fuse to the gagger. Some Molders, upon discovering an exposed gagger after withdrawing the pattern, will knock the gagger back under the surface of the mold cavity—this will require additional patching of the mold. This procedure is NOT recommended because it definitely destroys the supporting value of the gagger. However, knocking back a gagger under the mold surface is far better than an exposed gagger, but you should never let the upper end of the shank project above the top surface of the mold. Ramming the remainder of the backing sand between the crossbar and chucks will hold the gaggers in position.

FACING NAILS

We have already seen that chucks and gaggers are employed to support the cope sand in all except the shallowest molds. Facing nails and rods are used in the same way, as added support at particular points where the sand might be disturbed. Small corners, where the molding sand might be broken, are reinforced with facing nails. Rods are used in similar spots, but where the pockets of sand are larger. (See fig. 7-36.)

CHAPLETS

When the design of a casting is such that an additional core support is needed beyond that given by the core prints, it may be necessary to use chaplets. Chaplets are metal supports used to hold a core in position in the mold, or to level parts of a mold, which are not self-supporting, in their proper position during the casting process. Chaplets are sometimes used to prevent a core from flexing when the usual reinforcement or rodding of the core is insufficient. In addition to the replacement of a chaplet beneath the core to support its weight and one on top to prevent the core from floating, chaplets may also be used on vertical surfaces to prevent side movement of the core.

Chaplets are far too often used to compensate for poor pattern and casting design, improper pattern construction, and bad core practice. In all castings, and particularly in pressure castings, chaplets are a continual source of trouble and their use should be avoided whenever possible. When chaplets are used, the pattern should be designed for local wall thickness so that the mass of metal is sufficient to fuse with the chaplet, otherwise a casting defect will result. Since the chaplet becomes a part of the casting itself (through the fusion of the surrounding metal in the mold cavity with the chaplet), a chaplet should be clean and its composition must be suitable for the metal from which the casting is poured.

In addition to having the proper composition, the size of the chaplet must be properly proportioned for the cross-sectional thickness of that part of the casting in which it is used. A chaplet made from the least amount of metal possible, but having sufficient strength to support the core, should be used. The strength of the chaplet must be enough to carry the weight of the core until a strong skin of metal has formed on the casting, but it should be no heavier than necessary. The use of oversize chaplets will result in poor fusion and may cause the casting to crack in those areas where the chaplets are located. Their proper selection and use requires a great deal of thought and consideration on the part of the Molder. However, using the correct size and shape chaplet is often the deciding factor in producing the difference between a sound casting and one that is "just fair," "all right," or "nearly perfect."

Chaplets are made of iron, mild steel, thin sheet metal (tin), brass, and aluminum. As a general rule, chaplets are made of a material similar in composition to the composition of the metal poured for the casting. Keeping in mind the fusion and melting points, you should use a material that has a melting point slightly lower than that of the casting.

It has been noted that molten metal will have a bubbling effect when poured against an unclean surface, such as a surface having rust and moisture. To eliminate this bubbling effect (pulling away) next to the chaplet and to prevent poor fusion—resulting in blowholes—chaplets are plated or tinned. Tinned chaplets are better because metal in the molten state has a greater tendency to lie quietly alongside a tinned surface. Therefore, for better fusion, chaplets should be perfectly clean, free of rust, and free of oil, grease, and moisture. Sandblasting the chaplet immediately before use is good foundry practice if no other protection for the chaplet is available.

The kind of metal used in the casting, the cross section or thickness of the metal through which the chaplet will pass, the force to which the chaplet is subjected (the weight of the core and the force of bouyancy), and whether or not the casting is subjected to liquid or gas pressures, all help determine the required size, weight, and design of the chaplet. The chaplet must fuse into the metal of the casting, therefore it must not be too heavy, or chilling and poor fusion will result. On the other hand, if the chaplet is too small or light, it might melt and fail to serve its purpose of holding the core in place until the metal has solidified sufficiently to take over the job of holding the core. Chaplets are sometimes knurled, or have sharp corners, or have perforations to aid and hasten the fusion.

To ensure the proper selection of a chaplet for a specific job requirement, a few practical rules should be followed:

1. Have the head large enough to support the weight of the core without crushing the sand.
2. Have the stem of the chaplet stiff enough so that it will not bend under the load of the core.
3. Choose a chaplet that will fuse well to the metal of the casting.
4. Tin the portions of the chaplet that will become embedded in the finished casting. Rusty chaplets may cause the molten metal to blow.

Chaplets are made in various sizes and shapes to meet the various needs of the foundry. (See fig. 7-37. Do not assume that the types shown are the only types of chaplets used in the foundry.) Each chaplet is designed for a specific job and may be made in various sizes, shapes, and variations.

DOUBLE END chaplets are designed with flanges calculated to distribute the weight of the core over a large area without sinking into the

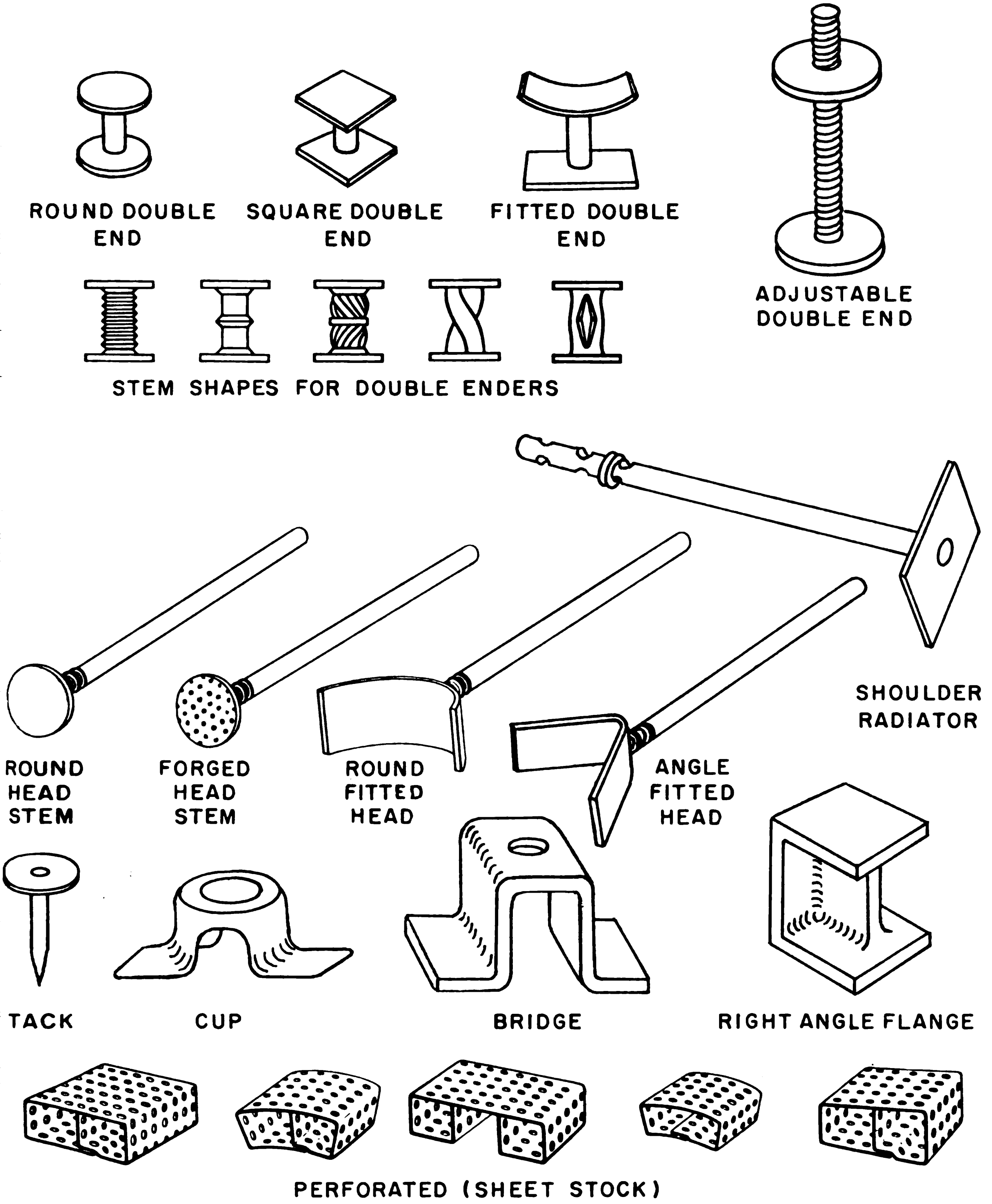

68.63

Figure 7-37.—Types of chaplets.

green sand. They are one of the most commonly used types. The stem between the flanges is distorted in some manner so it will make a better bond with the casting metal. The double end chaplets of the smaller sizes are called "motor chaplets." Notice the different shapes of these flanges, such as the round head, square head, and fitted head. The adjustable double end chaplet may be adjusted to the proper length required; then the excess length of the stem is cut off. Heads of the double flanged chaplets are sometimes made with small holes pierced in the flange to give the entrapped gas a chance to escape.

Some of the double end chaplets have one small flange and one large flange; when using this type of chaplet, place the small flange against the core and the large flange against the green sand or a chaplet seat. Chaplet seats are thin metal inserts used where necessary to increase the bearing surface of a chaplet. They are made either with or without a raised projection to enter a hole in the surface of the chaplet.

The double end chaplet is the type used for pressure castings having a wall thickness under 1 inch. Double end chaplets fuse very well to the casting metal and do not cause leaks.

STEM or single end chaplets are made in round smooth head, forged head, or fitted head types and are made with a distorted stem to help fuse them to the casting. The surface of the forged stem chaplet is made with knobs to improve the gripping power and prevent the core from moving sideways. When you are using a stem chaplet, the stem projects through the cope half of the mold. A strongback is clamped across the top surface of the cope in such a position that wedges may be forced between the stem of the chaplet and the strongback. The part of the stem of the chaplet that extends from the casting will be cut off during the cleaning process.

SHOULDER RADIATOR chaplets are basically like a stem chaplet but differ from other chaplets in that they are set before the pattern is rammed. The most common type of shoulder chaplet has a shoulder and break-off nicks. In using this type, the stem is dropped into a hole bored into the pattern as far as the shoulder. The pattern is rammed, then withdrawn, leaving the chaplet in place. The chaplet stem protrudes a distance equal to the thickness of the metal in the casting, and the core rests on the end of the chaplet. The shoulder has the advantage that it serves as a better gaging point than the bottom of a bored hole which may become partly filled with sand during ramming. The small nicks below the shoulder assist in improving the fusion of the chaplet and the casting metal. Shoulder chaplets produce a minimum of surface marks since the thin stem is the only part of the chaplet that will show. After the casting is made, a light blow with a hammer will break the stem of the chaplet at the break-off nick.

CUP, BRIDGE, and ANGLE chaplets are a variation of the double end chaplet. They have the advantage of fusing more readily since they do not have a center post which may act as a chill. In addition, they are much the strongest of all the chaplets and are capable of supporting heavy cores without buckling. The open design of the cup, bridge, or angle chaplet(s) permits the flow of molten metal through the chaplet, ensuring proper fusion. Metal bearing plates should be used with this type of chaplet because the bearing surface is small.

PERFORATED chaplets are used extensively for light castings. They come in sheet form, and may be cut and formed to the casting's requirements. The formed shape rests on the green sand and the area of support is increased as necessary to offer the required support for the core. Perforated chaplets are not as strong as some of the other shapes, but under certain circumstances, they can be used to carry the weight of the core safely to the green sand surface on which they lie.

TACKS may be used as a chaplet if they are of the proper composition; they are pushed through the drag half of the mold and driven into the bottom board. However, tacks should not be used for large cores or cores of intricate design since another type chaplet would be more useful.

CHILLS AND INSERTS

As metal passes from the liquid state to the solid state, the metal contracts (shrinks) to a degree which is constant for a given metal or alloy. This contraction or shrinkage is not a problem in small, simple castings which solidify almost as soon as the mold is poured. However, the metal in a heavy section of a large casting may remain in a liquid state for a considerable length of time. Using a chill on the heavy sections so that they will solidify as rapidly as the lighter sections of a casting is one method of counteracting shrinkage porosity.

A chill may be defined as any material that is placed in a mold to extract heat from the molten metal at an increased rate. Usually chills re metal devices (internal or external) used to ccelerate or direct solidification of the molten ietal in a definite direction in a heavy section f a casting. To perform its proper function, a hill must control the temperature gradients and qualize the periods of solidification in the cast- ig. However, the proper location of chills, to nsure the control of solidification, requires onsiderable knowledge and experience. There- ore, it is recommended that you as an ML3 or 1L2 take the advice of the higher rated men hen the use of chills is required on a casting.

Two kinds of chills may be used—internal and xternal. (See fig. 7-38.) Since the function of a hill is to conduct the heat away from the molten ietal more rapidly than sand would, chills must e made of metal or a material with good heat- onducting properties.

Internal chills must be of a material having ie same basic composition as the metal being oured for the casting since they become part of ie finished casting. External chills must be iade of a material that can be rammed up in the iold to form a part of the mold surface. Exter- al chills should be made of a material with a ielting point high enough to prevent the chill rom fusing to the casting. They can be recov- red and reused.

The size and shape of a chill is very impor- ant. If the chill is too small, it will not be apable of inducing solidification; if the chill is oo large, it will cause the casting to crack. The ace of the external chill must have the same ontour as that of the mold surface that it con- acts. Figure 7-39 illustrates the manner in hich external chills are rammed up in a mold o control the directional solidification of the nolten metal as well as giving the top surfaces f the bosses a hardened effect (chilled).

When chills are used, keep in mind the fol- owing rules:

1. Internal chills become part of the finished asting; therefore, they must be of the same omposition as the casting metal, and they must e free of all oxides, oil, or moisture.

2. The surface of external chills must be erfectly clean, and must be accurately fitted o the casting area that is to be chilled (see ig. 7-39).

3. The ends and the sides of all external hills should be tapered (see fig. 7-40). If they re left as thick as the section that is to be hilled, drastic cooling may take place along he edges, and the stresses which develop may ause cracks in the casting. Part A of figure 7-40 illustrates the incorrect method of positioning a chill in the mold. Note that the chill has the shape of a dovetail to hold it in the sand. This dovetail shape creates a hot spot at the junction of the chill and the casting surface. Part B of figure 7-40 illustrates the correct method of anchoring a chill. Note that the taper on the sides and the ends of the chill runs away from the casting—and if extended far enough, it would form

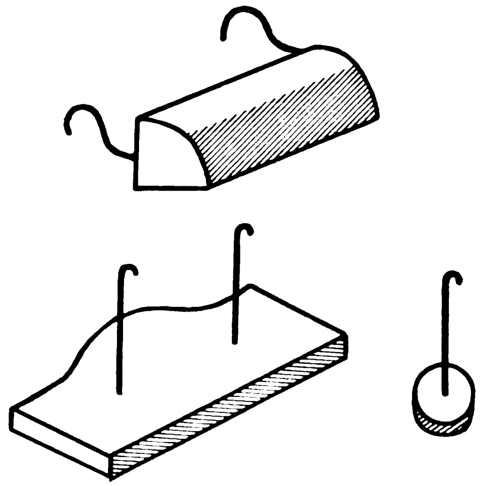

A EXTERNAL CHILLS

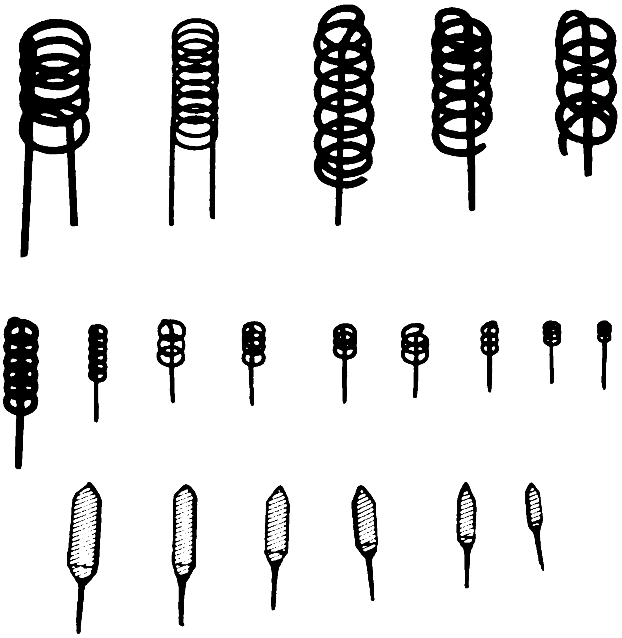

B INTERNAL CHILLS

23.18

Figure 7-38.—Types of chills.

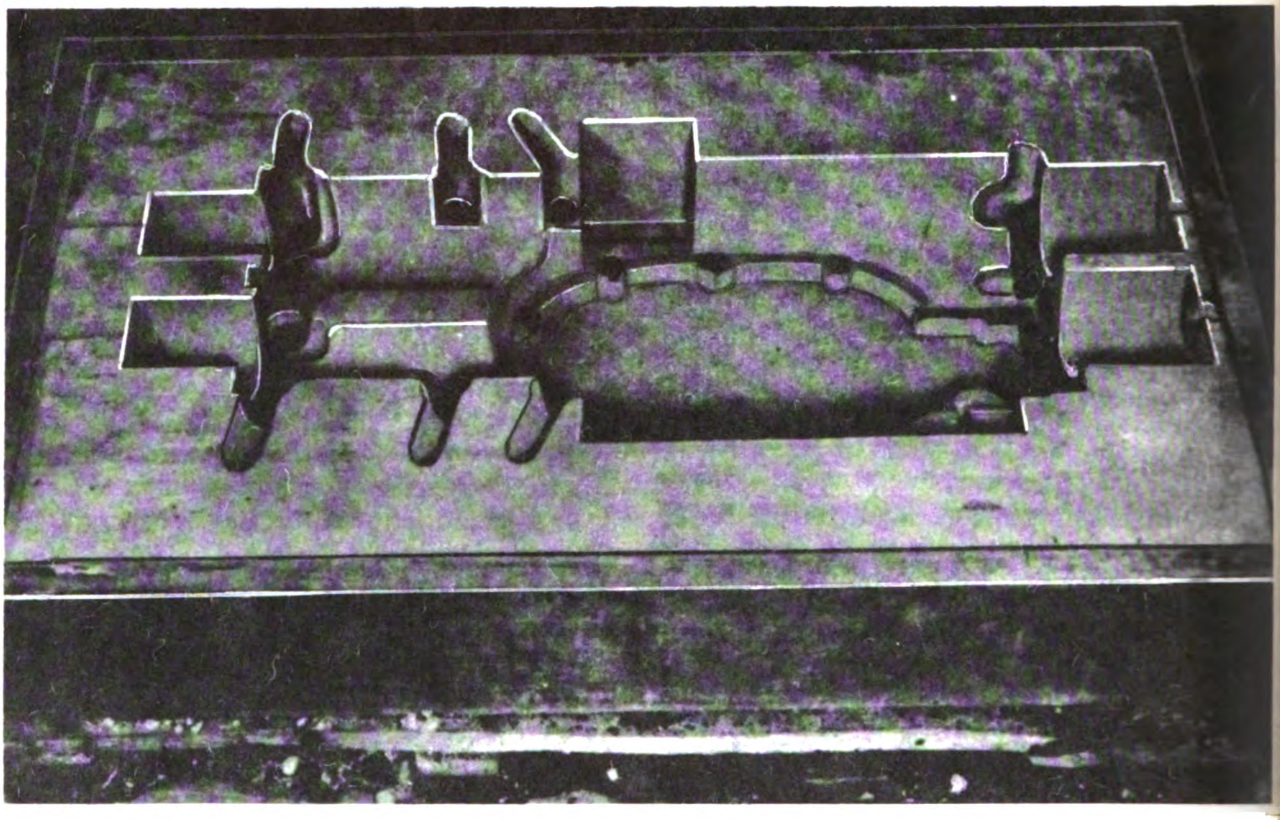

102.74

Figure 7-39.—Use of external chills in a large mold for an aluminum casting.

a cone or a pyramid. This shape eliminates the hot spot between the chill and the casting surface by allowing the heat of the molten metal to penetrate farther into the sand of the mold.

4. External chills must have sufficient mass to prevent their fusing with the casting metal; and at the same time, they must not be so massive as to unduly speed up the cooling process so that they cause cracking of the casting or interfere with the feeding of the casting.

The chill not only hastens solidification in the adjacent areas of the casting, but it also may cool the casting to such an extent that self-annealing of the chilled area is prevented upon cooling. As a result, the casting will harden at that point on the casting. However, sometimes hardness at the point of contact may be desirable, since it prevents wear; more often, hardness is undesirable, since hard spots in the casting so formed are not machinable by the usual machining methods.

The use of cast-in inserts to develop special characteristics which are desirable in a casting may be obtained by using metal inserts of a different material than the material of the main body of the casting. These inserts are frequently cast in place during the pouring of the mold. The use of these inserts is included in this section because of the close relationship between inserts and chills.

Frequently a steel or bronze bushing is cast into an aluminum pulley to give a special characteristic of lightness to the casting and a hard bearing surface for the shaft. Brake drums are another good example of the use of cast inserts. The outer shell is a steel stamping into which a liner of cast iron is poured. Steel or bronze shells for holding soft metal liners for bearings are the most common use of inserts that the Molder will be required to cast. Basically, all cast-in insert castings (composite castings) require a mechanical means of bonding one metal

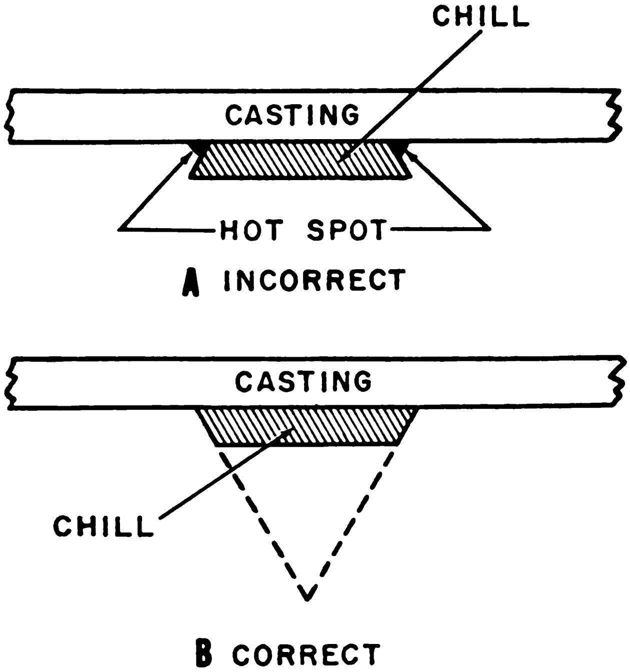

102.75
Figure 7-40.—Side and end shape of a chill.

to another. When using inserts, any design that uses anchors for bonding should be small and the anchors used sparingly. Simple anchors used for mechanical bonding are formed by drill points or by plain grooves. Although dovetail anchors are generally used, the T-head anchor has more holding power. The shrinkage of the neck of the T-shaped anchor holds the metal faces together. As an extra aid in bonding steel to brass or bronze, the insert may be copper plated.

Any insert used for a wearing surface on a casting will act as a chill to the main body of the casting and should be designed accordingly. The insert is designed, semi-machined, and used when the pattern and the insert are rammed up in the mold. The pattern is withdrawn from the mold, leaving the metal insert in the proper position in the mold cavity in the same manner as an external chill. An insert placed in the mold cavity should be as clean as possible to eliminate any oxidation between the two different metals.

Another style of insert is the sheet metal form; such inserts are used primarily for casting transverse holes in castings. Sheet metal forms were developed for casting holes for hinge pins on stove or furnace frames. These forms were so successful that their use has been adapted to other types of castings where holes must be produced crossways above or below the parting line.

Inserts can be used to form a hole or recess (in a casting) with sharp corners, smoother surfaces, and greater accuracy than can be obtained with green sand. An insert may be designed, manufactured, and used on the principle of a ram-up core. However, before the insert is rammed up in the mold, the hole through the insert must be rammed with molding sand. The rammed sand in the hole of the insert will help to distribute the heat away from the insert and to the sand of the mold. In addition, the molding sand will keep the thin wall of the insert from collapsing during the pouring and the solidification of the main body of the casting.

The insert (being protected on one side by sand) does not melt but welds (fuses) itself to the casting, forming a perfect union between the insert and the casting. However, when using an insert of this type, remember that the sheet metal form acts as a chill and should be treated as such.

After shaking out, the casting will have the insert bonded to the casting in the proper position. The sand that was rammed in the hole of the sheet metal insert will fall out, leaving a clean hole of the required shape and size for the design. For further information on cast metal inserts, consult the Patternmaker.

DRAWBACKS

If you are on a Navy repair ship, you may frequently have to produce castings by using the old casting (worn or broken) as a pattern. This is a type of job that calls for skill and special technique. Although the pattern used for the original casting might have presented no problems in respect to ramming or withdrawing it from the mold, using the casting itself as a pattern may be a much more complex job.

It is customary in a case of this sort to make use of a drawback, which is a green sand core made with a special molding technique. This drawback serves a function similar to the loose pieces of a complicated pattern. It is rammed up in the mold on a supporting structure, so that it may be drawn back and lifted away to clear an overhanging portion of the pattern (worn casting), and facilitate pattern removal. (See fig. 7-41.)

The mold face contour of the drawback is formed by the pattern itself, rather than in a

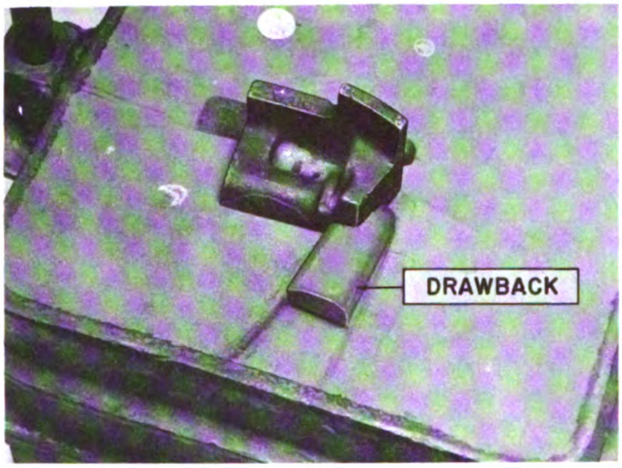

18.22.1

Figure 7-41.—A drawback.

core box. After the old casting has been removed from the mold, the drawback is relocated in the mold to form the cavity.

In chapter 6 of Molder 1 and C, NavPers 10585-A, you will find a detailed discussion of how to use a drawback when you must meet such problems as an irregular parting line, small but deep pockets, and one or more depressed areas in the old casting that would interfere with drawing the pattern from the mold.

MOLD PRESSURE

It is common knowledge that an object that is heavier than a liquid in which it is placed will sink, while on the other hand, an object that is lighter than the liquid will float. Resting on the surface of a liquid is called flotation. For example, cast iron weighs 0.26 pounds per cubic inch, and molding sand weighs approximately 0.06 pounds per cubic inch. Accordingly, molding sand is lighter than cast iron, therefore, the total weight of the sand in the cope section of the mold has to be greater than the weight of the molten metal upon pouring or the cope will tend to float. During the pouring of the mold, the tendency for the cope to float can be overcome by either weighting the mold or clamping the mold parts together.

Metal in the liquid or molten state has the power to transmit pressure to every part of the mold in which it is poured; and when the mold is full, the molten metal sustains a pressure equal to the weight of a column of metal reaching to the uppermost surface of the pouring basin. Therefore, it can be said that the weight of the molten metal and the height of the metal column will influence the ability of the molten metal to exert pressure on the mold. In other words, the lifting force of the molten metal is due to the fact that a liquid will seek its own level and that the pressure of the liquid is exerted equally in all directions.

Consider what happens in a mold when it is poured full of molten metal. The molten metal enters the mold through the sprue opening at the uppermost surface of the mold, flows through the sprue, gates and runners, and finally into the mold cavity in the drug. The mold underneath the casting will have to support the weight or pressure exerted by the metal in the mold. Since the mold has a cope, the casting itself will be under a head pressure which is equal to the thickness of the cope half of the mold. (For example, if the cope is 5 inches thick, the mold will be under a head pressure of 5 inches when the mold is poured.)

The downward pressure on the drag half of the mold generally will be less than the lifting pressure on the cope. However, the downward pressure will have no effect on the mold, but the upward pressure will tend to lift the cope when the mold is poured. To overcome the tendency of the cope to rise or float during the pouring of the mold, the mold is either weighted or clamped. As an added safety precaution, the weight placed on the top surface of the cope should be increased to be 50 percent greater than the lifting force of the molten metal.

By simple mathematics, the lifting pressure on the cope can be calculated by multiplying the surface area in square inches at the parting line, times the head pressure in inches, times the weight of the metal in cubic inches. The downward pressure on the drag can be calculated by multiplying the surface area (at the parting line) in square inches times the thickness of the casting, times the head pressure in inches times the weight of the metal in cubic inches. Subtracting the downward pressure from the lifting pressure will give the amount of weight necessary to equalize the lifting force since the momentum of the molten metal flowing into the mold will lift the cope half of the mold.

To determine the necessary weights required to keep the cope half of the mold from lifting, the following procedure is suggested:

1. To determine the lifting pressure:
   a. Calculate the surface area of the casting at the parting line of the mold in square inches.

b. Multiply the number of square inches in surface area by weight per cubic inch of the type of metal to be poured.
   - (1) Cast Iron . . . . .0.26 pounds per cubic inch
   - (2) Brass . . . . . . .0.312 pounds per cubic inch
   - (3) Bronze . . . . . .0.312 pounds per cubic inch
   - (4) Aluminum . . . .0.089 pounds per cubic inch
   - (5) Steel. . . . . .0.2817 pounds per cubic inch
   - (6) Lead. . . . . .0.4096 pounds per cubic inch

c. Multiply the product by the depth in inches of the cope.
(Note: A sprue extends to the top of the cope and multiplies the pressure by its depth in inches. A pound of pressure exerted on a surface exerts itself in all directions.)

2. To determine the weights that should be used to overcome the lifting pressure:

a. Calculate the lifting pressure as in step 1.

b. Disregarding the weight of the flask, mold supports, etc; and the volume contained in the sprue and risers, calculate the weight of the molding sand by multiplying the number of cubic inches of sand by the weight of the sand in pounds per cubic inch.
(Molding sand will weigh approx. 0.06 per cubic inch.)

c. Subtract the weight of the sand from the lifting force to determine the force that must be overcome.
(Note: A safety margin of 50 percent must be added to the weight added to the cope to equalize the lifting force since the momentum of the molten metal flowing into the mold will lift the cope.)
For example:

Consider a snap flask with inside dimensions of 16 inches x 14 inches, and a 6-inch cope. The mold cavity has dimensions of 12 inches x 8 inches x 4 inches deep. The mold is to be poured from brass.

1. Determine the lifting force.
   a. 12" x 8" = 96 square inches at the parting line.
   b. 96 square inches x 0.312 lbs. per cu. in. = 29.852 pounds.
   c. 29.852 pounds x 6 inches = 179.102 pounds
2. Determine the necessary weight.
   a. 29.852 pounds x 6 inches = 179.102 pounds
   b. 16" x 14" x 6" x 0.06 pounds per cubic inch = 80.64 pounds
   c. 179.102 pounds-80.64 = 98.462 pounds
      98.462 pounds + 50 percent =
      98.462# + 49.231# = 147.693 pounds of weight necessary on the upper surface of the cope to overcome the lifting force and the momentum of the molten metal upon pouring.

CHAPTER 8

CORES

Many of the castings which are produced in Navy foundries are not composed of solid metal, but have voids or hollow areas, either internal or external. To prevent the molten metal poured for the casting from filling these cavities (void areas), sand cores of the appropriate size and shape are inserted at the necessary locations in the mold cavity before the mold is closed and poured.

Cores may be defined as masses of sand that are placed in the mold, or left in the mold by the pattern, for the purpose of forming openings and various shaped cavities and contours in the casting. Cores may control the casting's interior and exterior or the flow of metal into the mold cavity. In addition, a core may make it possible to draw a portion of the pattern from the sand, which ordinarily would not be possible because of the shape of the pattern; or a core may be used to improve a particular surface due to the core's special characteristics.

Cores are used in nearly every mold to form the inside of a casting. As most castings are of such shape that it is difficult and often impossible to machine the interior shape, the cores must be made accurately. The cores must also be capable of transferring a smooth surface to the casting, true to the designed contour.

Cores are shaped by the use of specially prepared boxes, through the use of sweeps, or by a combination of these methods. (See chapter 9.) The use of core boxes is preferred because of improved core surface conditions, better dimensional control, and greater resistance to erosion caused by the churning action of the molten metal during the pouring of the mold.

A satisfactory core maintains its strength during the initial stages of metal solidification; but, at the proper time after initial metal solidification (skin formation), the core disintegrates to permit normal metal shrinkage during the final phases of the casting's solidification.

This chapter describes the various classes and characteristics of cores, the influence of the core as related to a specific metal and the mold, types of core prints, and cores and their application. The following chapter describes core materials, core sand mixes for green sand cores, baked or dry sand cores, green-topped cores, CO_2 cores and shell cores, coremaking equipment, and the proper coremaking techniques.

CLASSES OF CORES

There are five classes of cores:

1. GREEN SAND cores are sand projections made from regular molding sand and are formed in the mold by the pattern itself. (See fig. 8-1.) However, the sand projections formed by the pattern cease to be called cores when they do not form a hole through the casting. They then are considered as part of the mold contour.

2. BAKED or DRY SAND cores are made from special core sand mixtures and baked for a specific time depending upon the size and shape of the core mass. (See fig. 8-2.)

3. GREEN-TOPPED cores are combinations of green sand cores and baked cores; that is, part of the core is baked while the remainder is green sand. (See fig. 8-3.)

4. CO_2 cores are made by mixing silica sand with sodium silicate (water glass); then hardening the mixture by gassing it with carbon dioxide (CO_2) for a few seconds. This type of core has many advantages: (1) pasting of cores may be eliminated, making a one-piece core possible, (2) there is no danger of drop-outs, soft spots, or wet spots, (3) less draft is required for any loose piece, (4) there is a saving in baking or drying time, and (5) closer dimensional tolerances are possible. (See fig. 8-4.)

5. SHELL cores are made from a resin-sand mixture and are formed on the inside of a hot, parted metal core box. Most cores are hollow

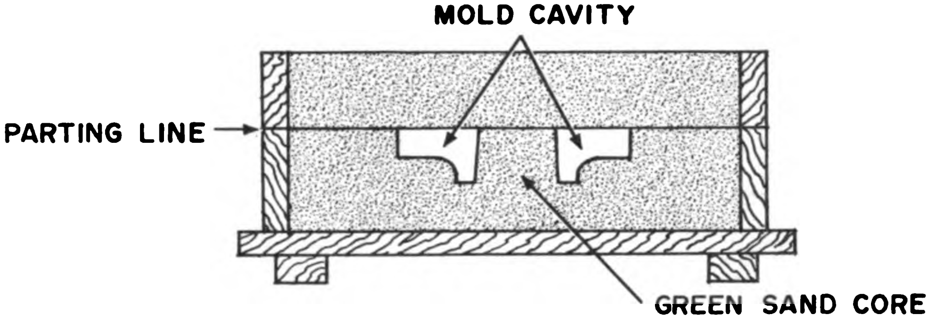

102.76

Figure 8-1.—Green sand core.

and serve as vents for the removal of gases; thereby making it possible to produce castings with a minimum of locked-in stresses. Using parted metal core boxes simplifies complicated coring since intricate cores can be made in one piece. (See fig. 8-5.)

6. AIR SET cores are made from a silica sand and a resin binder. A catalyst (acid) is added to the mixture to increase the setting time of the core. The amount of catalyst used, the size and shape of the core, and weather conditions determine the setting time. Before using this class core, samples should be made to determine the validity of material for specific needs. Cores of this type need less rod support than other types, require no oven, finish clean and smooth, have good collapsibility, and are easy to shake out.

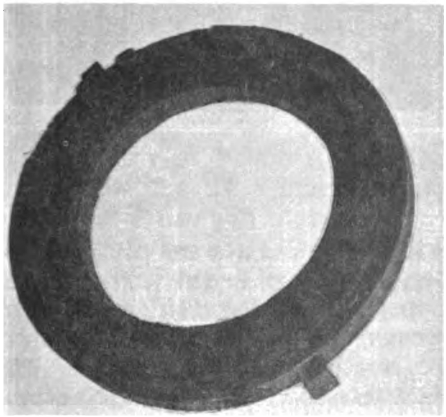

102.77

Figure 8-2. — Baked or dry sand core.

CHARACTERISTICS OF CORES

Of the five classes of cores (baked sand, green sand, green-topped, CO_2, and shell cores) the baked sand core is chiefly used aboard ship. (Some repair ships and tenders have done away with baked sand cores altogether, using nothing but CO_2 cores.) Regardless of class the following characteristics are required of any core.

1. It should hold its shape before and during the baking or drying period.

2. It must be capable of being baked or dried rapidly, but thoroughly.

3. It should have hardness sufficient to resist the eroding action of the flowing molten metal.

4. It should produce as little gas as possible when it contacts the molten metal.

5. It should have sufficient permeability to permit easy escape of gases during pouring.

6. Its surface must be such as to prevent metal penetration.

7. It must have sufficient refractoriness to resist the heat of the molten metal at pouring temperature.

8. It must have sufficient hot strength to withstand the weight of the molten metal at its pouring temperature and during the beginning stages of solidification.

9. It must have collapsibility, sufficient to prevent cracks or hot tears in the casting.

10. It must retain its strength properties during storage and handling; and if the mold in which it is to be positioned must stand for a considerable length of time before the metal is poured, the core must not absorb more than a minimum amount of moisture.

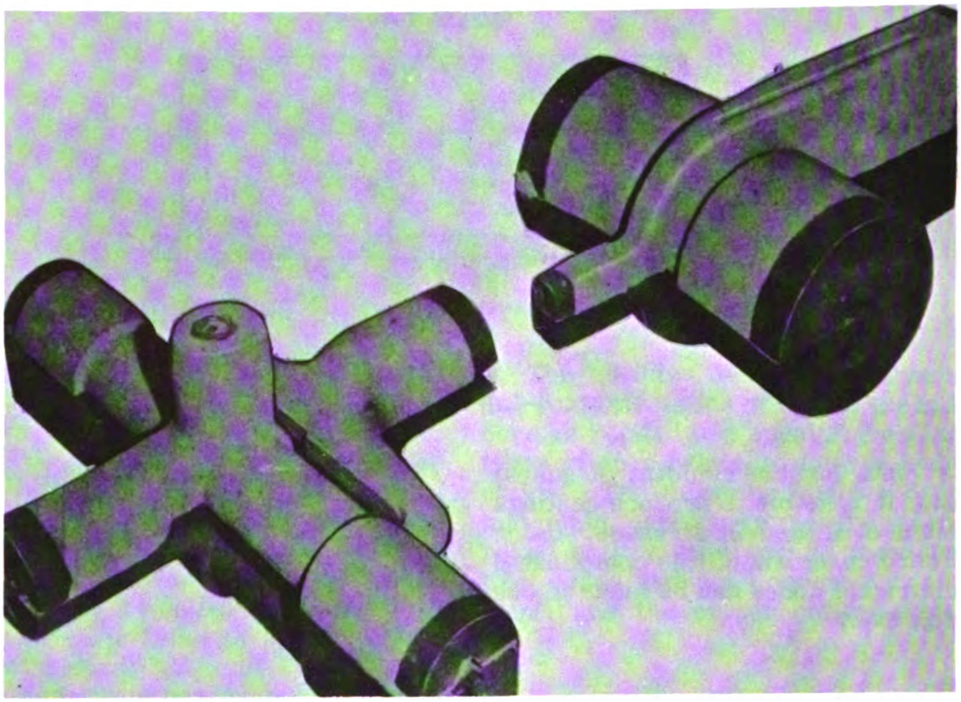

102.7

Figure 8-3.—Green-topped cores for valve bodies.

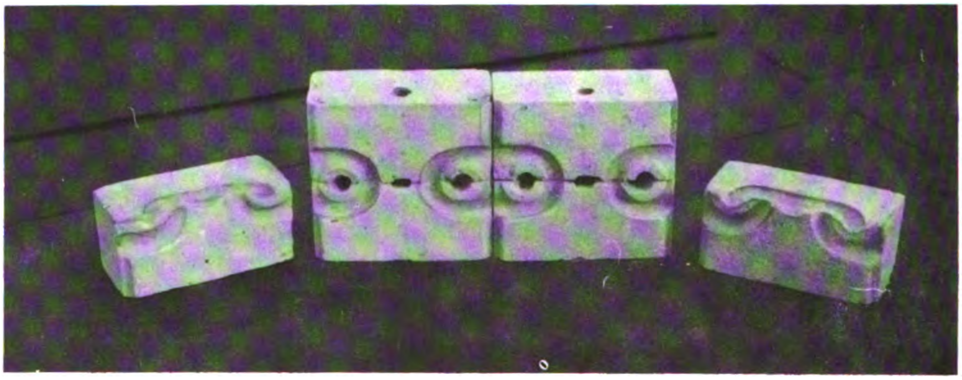

102.7

Figure 8-4.—CO_2 cores for anchor chain.

In addition to these special characteristics, the properties discussed for molding sands also apply to core sands.

CORE REQUIREMENTS FOR CAST METALS

The classes and the requirements of cores should be studied in regards to a specific metal that is to be cast. Each metal or alloy may require an alteration in the percentage of ingredients that go into the making of a proper core mix because of the manner in which the metal behaves during the liquid state. The weight (density), the eroding or cutting action, the degree of shrinkage and contraction, and the rate of solidification of the metal should be studied before determining the correct core sand mixture.

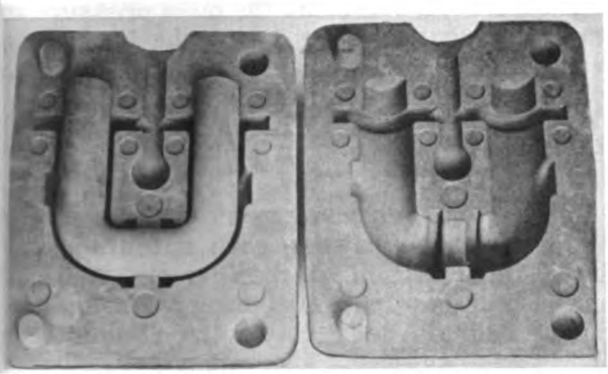

23.183

Figure 8-5.—Bypass mold halves, with shell core.

Information related to core requirements for he commonly cast metals and alloys used in the Navy follows.

REFRACTORINESS

When you are casting aluminum, all core mixtures must provide sufficient heat resistance due to the low melting point and pouring temperature of the metal.

For casting brass and bronze, the core sand must have a sintering point of 2300° F, or higher.

When you are casting cast iron, the core sand must have a sintering point of 2700° F, or higher.

When casting steel, a high purity, round grain, silica sand or Zircon sand may be used for maximum heat resistance.

STRENGTH

Aluminum requires a minimum of strength because of the light weight of the metal and the ow mold pressure.

Brass and bronze require sufficient dry strength to resist the lifting force of approximately 4.3 times the weight of the core.

Cast iron requires a minimum of dry strength o resist the lifting force of approximately 3.5 imes the weight of the core, and sufficient hot strength to resist the lifting force in the hot state prior to the solidification of the metal.

Steel requires sufficient dry strength to resist the lifting force of approximately 3.9 times he weight of the core, and sufficient hot strength o resist the lifting force in the hot state prior o the solidification of the metal.

COLLAPSIBILITY

Cores for aluminum must collapse readily due to the high shrinkage and contraction, and the weakness of the metal at elevated temperatures.

Brass and bronze require an average amount of collapsibility. However, the core must not collapse until a thick skin of metal has formed against the core.

Collapsibility is an important factor in cores for cast iron. High temperatures and slow cooling usually destroy the bonding ingredients. Therefore, cast iron is not particularly susceptible to "hot tearing."

GAS GENERATION

Gas generation in cores for aluminum castings must be as low as possible.

Gas generation in cores for brass and bronze is not critical because it is slow in forming, thus allowing sufficient time for the gas to escape through the normal permeability of the sand and through the gating system.

Gas generation in cores for cast iron is an important factor; however, a rapidly solidifying skin of metal resists the gas penetration in the casting and forces it out through the venting system of the mold.

Gas generation in cores for steel will normally be high; and the gas will generate very rapidly.

PERMEABILITY

Permeability is desirable in cores for aluminum because of the close connection with the density of the core.

Cores for brass and bronze castings require a low permeability because brass and bronze often have a penetrating power that forces the molten metal between the grains of sand.

Cores for cast iron require a high permeability because gas is generated at a rapid rate and must be allowed to escape as fast as possible.

Cores for steel castings require a high permeability because gas is generated at a rapid rate and must be allowed to escape as fast as possible.

SURFACE HARDNESS

Aluminum requires a minimum of surface hardness because aluminum when in the molten state has little or no cutting or eroding action.

Brass and bronze require a high degree of surface hardness because of the cutting and eroding action of the molten metal.

The surface hardness required for a core for casting cast iron depends on the amount of metal impressing on the core and the amount of metal that is to flow over the core.

Surface hardness of a core for steel should be very high because the turbulence of the molten metal gives it a cutting and eroding action during the pouring of the mold.

DENSITY

The density required of a core for aluminum must be held to a minimum to ensure good collapsibility and permeability.

The density required of a core for brass and bronze must be high because of the cutting and eroding action of the molten metal.

The density required of a core for cast iron must be held to a minimum; however, penetration is not an important factor in average size castings.

The density required of a core for steel must be as high as possible to maintain permeability and collapsibility.

MOLD INFLUENCE ON A CORE

In addition to the general characteristics and the requirements of a core for a specific metal or alloy, certain alterations to the core properties may be necessary in regard to the green sand mold.

Information related to the alterations that may be required to the core properties as related to a mold follows.

CORE PRINTS

When a green sand mold has insufficient core support to hold the core in its proper position in the mold during the pouring of the molten metal, additional strength may be incorporated into the core. Such factors as the type of strain caused by the molten metal and the direction of the force must be considered.

SPRUE HEIGHT

When a mold is of such size that an increase in the height of the cope half of the mold is necessary, the additional sprue height that is required will increase the mold pressure around the core. To overcome the mold pressure and the strain on the core during the pouring and solidification of the metal, an increase in the density of the core is necessary.

METAL THICKNESS

When small cores are surrounded by a heavy metal thickness causing core strain and additional mold strain at these spots, the small cores will require a high degree of refractoriness, a high density, and a low collapsibility.

GATING SYSTEM

When the molten metal being poured runs from a gate in such a manner that the metal impresses on a core, or the gate(s) directs the flow of metal in such a fashion that it flows against a core, a high degree of surface hardness is required of the core.

TYPES OF CORE PRINTS

When a core is placed in a mold, there must be some means provided to locate, hold, and anchor it in position. In order to do this, a projection is designed and added to the pattern. The projecting pieces, called **CORE PRINTS**, are attached to and become a permanent member of the pattern. The core prints make an impression in the sand, thus forming a seat into which the core is set and retained in its proper position. If it is possible for a core to be set in the mold **UPSIDE-DOWN** or **WRONG-END-TO**, locating marks called **WITNESS MARKS** (core markers or tell-tales) should be provided to prevent any possibility of placing the core the wrong way, in the mold.

Although there are no fixed rules as to the length of the core prints or how much draft they should have, good pattern practice on the part of the Patternmaker requires that there should be sufficient bearing surface to support the weight of the core (depending on the type of mold in which the core is supported) and the pressure of the molten metal when being poured.

Although there are numerous types of cores and variations of them, core prints may be classified into five general types: (1) cope and drag prints, (2) horizontal or parting line prints, (3) balanced prints, (4) suspended or hanging prints, and (5) tail or drop prints (see fig. 8-6).

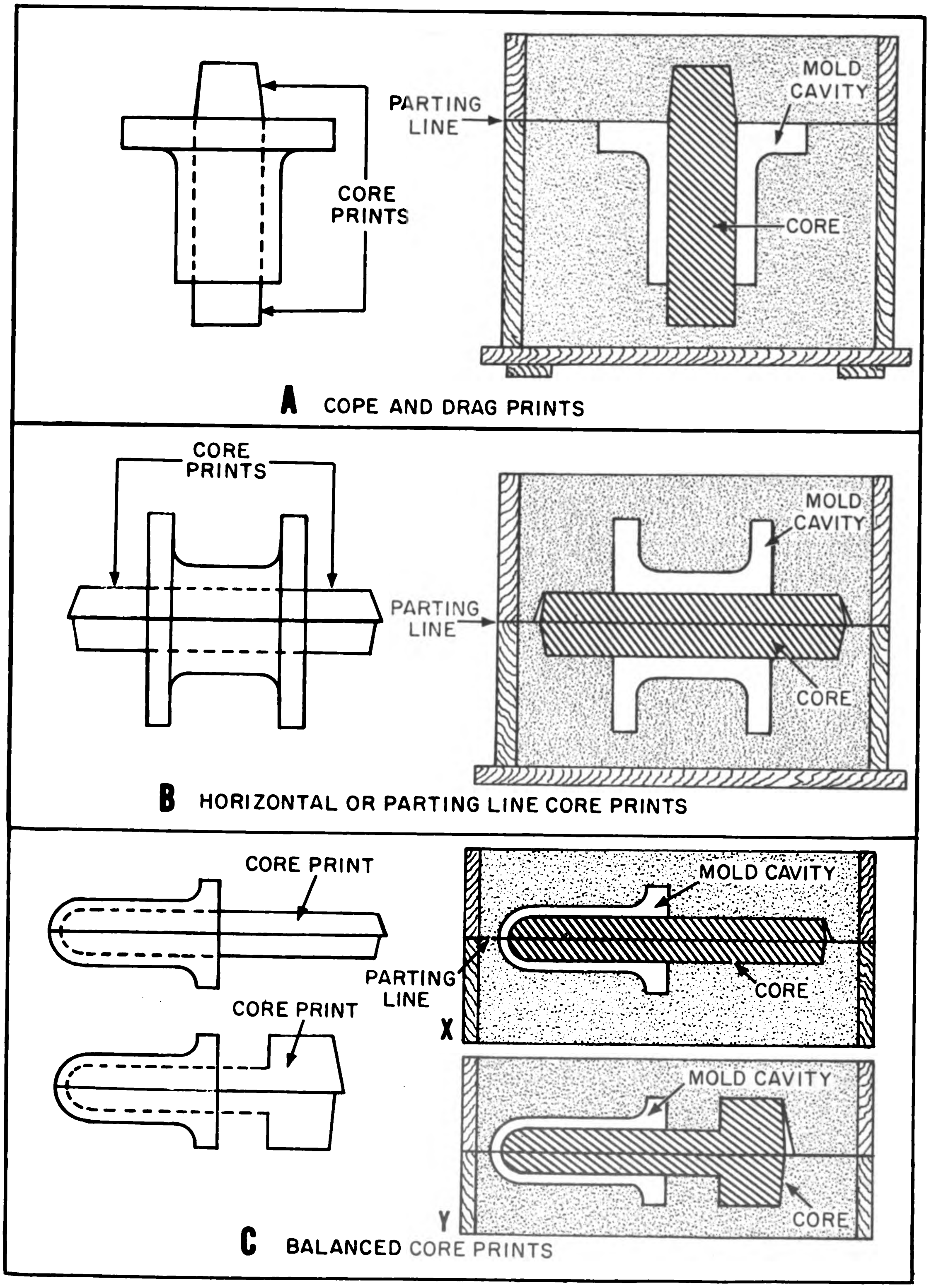

68.108

Figure 8-6.—Types of core prints and simple applications.

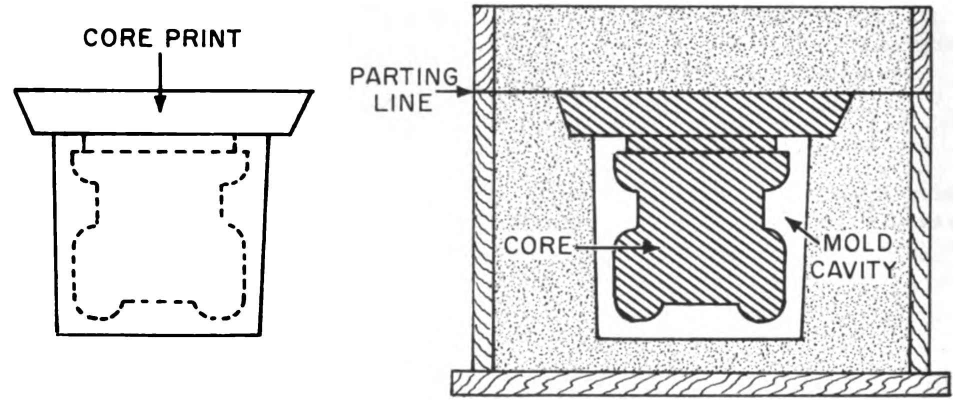

D SUSPENDED OR HANGING CORE PRINTS

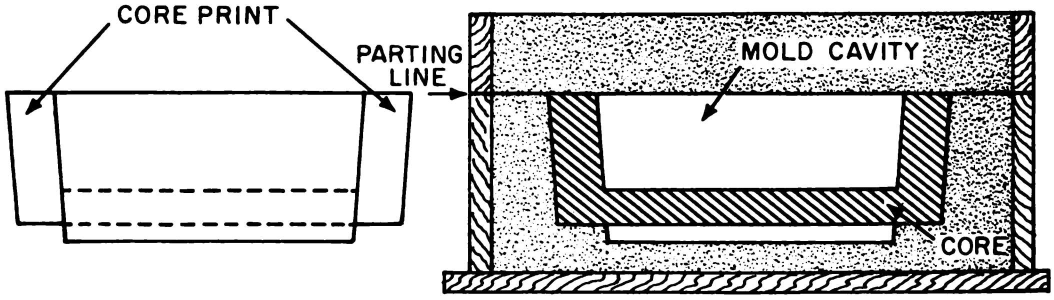

E TAIL OR DROP CORE PRINTS

Figure 8-6.—Types of core prints and simple applications—Continued.

COPE AND DRAG CORE PRINTS

When a core is set vertically in a mold, core prints are placed on the cope and drag of the pattern, thus giving the names COPE and DRAG prints (see part A of fig. 8-6). The cope print is made with considerable taper (draft) as an aid in centering the core and to facilitate the closing of the mold; while the drag print has only a slight taper for ease in handsetting the core.

HORIZONTAL OR PARTING LINE CORE PRINTS

Horizontal or parting line prints are used to form the core seats when the core is placed in a horizontal position. (See part B of fig. 8-6.) The core prints are usually the same in diameter as the diameter of their respective cores. In addition, they should be long enough to give a solid bearing surface for the weight of the cor plus the stress caused by the molten metal as fills the mold; otherwise the molten metal wi raise or displace the core, making the castin thinner on one side.

BALANCED CORE PRINTS

When a core is placed horizontally withi a mold and receives its entire support from o end, the core print is so proportioned that it wi outweigh or overbalance that portion of the cor extending into the mold cavity. (See part C o fig. 8-6.)

Two methods may be employed to achie this balance. The first method is to have th core print long enough to balance the weight o the unsupported end. The second method (recommended when an extra long core print is n practical) is to have the core print(s) enlarg by adding a flange or an offset section to give added weight to the supported end of the core. In addition, the flanged or offset section may be used as a witness mark to establish the exact depth of the core in the casting. When using balanced prints, consideration must be given to the length of the print. It would be impractical to balance a core with a print several feet in length, instead chaplets (metal core supports) should be used to support the end of the core within the mold cavity.

SUSPENDED OR HANGING CORE PRINTS

A type of print called a SUSPENDED or HANGING core print derives its name from the fact that the core serves two purposes: (1) as a support for the hanging part of the main body of the core, and (2) as a complete cover for the mold. (See part D of fig. 8-6.) Therefore, suspended or hanging core prints are used when a cored casting is to be molded entirely in the drag. In addition, variations of this core print will eliminate the need for a three-part flask.

TAIL OR DROP CORE PRINTS

On special jobs where cored holes are required above or below the parting line, a TAIL or DROP print is used. (See part E of fig. 8-6.) The print is so shaped that the seat portion allows the core to be easily dropped in place. In addition, holes on top of or behind bosses may be cored in this manner. The print portion of the core serves as a means of STOPPING-OFF the core seat and of locating the projecting core that forms the opening. Stopping-off or blocking-off the core seat may be done by filling in with a stock core after the projecting core has been set; or, after the projecting core has been set, by tapping molding sand into the core seat impression. In many cases, a single core print is sufficient when the projecting part is not too long; however, if the projecting part is long, the core should be supported at both ends.

TYPES OF CORES

Each and every casting job presents specific problems that will constantly challenge your skill and ingenuity. The most difficult phase of foundry practice is visualizing the interior shape of a casting. As an aid in visualizing, brief descriptions of the types of cores and their uses are given in the following sections. (To avoid confusion, the gating system—pouring basin, sprue, runner, in-gates and risers—that is necessary in producing a casting will not be shown.)

STOCK OR STANDARD CORES

Stock or standard cores are made in core boxes of standard lengths. These cores are kept in stock in the foundry for immediate use. Stock or standard cores are made in simple shapes, such as round, square, rectangular, and elliptical and may be used either horizontally or vertically. (See parts A and B of fig. 8-6.)

Stock cores are helpful when billets of a standard size are to be cast. Billet patterns should be constructed in a set, such as a 2-inch outside diameter up to a 12-inch outside diameter with standard lengths of 6, 9, 12, 15, and 18 inches. The series (or set) of patterns are made in 1/2-inch diameter increments, while the core boxes are made in 1/4-inch diameter increments. Interchangeable cope and drag prints are used in conjunction with the set of billet patterns, making it possible to cast billets of the same outside diameter but of different inside diameters.

BALANCED CORES

Balanced cores are cores with the core seat so proportioned that it will overbalance that part of the core extending into the mold cavity. They are used on horizontal cores only. (See part C of fig. 8-6.)

View X in part C of figure 8-6 shows a cross section of a cylindrical casting containing a cavity that extends only part of the way into the body. If the cavity had extended clear through the casting, there would be no problem. A core print could be built on each end of the pattern to provide the seat for the core in the mold. However, since the cavity penetrates only part of the way into the body of the casting, there is a need for a balanced core print to seat the core properly. Notice that the core print is longer than the cavity in the casting. This balances the core in the mold and helps to resist the tendency of the pressure of the molten metal to float the core.

View Y in part C of figure 8-6 illustrates the procedure for using a balanced core print of a flanged nature. The larger core print of the flanged type eliminates the extra length needed for balancing the extended portion of the core in the mold cavity. In addition, the flanged type balanced core print has a positive core locating feature. This feature is called WITNESSING or REGISTERING a core. The witness mark eliminates the possibility of placing the core in the mold in any position other than the correct one.

SLAB CORES

Slab cores are plain flat cores (stock cores) used to cover an opening formed by the withdrawal of a loose piece of the pattern during the ramming-up process. They are made in stock boxes and used as necessary. Slab cores eliminate the use of an additional section of a flask (cheek).

A method of producing a four-flanged pipe connection using a slab core is illustrated in figure 8-7. Part A of figure 8-7 is an exploded isometric view of the pattern and loose flange; part B is an exploded orthographic side view of the pattern, the loose flange, and the slab core; parts C, D, and E illustrate steps in the production of this four-flanged pipe connection; and part F illustrates the finished casting. (Remember, the gating system is not shown in fig. 8-7.)

Since the procedure for this job differs from the usual methods of molding, a brief description is given in the following paragraphs.

The procedure for a four-flanged pipe connection has two important aspects: Ramming up the slab core upon removal of the loose flange, and the elimination of a cheek section of the mold. To insert the slab core requires a certain sequence of operations. The sequence and techniques involved are as follows:

1. Place the drag flask, joint down, on a molding board and position the drag half of the parted pattern in the flask. Ram the drag in the usual manner up to the top of the loose flange. (See part C of fig. 8-7.) Withdraw the loose flange from the partially completed drag and place the slab core over the flange opening core print. Ram up the remaining portion of the drag, place a bottom board on top of the drag, and roll the flask over.

2. Slick the parting surface of the drag, sprinkle parting sand (partine) over the parting and place the cope of the pattern and flask in position. Ram the cope in the usual manner. (See part D of fig. 8-7.)

3. Remove the cope section of the mold from the drag, and withdraw the cope pattern. Withdraw the drag pattern from the drag section of the mold. Check the mold interior carefully and repair damage as required.

4. Set the interior core in the mold cavity of the drag, taking extreme care in locating the core print of the "T" section into the hole in the slab core (see part E of fig. 8-7). Close and clamp the mold for pouring. The completed casting is illustrated in part F of figure 8-7.

COVER CORES

A cover core is a core set in place during the ramming of a mold, to cover and complete a mold cavity partly formed by the withdrawal of a loose part of the pattern. A cover core is used in the same manner as a slab core.

The term "cover core" as commonly used, refers to a cope or drag section of the mold which is made of oil-bonded sand in a core box instead of the usual practice of forming it in green sand in a flask. The underside of the cover core can be flat or contoured, depending on the conformation of the shape of the loose portion of the pattern. The core box is designed accordingly.

The cover core may be made in one or more sections depending on the shape and area to be covered. In certain types of large castings, use of sectional cover cores eliminates the use of large flasks and permits the cover cores to be made at the same time as the main mold, or prior to the preparation of the main mold.

A method of producing a four-flanged pipe connection using a cover core is illustrated in figure 8-8. Part A of this illustration is an exploded isometric view of the pattern and the loose core print for the cover core; part B is an exploded orthographic side view of the pattern and the loose core print for the cover core; parts C, D, and E illustrate the steps in the molding of a pattern with a cover core; and part F illustrates the finished casting. (Remember, the gating system is not shown in fig. 8-8.)

Basically, the sequence of operations and techniques for molding a pattern with a cover core is the same as for a slab core. The main difference is that the loose piece on the pattern for the core print of the cover core takes not only that portion that locates the core print of the main body core, but also the full shape and size of the flange.

SUSPENDED CORES

A suspended core is a core having the core seat so formed that it may be suspended above

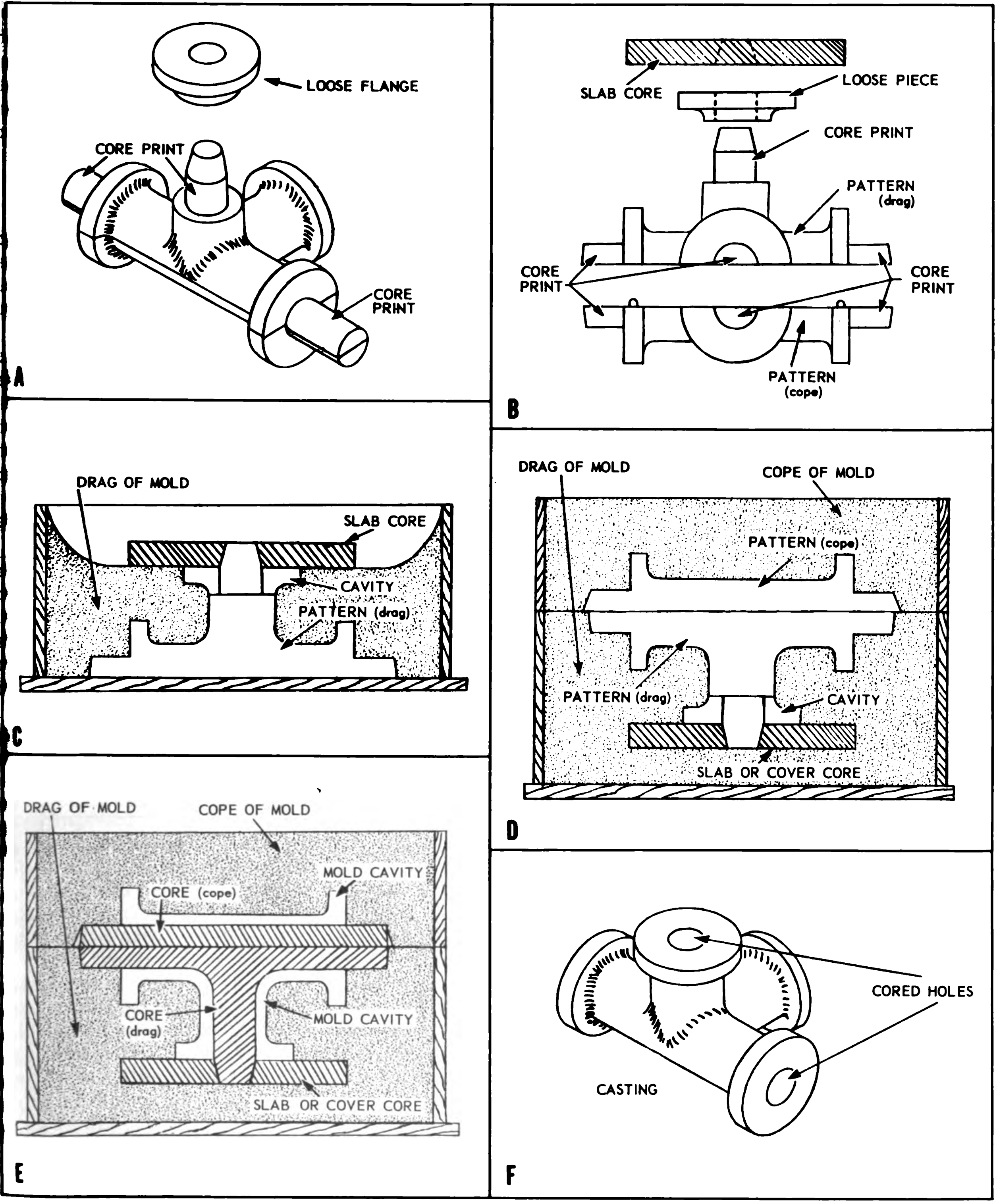

68.110

Figure 8-7.—Application of a slab core.

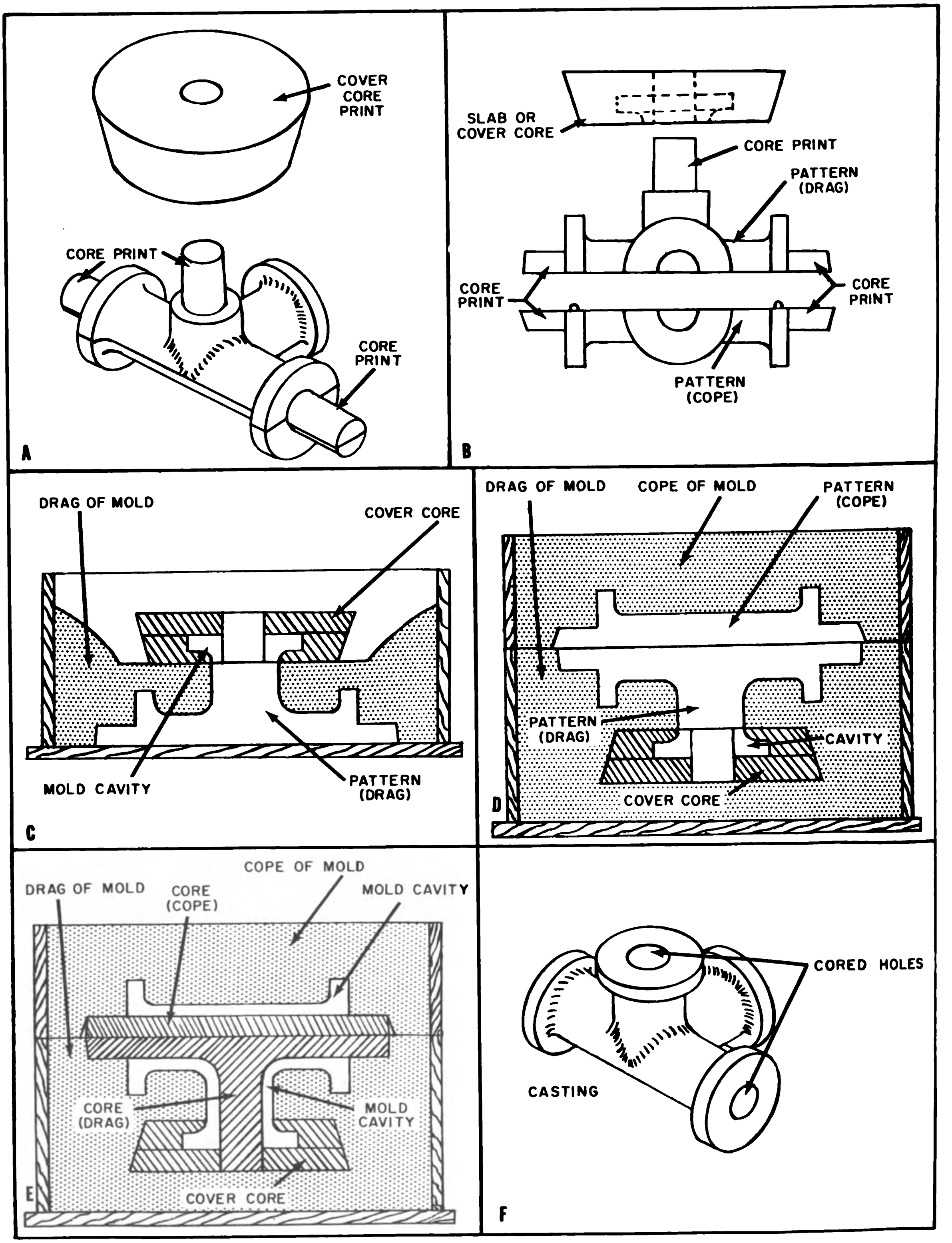

68.11

Figure 8-8.—Variation of a slab core—a cover core.

the mold cavity. (Part D of fig. 8-6 illustrates this principle of coring.)

The core print extends beyond the pattern body and forms a seat, which automatically locates, registers, and supports the suspended core. The core print of the suspended core is formed in the drag half of the mold at the parting line; therefore, when the core is set, it covers the entire mold cavity except for the gating system. The contact area between the parting surface of the cope and the top surface of the set core prevents the suspended core from floating during the pouring of the mold.

The bearing surface of the core print should be adequate to seat and carry the full weight of the core. Therefore, the thickness of the core should be sufficient to allow reinforcing rods to be inserted in the dry sand core.

The molding position for a pattern using a suspended core will force any impurities in the molten metal to rise to the cope surface of the casting where ample finish allowance can be provided.

SUPERIMPOSED OR CAP CORES

A superimposed or cap core is a core or set of cores superimposed upon a pattern to complete a portion of the mold cavity not given shape by the body of the pattern. A part of the pattern is actually built in a core box, which requires the making of an oil-bonded core instead of the usual practice of forming the core in green sand. The oil-bonded core is used in the same manner as a slab core, cover core, or a ram-up core. The superimposed or cap core may be made in one or more sections depending upon the detail, shape, and area to be completed.

A method of producing a casting using a superimposed or cap core is illustrated in figure 8-9. Part A of figure 8-9 is an isometric view of the pattern; part B is an exploded orthographic view of the pattern and superimposed core; parts C, D, and E illustrate the steps in the molding of a pattern with a superimposed core; and part F illustrates the finished casting. (Remember, the gating system is not shown in fig. 8-9.)

Basically, the sequence of operations and techniques for molding a pattern with a superimposed core is the same as for one with a slab core or cover core. The main difference is that the shape of the cope side of the pattern requires a false cope, a sand match, a follow block, or a follow board to be used for support of the pattern during the ramming of the drag half of the mold. (See part C of fig. 8-9.)

KISS CORES

The term "kiss core" as commonly used means a core that contacts another core or is set against the side of a pattern to supply a portion of the mold cavity not furnished by the pattern. It may have no core prints and may depend on contact pressure to hold the core in place. It may be partially anchored with core prints and may depend on other parts of the core to kiss the mold for further support. It also may be anchored on one end with prints, and with the other end of the core touching the mold or another core.

Some cores such as the kiss core shown in figure 8-10 do not require a core print for holding the core in position. They depend on contact pressure of the green sand. Cores for vertical holes are frequently held in position in this manner and may be used in places where dimensional accuracy is unimportant. The length of the core is 1/64 inch longer; therefore, the core projects slightly above the parting plane and is held in place by the contact pressure of the cope.

Castings such as the piston for a weight-loaded reducing valve shown in figure 8-11, require a different application of a kiss core. The pattern for this piston requires core prints for support of the core on the inside diameter and the horizontal openings (ports). The vertical openings require a core that only goes through the casting wall and touches the green sand of the mold ("kissing thru").

A method of producing a piston for a weight-loaded reducing valve using this application of a kiss core is illustrated in figure 8-11. Part A of this illustration is an isometric view of the pattern and core; part B is an exploded orthographic side view of the pattern; parts C, D, and E illustrate the steps in the production of this piston; and part F illustrates the finished castings. (Remember, the gating system is not shown in fig. 8-11.)

Another application of the kiss core is for casting holes located at an angle to the withdrawal of the pattern from the mold. In this case, all the holes are made using the plug type impression, since it is impractical to draw the pattern from the sand with the core prints set at an angle. Holes are drilled in the pattern at the exact location and angle required. These

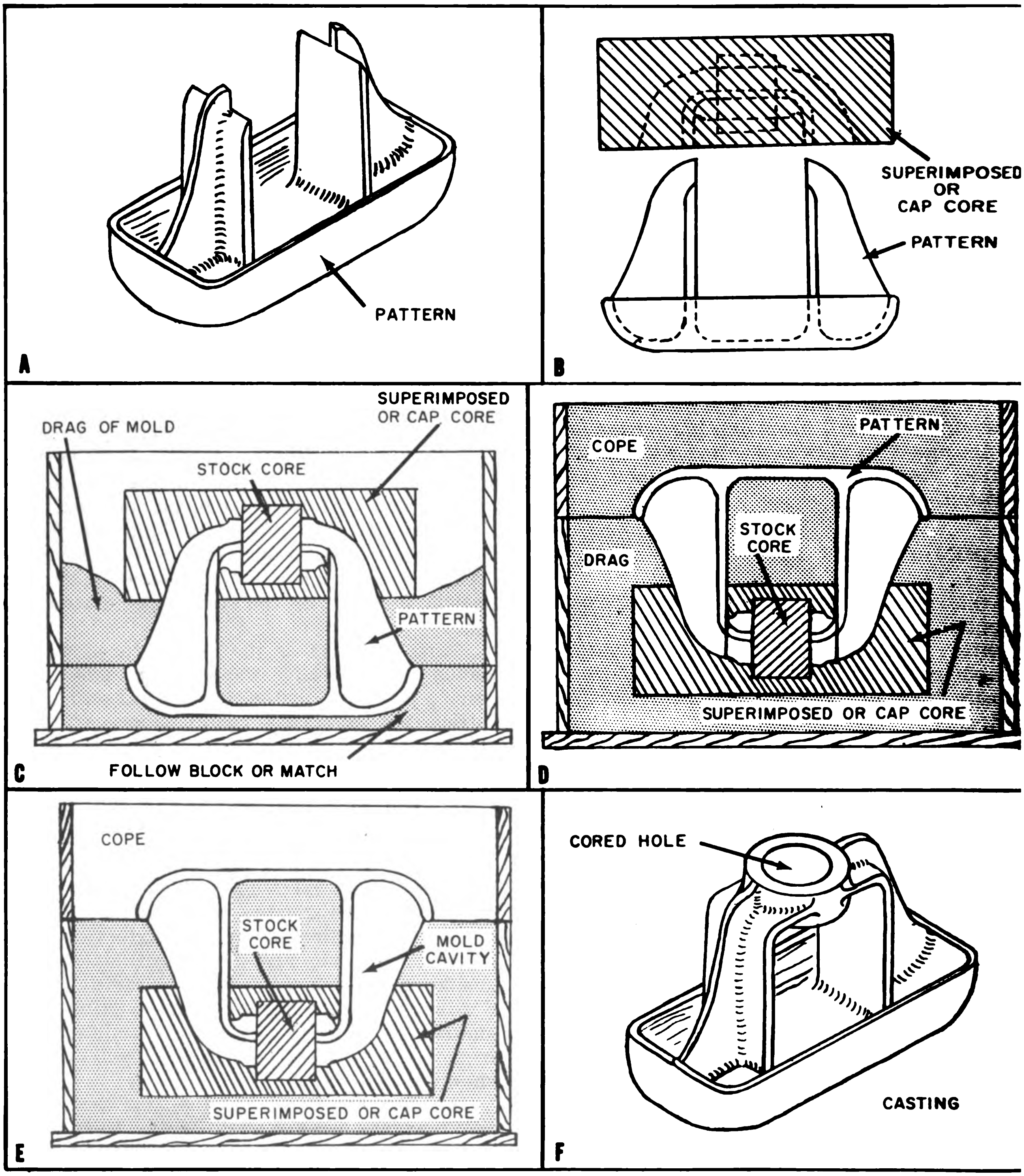

68.1

Figure 8-9.—Application of a superimposed or cap core.

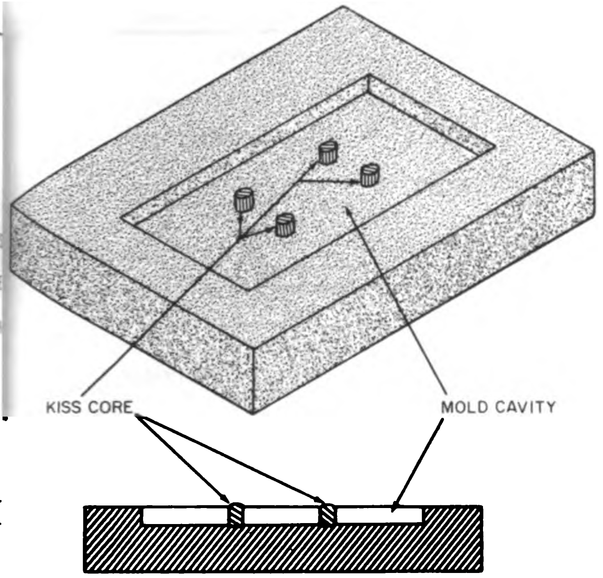

18.55
Figure 8-10.—Kiss core application—no core prints.

holes are drilled 1/32 inch larger in diameter than shown on the blueprint. A plug is turned to the exact diameter of the holes shown on the blueprint, thus creating a free-running fit between the plug and the hole. The plug should have a stop on one end and a taper on the other end for the core print. The pattern is rammed up in the usual manner. After the cope is lifted off the drag, the plug is pushed through each hole to the stop on the plug, causing each hole in the green sand of the drag to be the same depth. The pattern is withdrawn from the drag, then small cores known as STUB CORES are inserted in the angled holes formed by the core print section of the plug. The core print on the stub core matches the core print on the plug; since the cores are all the same length, they will be flush with the face of the mold. When the cope is reset on the drag, the pressure from the parting surface will hold the stub cores in place.

The method of producing a bracket having holes cast on an angle and for molding a pattern using a kiss core that has only a single vertical core print is illustrated in figure 8-12. Part A of this illustration is an isometric view of the pattern and turned plug; part B is an orthographic view of the pattern showing the bored holes; parts C, D, E, F, and G illustrate the steps in the production of this bracket; and part H illustrates the finished casting. (The gating system is not shown in fig. 8-12.)

RAM-UP CORES

Ram-up cores are used to form portions of a casting that are difficult to make in green sand. They are incorporated in the mold during ramming rather than after the mold is rammed. The ram-up core is positioned in the flask with the pattern and then remains in the mold after the pattern is withdrawn; the principle is illustrated in figure 8-13. When ram-up cores are used, the mold should be poured as soon after ramming as possible, otherwise, the ram-up core will absorb enough moisture to cause blows in the finished casting.

STOP-OFF OR DROP-TAIL CORES

A stop-off core is a core used in forming comparatively small openings occurring above or below the parting of the mold. The seat portion is so shaped that the core is easily dropped in place. In addition, holes on top of or behind bosses and pads may be formed with stop-off cores.

Figure 8-14 illustrates how a core may be used as a stop-off. In the problem illustrated, the core also forms the slotted holes in the vertical leg of the casting. Thus, in this case, the core performs a dual purpose; that of a core forming a portion of the casting, and that of a stop-off to prevent metal from entering that part of the mold cavity formed by the core print. Other terms used for stop-off cores are: drop-tail, tell-tale, heel, wing or bootjack cores.

RING CORES

Often the type of pattern equipment used, and thus the molding procedure, depends upon the number of castings to be produced. For example, if a large number of castings like the pulley wheel shown in figure 8-15 is required, it would be worthwhile to make a core box and use a ring core to form the groove in the rim of the casting. A ring core is a core designed in green sand or dry sand and is used for shaping contours to the outside diameter of circular castings. It is often referred to as a mold when a double-rollover is required. On the other hand, if a limited number of these castings is required, the use of less elaborate pattern equipment may be in order.

A method for producing a grooved pulley wheel (requiring a ring core) with relatively simple pattern equipment is illustrated in figure 8-15. Parts A, B, C, D, E, F, and G illustrate

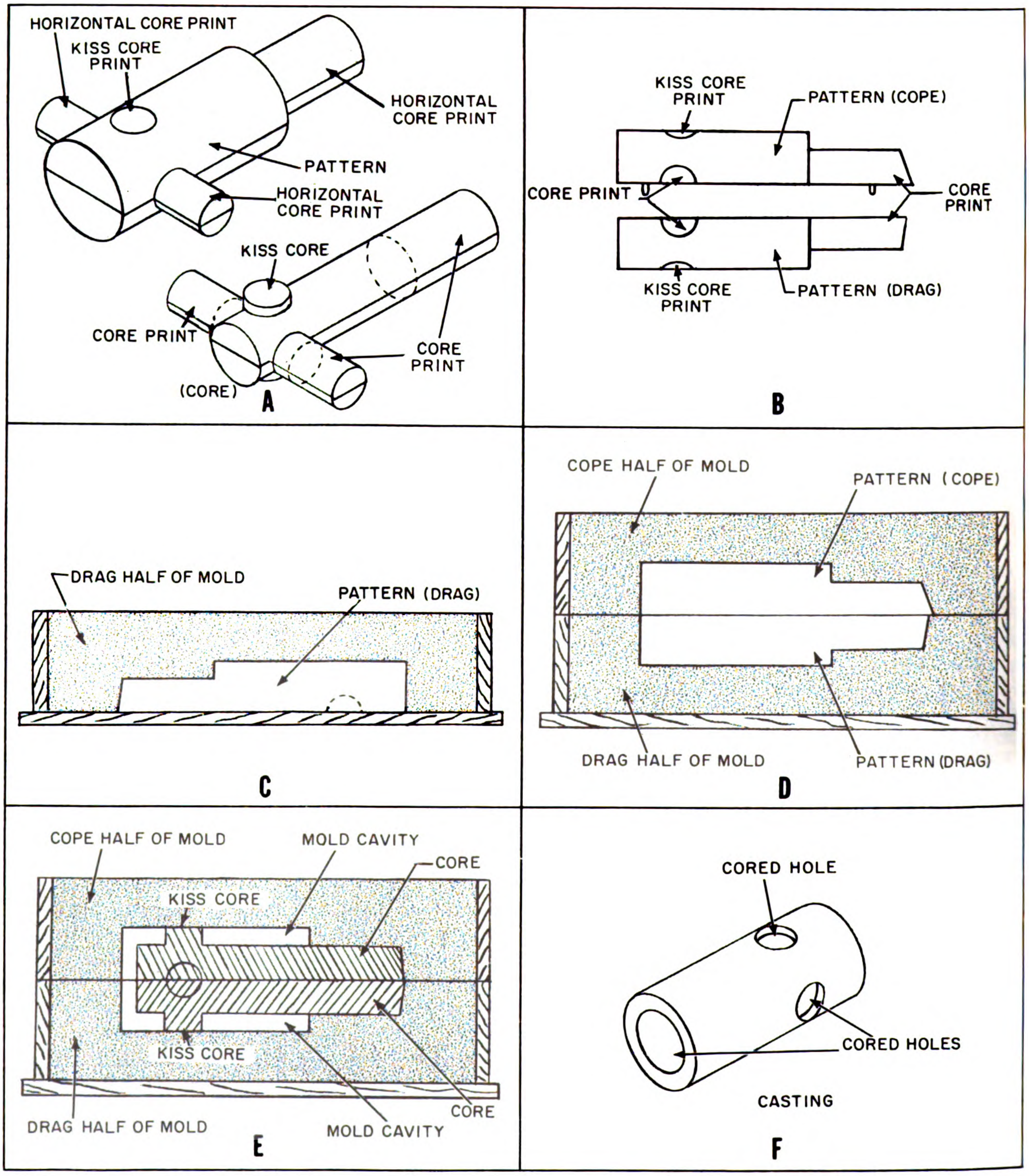

18.55

Figure 8-11.—Kiss core application—kissing through to green sand.

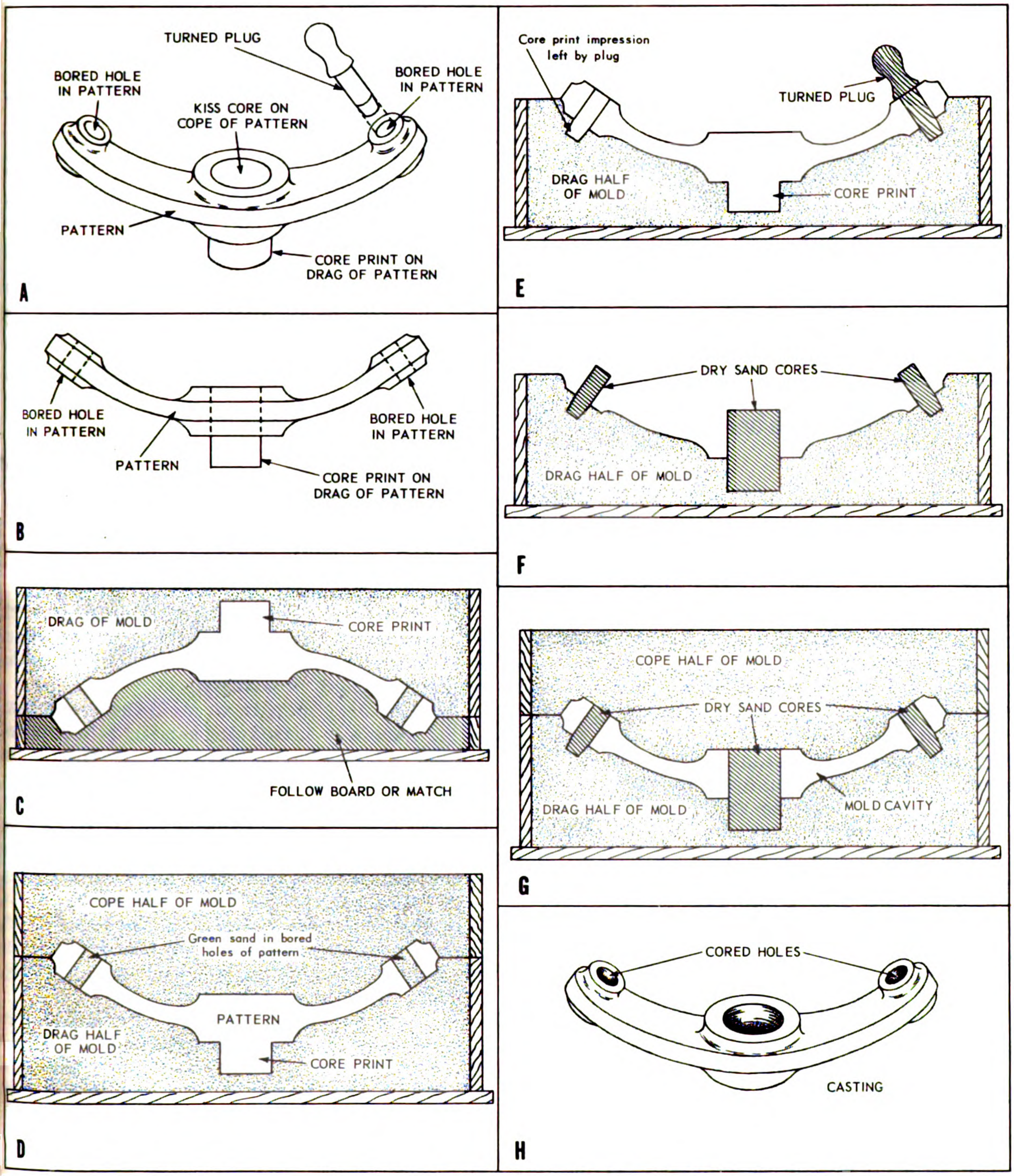

18.55

Figure 8-12.—Kiss core application—using one print and using plugged impressions.

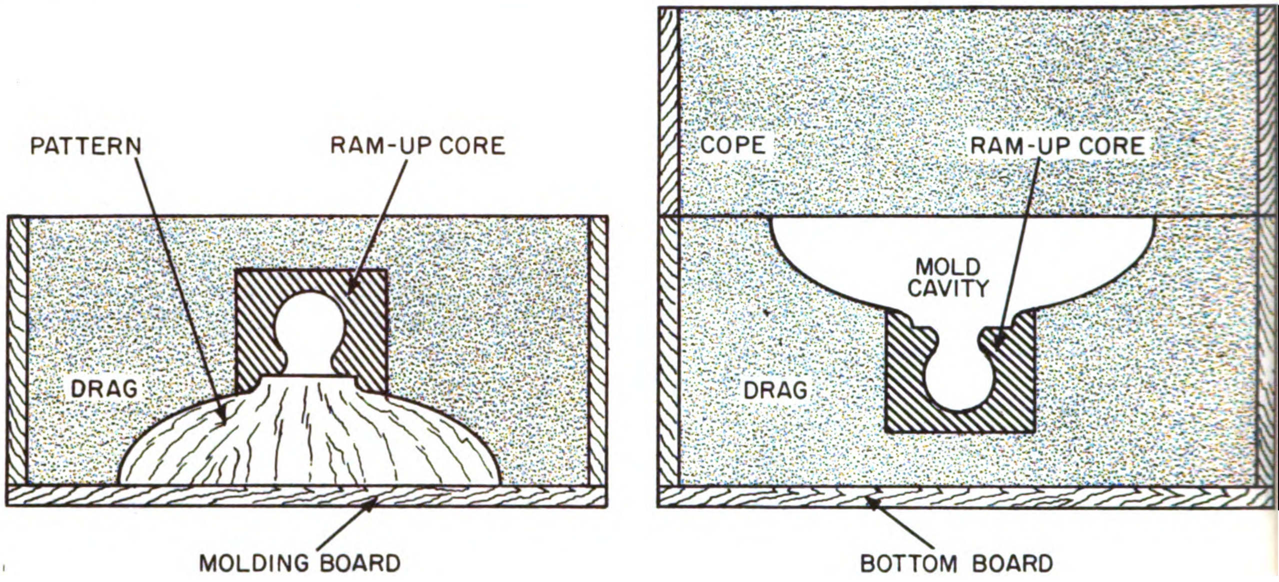

18.5

Figure 8-13. —Ram-up core application.

the steps in the production of this wheel, and part H illustrates the finished casting. (Note that in fig. 8-15 the gating system has been included because the sprue leads directly to the hub of the wheel.)

Since the procedure differs considerably from the usual method of molding we will consider it in some detail. The pulley problem illustrated has two important aspects: Making the green sand core and removing the pattern from the mold. To make the green sand core it is necessary to mold a false cheek; to remove the pattern from the mold requires a special sequence of operations. The sequence and techniques involved are as follows:

1. Place a cope flask, joint down, on a mold board and position the cope half of the parted pattern and a sprue pin in the flask. Ram the cope in the usual manner as shown in part A of figure 8-15. Place a bottom board on top of the cope and roll the flask over.

2. Next, cut the sand at the flask joint down about 30° to the tip of the groove all around the circumference of the pattern (see part B, fig. 8-15). Since the cut-down surface area will serve as a core print as well as a parting, its length must be sufficient to support the core after the pattern has been removed. Note that two-thirds of the space between the intersection of the cut-down parting line and the flask joint line and the innermost point of the groove will be a core print. Adequate core prints are always important; in this problem they are crucial.

3. After cutting down the print-parting, slick the surface area, sprinkle parting sand (parting) over the parting and place the drag portion of the pattern and flask in position.

4. The next step is to mold the green sand core. Carefully tuck facing sand into the grooved portion of the pattern. Ram the core tightly and form a parting having the same angle on the drag side of the core as that previously formed in the cope (part D, fig. 8-15). Slick this surface area and blow out any loose sand. Apply parting sand to the entire mold joint area and ram the drag.

5. Now lift off the drag (part E, fig. 8-15). Note that the core remains in the cope. Next, rap and remove the pattern from the drag. Close the mold, place a bottom board on top of the drag, and roll the entire flask over.

6. Lift off the cope (part F, fig. 8-15), then rap and draw the cope half of the pattern. Check the mold interior carefully and repair damage if required. Set the vertical dry-sand hub core and close the mold for pouring (part G, fig. 8-15).

SETUP CORES

A setup core is a simple core used to support a small core in the mold for extra bearing surface, if the small core is likely to be misaligned by sinking down in the mold. A setup

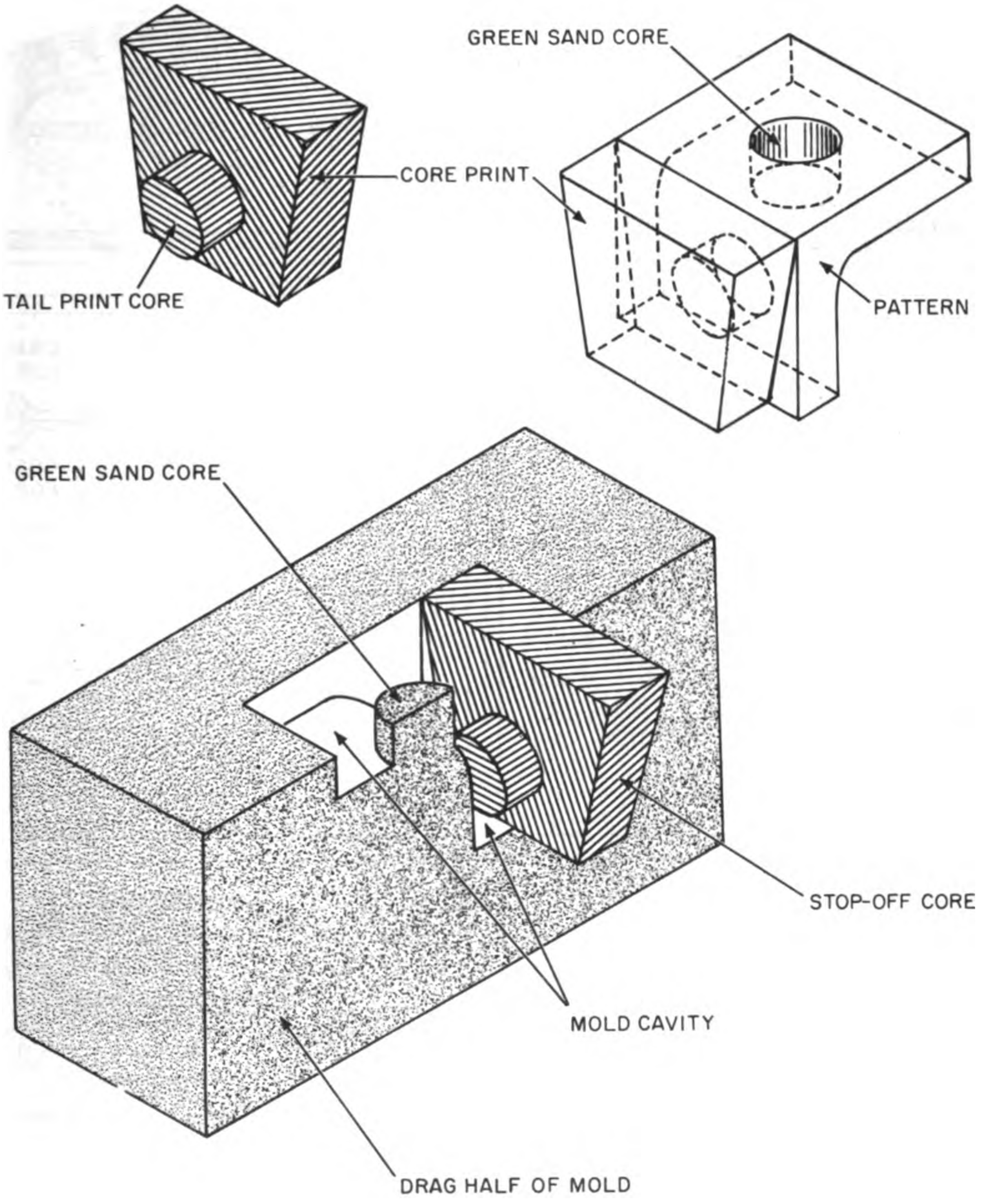

18.57

Figure 8-14.—Stop-off or drop-tail core application.

core may also be designed to form a boss on the end of a casting or to form a seat for other cores. It may be designed to be used as a ram-up core.

The core print cavity is usually formed in the mold by a core print on the pattern. However, if a small print on a heavy core provides an inadequate support in the mold, it may be necessary to provide additional support for the small core. A brick may be rammed up in the mold under the core print to provide this extra support, or a special core may be designed to form the seat for the small core. Such a core, called a SETUP core, is placed under the small core print and used as a ram-up core.

A method of producing a casting using this technique is illustrated in figure 8-16. Part A of this illustration is an isometric view of the

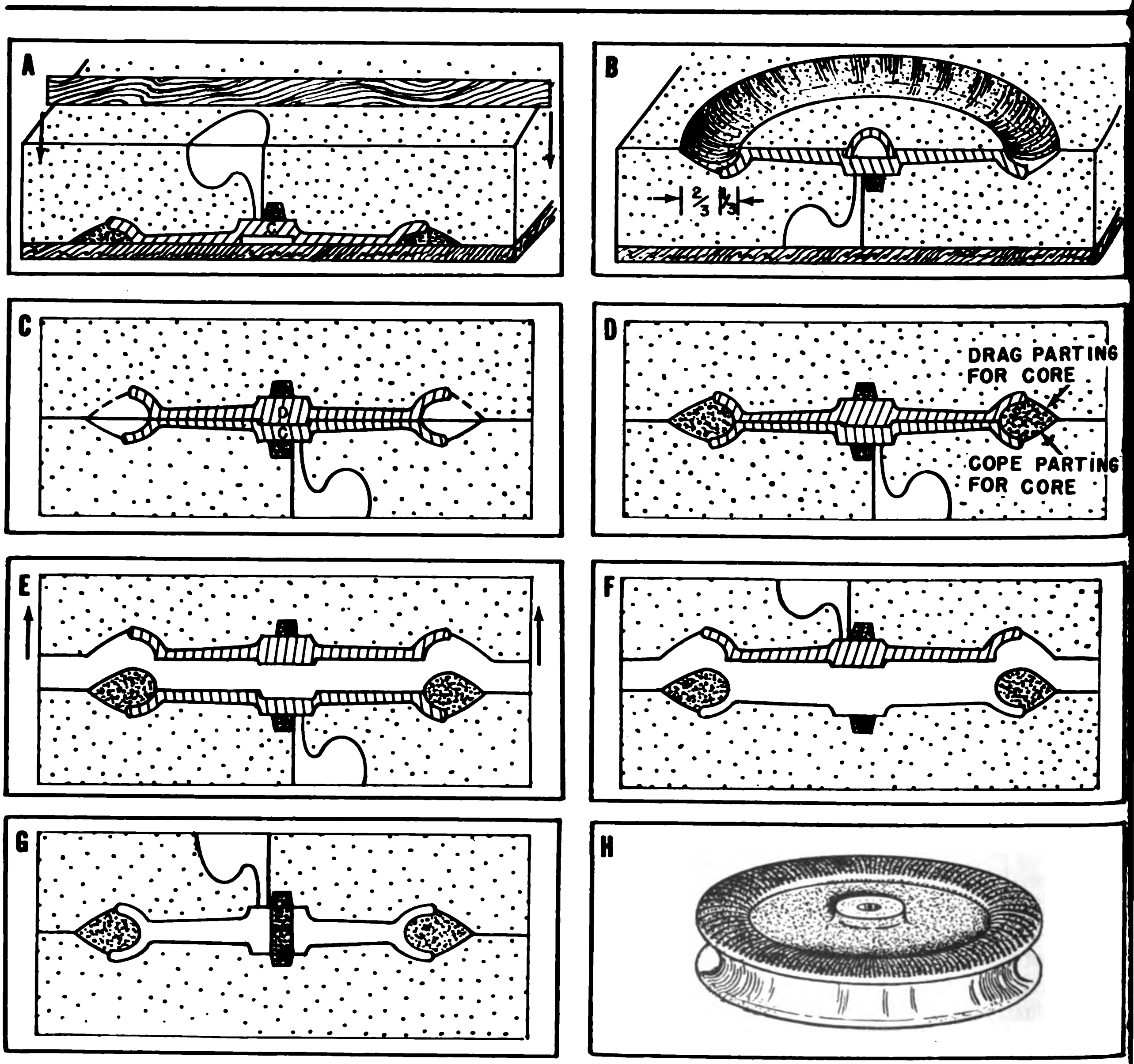

18.46

Figure 8-15.—Ring core application.

pattern, the main body core, and the setup core; parts B, C, and D illustrate steps in the production of this casting; and part E illustrates the finished casting. (The gating system is not shown in fig. 8-16.)

If a number of small core prints project from the end of a pattern or core assembly, a setup core may be designed to incorporate all of the core prints into one core. This setup core may be pasted to the main body core or core assembly and the complete core set into the mold as a complete unit.

If a small core print is used for a hole in a boss on the end of a casting, a setup core may be designed to combine the core print and the boss into one core.

The method of producing a casting requiring a setup core to include a boss on the end of a casting is illustrated in figure 8-17. Part A of this illustration is an isometric view of the pattern, the main body core, and the setup core; parts B, C, and D illustrate the steps in the production of this casting; and part E illustrates the finished casting. (The gating system is not shown in fig. 8-17.)

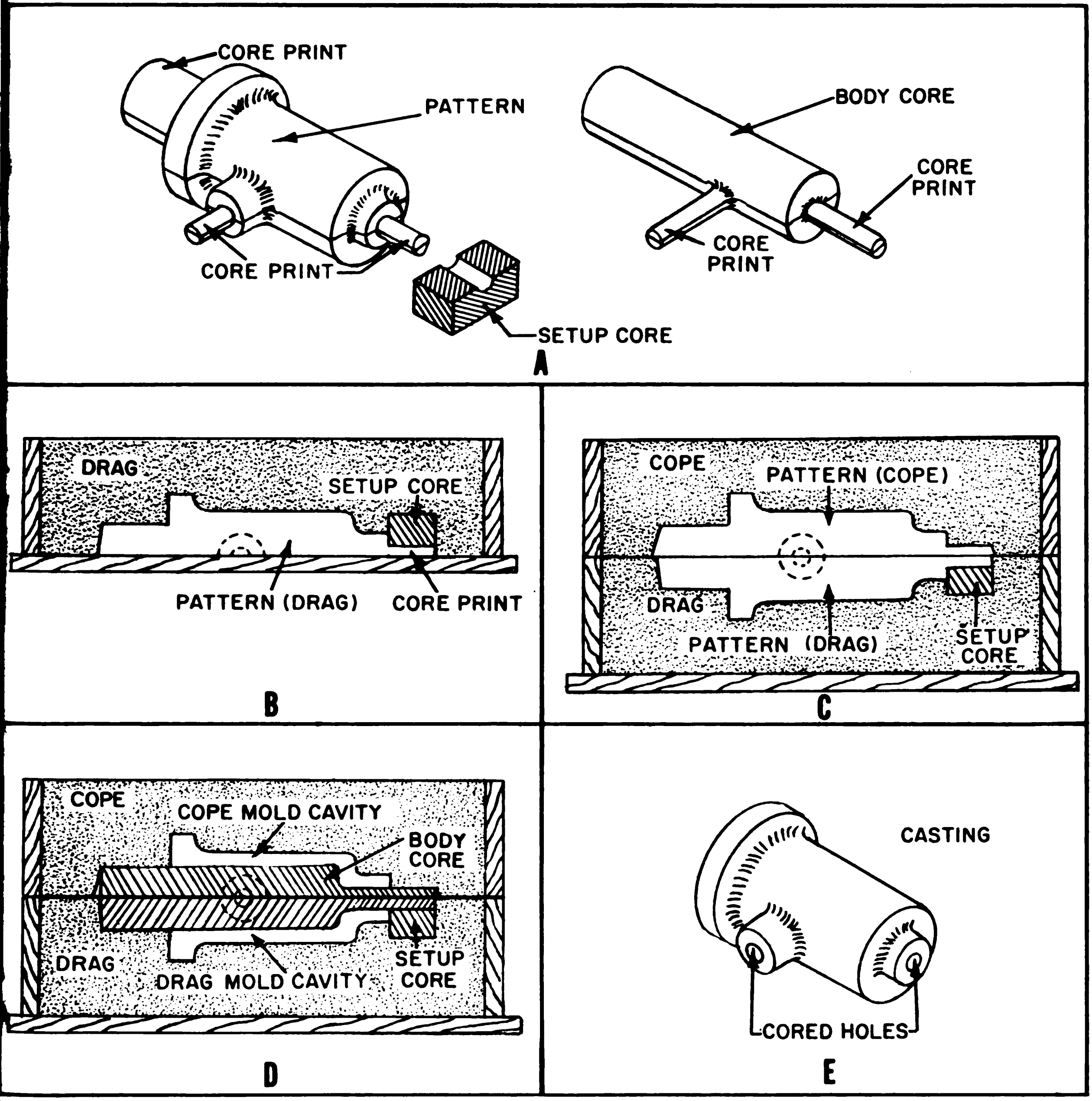

68.113

Figure 8-16.—Application of a setup core—as a simple core support.

SPECIAL GATING SYSTEM CORES

The means whereby the molten metal is introduced into the mold, and a knowledge of what will happen when the molten metal follows a prescribed path as it enters the mold, are factors of primary importance in the production of a casting. A gating system plays an important part in dimensional casting control and must be designed to do the following:

1. Permit the complete filling of the mold cavity.
2. Introduce the molten metal into the mold with as little turbulence as possible to eliminate any gas pickup and to prevent mold erosion.
3. Regulate the rate of flow of metal into the mold cavity.

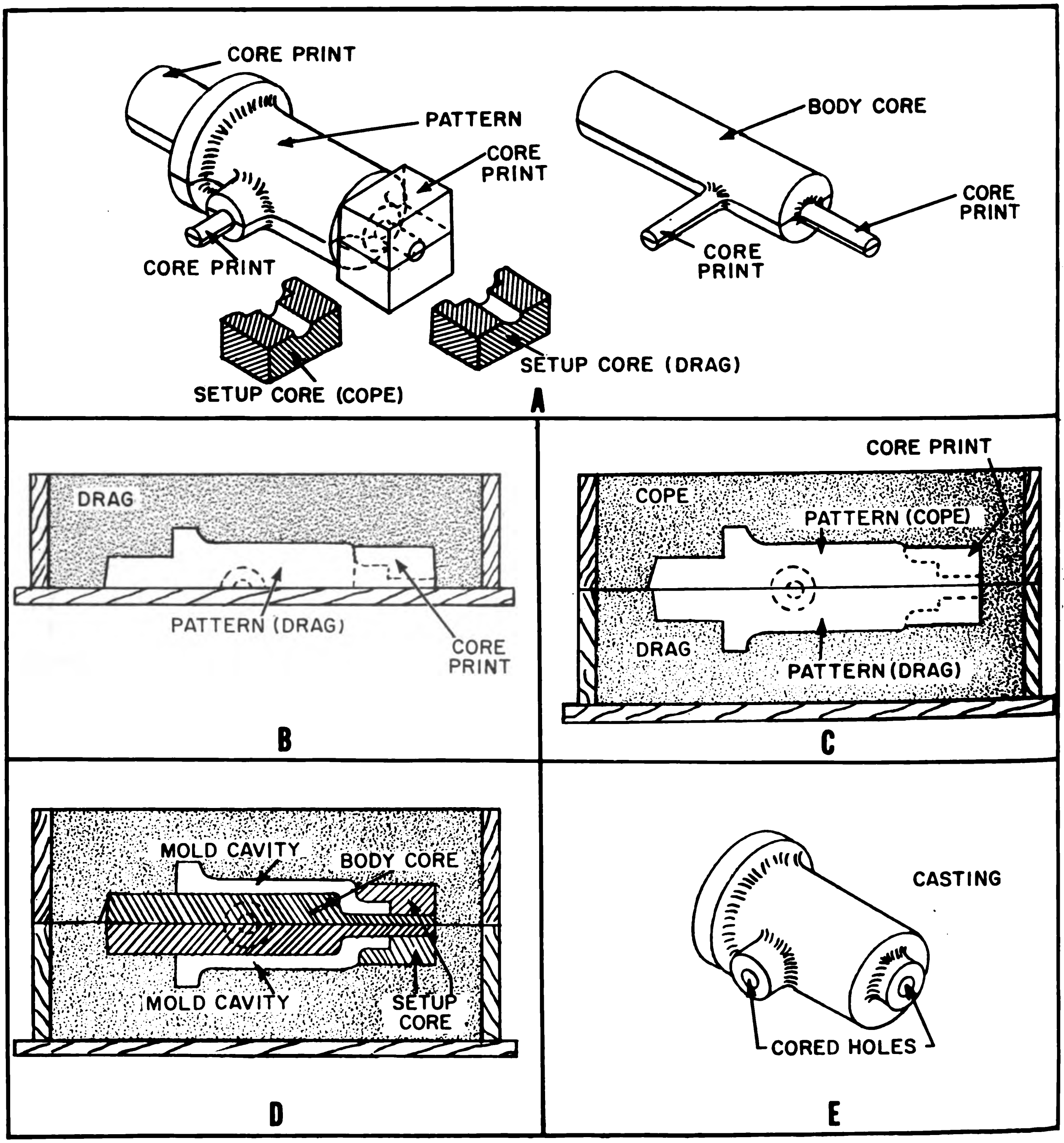

68.11

Figure 8-17.—Application of a setup core—as an aid for exterior surfaces.

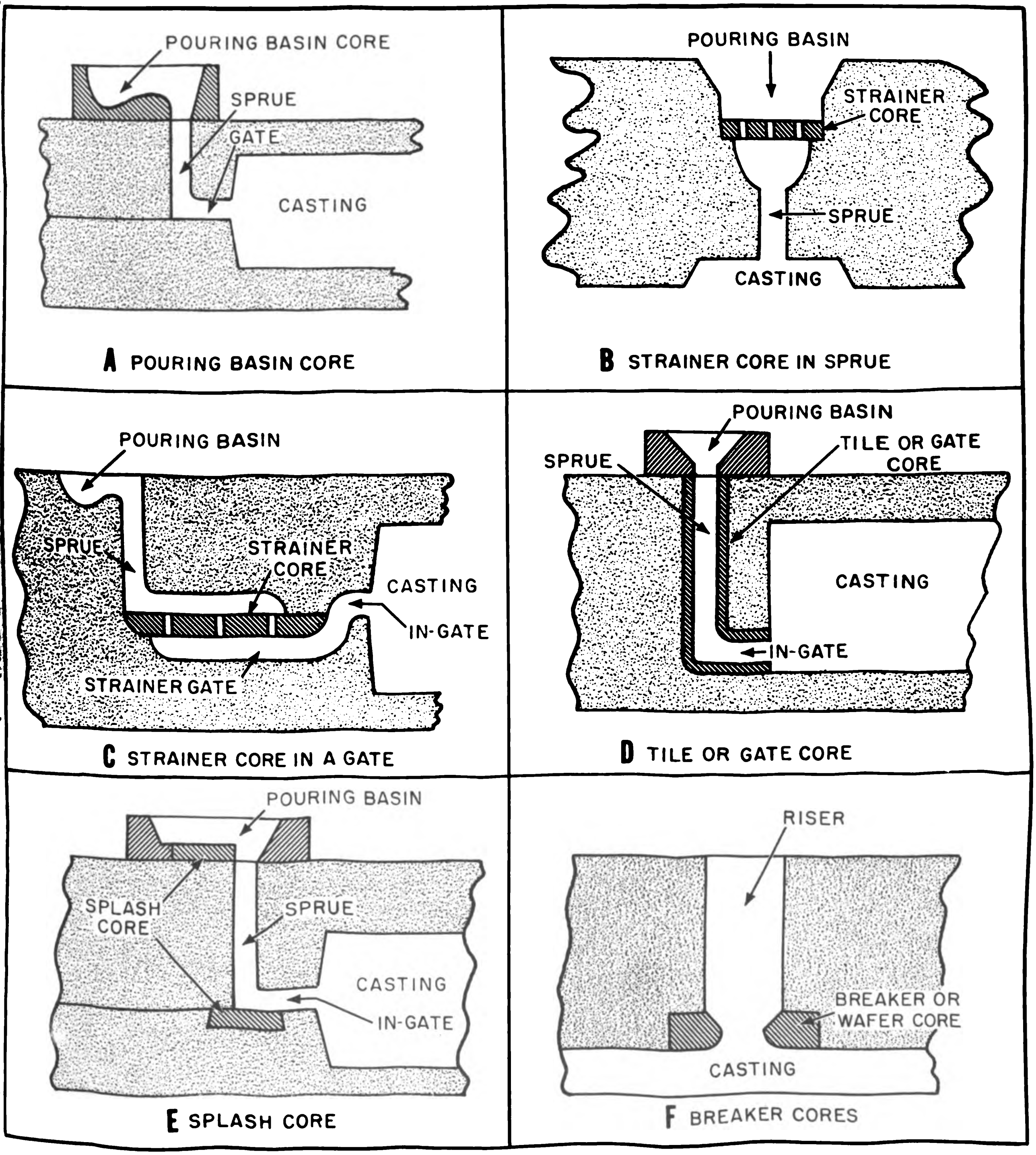

A POURING BASIN CORE

B STRAINER CORE IN SPRUE

C STRAINER CORE IN A GATE

D TILE OR GATE CORE

E SPLASH CORE

F BREAKER CORES

68.115

Figure 8-18.—Application of gating system cores.

Special gating cores such as pouring basin cores, strainer cores, tile or gate cores, splash cores, and breaker cores may be used in conjunction with the general gating system in controlling the molten metal while it is being poured into the mold cavity. Applications of special gating cores are illustrated in figure 8-18 and are self-explanatory. Definitions of special gating system cores are:

1. POURING BASIN CORE—A core used for a cavity on the top of the cope into which metal is poured before it enters the sprue. (See part A of fig. 8-18.)
2. STRAINER CORE—A small perforated core in the sprue, runner, or gate to prevent entrance of slag and other extraneous material into the mold cavity. (See parts B and C of fig. 8-18.)
3. TILE OR GATE CORE—Preformed cores made of a refractory material such as tile, ceramic, or dry sand that are placed in a mold to replace a cut or formed (pattern) gating system. (See part D of fig. 8-18.)
4. SPLASH CORES—Inserted refractory material placed in the pouring basin or at the bottom of the sprue to eliminate erosion caused by the sudden drop or rolling action of flowing metal. (See part E of fig. 8-18.)
5. BREAKER CORE—Cores designed for the purpose of easy removal of risers from castings. Breaker cores are set in position over the contact area of the neck under an open riser, creating a necking effect. (See part F of fig. 8-18.) Other terms used for breaker cores are wafer cores and Washburn cores.

CHAPTER 9

COREMAKING

Coremaking is closely related to the production of a mold because a core actually becomes a part of the mold prior to the pouring of the molten metal. The process of making cores differs from the process of making the mold, in that the core sand is not rammed over and around a pattern. Instead, the core is shaped to the casting's requirements in a negative (hollow) pattern called a core box.

Not only is the Molder required to know the properties and the characteristics of cores (see chapter 8), but he also must be able to select the proper material to produce these properties and characteristics. This chapter describes core materials, core sand mixtures (green sand, baked or dry sand, green-topped, CO_2, and shell), coremaking equipment, and the proper coremaking techniques.

To produce a satisfactory core, you should give careful attention to the same factors that are important in the making of the mold: selection of the proper material, the right use of your equipment, and the employment of correct coremaking techniques. Careless or haphazard performance of any step in the coremaking procedure can result in the production of a defective casting.

CORE MATERIALS

The properties of a core are of a physical nature developed by the Molder to meet the casting's requirements for a particular metal or alloy and mold. The properties and the characteristics of any core depend primarily upon the knowledge of the Molder, the proper selection of the core materials to create these properties and characteristics, and the proper method of baking or drying prior to the setting of the core.

CORE SANDS

Silicon dioxide, in the form of disintegrated quartz rock, is a loose material consisting of small but easily distinguishable particles used as the basis for core sand. To be called sand, the fine particles (grains) must be smaller than gravel (less than 2 millimeters in diameter), and larger than the particles that make up silt (1/16 millimeter in diameter). The particles that form sand originated from the disintegration of granite and quartz rock.

Granite and quartz rock at one time covered a large portion of the earth and were broken up by acts of nature such as ice, frost, erosion, wind, and water. These broken-up rock formations were then deposited in many parts of the world, either on the surface, under water, or as sub-surface deposits. Surface sand deposits are sands which have been moved to seashores by wave action, dried in the sun, and blown by the winds to be deposited as dunes and beaches. Underwater deposits are those sand deposits which lie in river, lake, or seashore bottoms. Sub-surface deposits are those which are near the surface of the ground and must be mined.

Silicon (Si), one of the most abundant forms of solid matter, when combined with oxygen (O_2) forms an oxide known as silicon dioxide (SiO_2). Silicon dioxide may occur in a variety of forms, of which silica sand is the most common. Silica sand consists of finely ground crystalline rock, chiefly quartz, and is a stable, hard substance which resists metal penetration and has a very high melting point. Therefore, the silica sands have the ideal properties and characteristics required of a core sand.

To obtain the most satisfactory sands for cores, attention must be given to the cleanliness of the sand, the shape of the sand grains, and the grain distribution. Sands with a minimum of clay content and foreign matter are usually preferred because the presence of the extra fine particles (fines) causes lowering of the permeability characteristic of the core as well as of the bonding effect of the core oils used for a binder. Sands with grains of angular shape are not as satisfactory for cores as those sands that are chiefly composed of round grains. Angular grains require more core binder than round grains, resulting in a lowering of the permeability value of the core. Round grains have a smaller surface area than do angular grains, which results in a thicker coating of core oil on each grain; thereby creating a core with a higher baked strength.

The grain distribution of any core sand is an important factor, related to the amount of binders and other materials that must be added to the sand to obtain satisfactory results. The smaller the grain size used in the making of the core, the smoother will be the surface(s) of the casting that is in contact with the molten metal. The larger the grain size, the greater the permeability qualities or the venting of the core will be.

The essential properties and characteristics that should be considered for any core are the same as those listed for molding sands. (See chapters 6 and 8 of this training course.)

CORE BINDERS

Core binders, either organic (derived from a living source) or inorganic (derived from a nonliving source), belong to two different groups, known as wet and dry. Bentonite, corn flour, resin, silica flour, and woodflour are in the group of dry binders. Molasses, linseed oil, and manufactured core oils are in the group of wet binders. The two groups (wet and dry) of binders may be subdivided into four distinctive classes as follows:

1. Binders that become firm upon freezing, such as water and other liquids that will freeze and bind the grains into a solid mass.
2. Binders that become firm at room temperature, such as chemical cement, portland cement, and sodium silicate.
3. Binders that become firm upon the application of heat during baking, such as linseed oil, molasses, resins, cereal binders, and manufactured core oils. Class three binders may further be subdivided into three separate types:
    (a) those binders which harden by heat,
    (b) those binders which harden upon cooling after the application of heat, and
    (c) those binders which adhere to the grains upon heating.
4. Clays such as bentonite, fireclay, woodflour, and silica flour.

Regardless of the group, class, or type of binder used in the preparation of the core sand mixture, all binders must meet the following requirements for a particular use or casting condition.

1. The binder must have sufficient strength for the intended use.
2. The binder must have sufficient strength to hold the core together under the pressure and the eroding action of the molten metal and still collapse during the proper solidification range to eliminate casting strains.
3. The binder must generate a minimum of gases.
4. The binder must have sufficient strength in the green state to hold the core together prior to baking or drying.
5. The binder must have sufficient strength to enable storage of a core.
6. The binder must have sufficient strength so as not to allow distortion during baking or drying.
7. The binder must not absorb moisture from the mold.
8. A binder must be capable of being distributed throughout the mixture with the least amount of mixing.

The bonding agents used in cores are primarily corn flour, dextrine, raw linseed oil, and commercial core oils. The cereal binders (corn flour and dextrine) are rarely used by themselves; but when used in combination with core oils they produce the required strength in a core. Corn flour gives the core green strength, and helps to hold the core in shape until it is baked. Small amounts of dextrine, used in combination with other binders, increase the strength of a baked core. Dextrine-bonded cores should be used as soon as possible, since if they are stored for any great length of time they absorb moisture from the air.

Sometimes woodflour or silica flour are added to a core mixture, in order to obtain certain properties. Woodflour is used as a filler, not a binder; its function is to soften or weaken a core to improve collapsibility. The addition of silica flour protects the core from metal penetration and erosion by the molten metal. Be careful in adding silica flour, for its excessive use can result in hot tears, because of too high a hot strength.

Since you will not be able to test core collapsibility with the sand testing equipment available aboard ship, you will have to rely upon close observation during the shaking out, to determine this property. If the sand is still hard during shakeout, it lacks collapsibility. Cracks occurring in the cored area of the casting indicate that the sand mixture was too strong at high temperatures. Subsequent mixes can be corrected by adding about 2 percent of woodflour.

The type of binder used is important not only from the viewpoint of strength, but also from the viewpoint of gas-generating properties. A linseed oil compound, for example, is preferable to a pitch-oil compound, since the gas generation of the former decreases at a more rapid rate, and the possibility of casting defects due to core gas is accordingly lessened.

Several binders can be used together to obtain a better overall combination of green strength, baked strength, and hot strength than would be possible with a single binder. When core oil and a cereal binder are used together, the cereal binder contributes most of the green strength, and the core oil contributes most of the baked strength; the strength obtained from this combination is higher than the total strengths of the individual binders.

In general, the advantages of cereal binders are: (1) good green strength, (2) good dry bond, (3) effectiveness in angular grain sand, (4) core oil not absorbed, as in natural bonded sands, (5) quick drying, and (6) fast and complete burnout.

Core oils are used to provide a strong, hard core after baking. Their advantages over other types of binders are: (1) ability to coat the individual sand grains evenly, with a satisfactory amount of mixing, (2) generate a small amount of smoke and gas, (3) work clean in the core boxes, and (4) give the cores good strength. See table 9-1 for the commonly used binders for core sand mixtures.

SUBSTITUTE MATERIALS

Situations sometimes arise in which it is impossible to obtain standard core materials for a job, and substitute sand or binder must be used. For example, if new washed silica sand is not available for a facing sand, you can use a reclaimed backing sand, properly bonded. A fine building sand, or beach or dune sand that is relatively free from feldspar or crustaceous matter, is sometimes satisfactory. Another source is sand composed of pieces of coral and snail shells broken up by the action of the waves.

If bentonite is not available as a binder, you can use fireclay; another possibility is the use of a natural bonded sand containing clay. Ordinary wheat flour can be used in place of corn flour, and sugar or molasses in place of dextrine.

Molasses and pitch are two materials that you can easily obtain. Molasses for a core mixture should be mixed with water, to form a thin solution known as molasses water, and added as part of the temper water during the mulling operation. Pitch used with dextrine imparts good strength to a core, but is seldom used alone. The addition of a small amount of sea coal will prevent the pitch from rehardening as it cools from the high temperatures caused by the molten metal.

Any use of substitute materials, however, should be made only as an emergency measure. When substitutes are used, take every care to ensure that clay and organic materials are held to a minimum amount, and that the mixture is composed of a maximum amount of good, clean sand.

COREMAKING EQUIPMENT

The handtools discussed in chapter 3, the sand mixing equipment discussed in chapter 4, and the preparation of foundry sands discussed in chapter 6 of this training course also apply to making cores. However, there are certain additional devices that are necessary for the production of a satisfactory core. These extra devices are core boxes, core plates, core ovens, internal supports (arbors) and core driers.

CORE BOXES

Core boxes are the final product as far as the Patternmaker is concerned. To the Molder, they provide a means to an end just like any other tool or piece of shop equipment. Nevertheless, core boxes are highly desirable pieces of shop equipment. Why? Cores made from core boxes have smoother surface characteristics, greater dimensional accuracy, and better resistance to the cutting or eroding action of the molten metal than do cores made by any other method.

Although naval shipyards and production foundries frequently use metal core boxes, shipboard foundries use wooden core boxes. The reason for this is that a particular shaped core

Table 9-1.—Common Binders Used in Core Sand Mixtures.

Name	Type of Binder	Origin and Use
Bentonite	Inorganic	Derived from nonliving sources. Gives green strength to core sand.
Corn flour	Organic	Derived from corn. Used to improve sand texture and collapsibility. Slightly improves green strength.
Dextrine	Organic	Derived from corn starch. Used to improve surface hardness and slightly increases green and dry strength.
Linseed oil	Organic	Derived from flax seed. Imparts dry strength to the core.
Molasses	Organic	Derived from sugar. Imparts dry strength to the core but with less efficiency than linseed oil.
Resin	Organic	Derived from gums of trees or manufactured synthetically. Soluble in most organic solvents. Used for adhesiveness.
Rosin	Organic	Residue left from turpentine distilling. Used for aluminum castings when good collapsibility is necessary.
Silica flour	Inorganic	Derived from silica sand ground into a fine powder. Used to close the grains and make a core dense. Enables the core to resist metal penetration and increases refactoriness.
Woodflour	Organic	Derived from wood ground into a fine powder. Used as a filler for aluminum core work. Increases collapsibility.

is so seldom required that the time, effort, and expense involved in the making of a metal core box is not justified.

Core boxes, like patterns, are constructed in many ways. The simplest is the one-piece dump box. (A box of this type will be used later in this chapter to illustrate the fundamental coremaking techniques.) Other core boxes involve two, three, or more parts; many incorporate loose pieces; and some are so constructed that two or more cores may be rammed at one time. (See fig. 9-1.) Some of the more common types of core boxes are discussed in the following paragraphs.

Do not assume that these are the only types of core boxes or confuse the methods of construction with the type of box, although the method of construction may determine the type of core box. For example, skeleton constructed core boxes are called skeleton core boxes. For detailed information on the methods of construction, consult the Patternmaker.

1. The DUMP BOX is one which has four sides and a bottom and is open only on the face. Sand is rammed into the open face and the box is turned over onto a core plate. The core box is lifted off, leaving the core on the plate. If any loose pieces are used they will dump out with the core. (See fig. 9-2.)

2. A COLLAPSIBLE CORE BOX is similar to a dump box except that the four sides and bottom may be disassembled. After sand is rammed into the open face, the box is turned over onto the core plate. The collapsible box is used when back draft prevents the dumping of the core out of the box. Instead, the sides and bottom of the box are disassembled and pulled away from the core. (See fig. 9-3.)

3. An OPEN END BOX is, as the name implies, open on the ends. The box is set up vertically so that one end is in contact with the core plate. Sand is rammed into the other open end at the top. The box is pulled away leaving the solid core standing on end. The open end box is usually made in parted halves as shown in figure 9-4.

4. A GANG BOX is usually an open end box used for making several cores at one time for mass production work. (See fig. 9-5.)

CORE PLATES AND DRIERS

The function of a core plate is similar to that of a mold board or follow board, in that it prevents the rammed sand from spilling when the

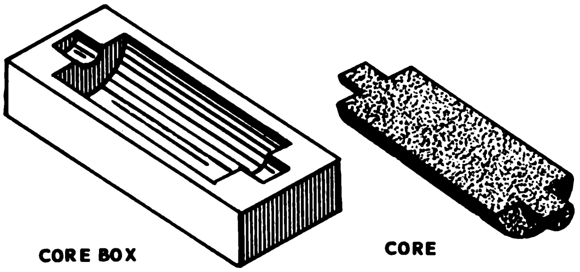

ONE-PIECE CORE BOX

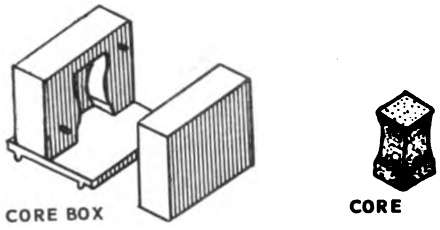

TWO-PIECE CORE BOX

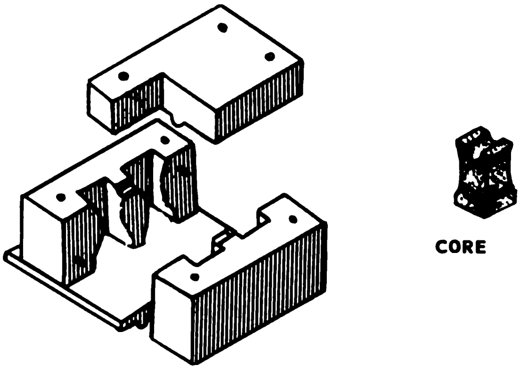

THREE-PIECE CORE BOX

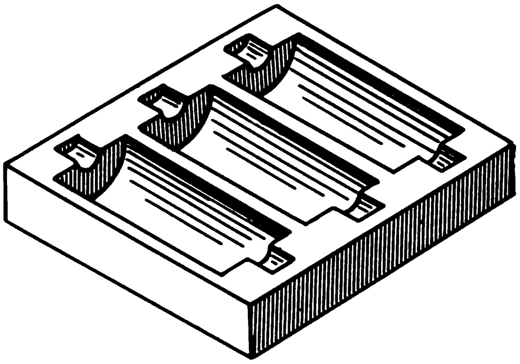

GANG CORE BOX

102.80

Figure 9-1.—Simple core boxes.

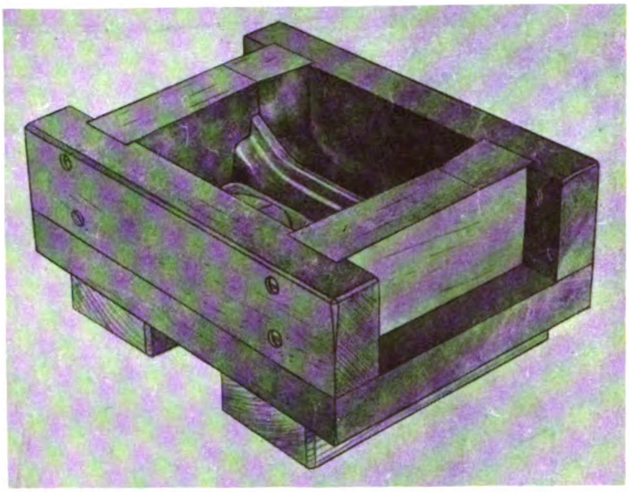

68.116

Figure 9-2.—A dump box.

core box or container is rolled over. It is also used to support the core during baking. In the shipboard foundry, core plates will probably be available in a variety of materials (aluminum, asbestos, cast iron, steel) and in a number of different sizes.

The perforations in a core plate facilitate the baking of baked cores, and the drying of green sand cores. The surface must be perfectly straight, or the baked core will be distorted. It must be clean, also, for any foreign matter will bake onto the core.

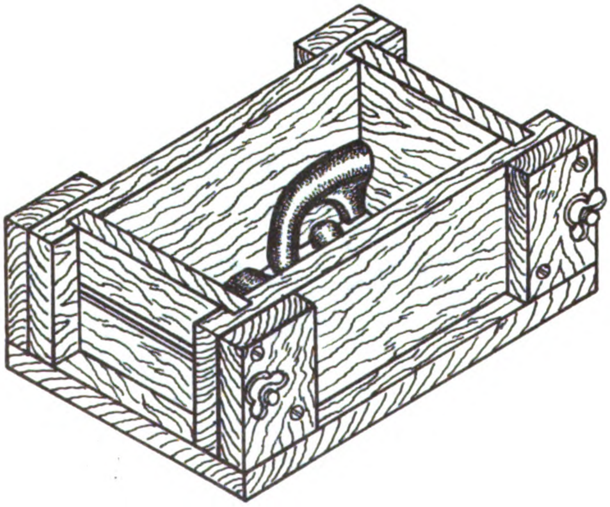

68.117

Figure 9-3. — Collapsible core box.

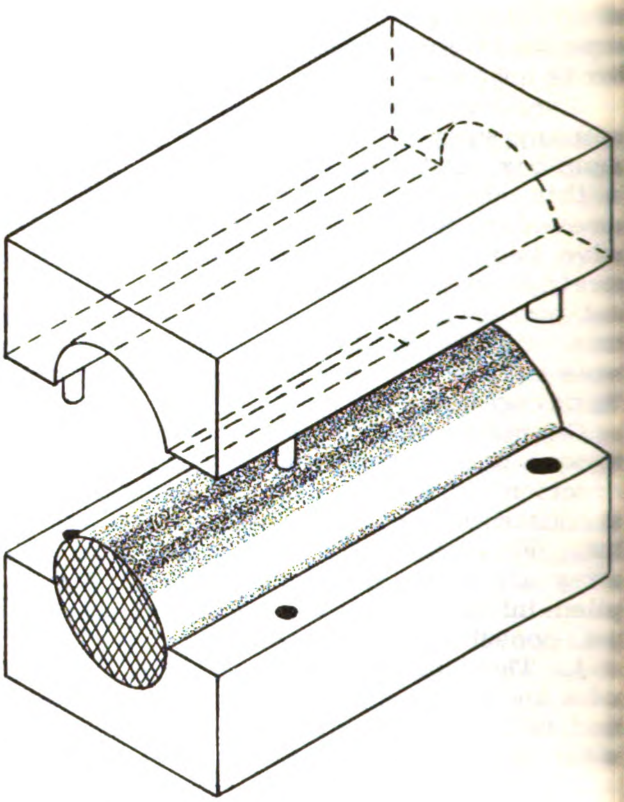

68.118

Figure 9-4.—An open end box.

When a core has a tendency to sag before or during baking, it may be necessary to give the core additional support to eliminate serious parting problems. For short run jobs, cores may be supported in a bed of loose green sand or silica sand which can be brushed off the core

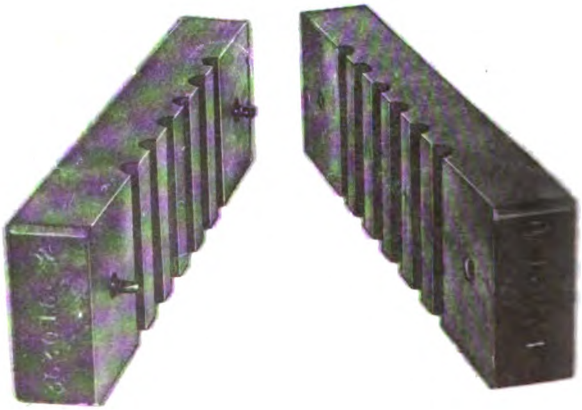

68.119

Figure 9-5.—A gang box.

after baking. When parting problems are encountered, temporary drying frames or bedding boxes should be provided.

For a large number of cores of a complicated design, the Patternmaker may include special flasks or supports called core driers with the pattern equipment. These driers are usually made to conform to the contour and shape of the individual core, thus maintaining the true shape during baking. Core driers are designed with thin walls to reduce heat absorption, and are reinforced with ribs to withstand warpage caused by sudden temperature changes. The design and construction of a core drier is as important as the design and construction of the core box itself.

In core drier design, the basic requirement is rigidity. As a drier is handled many times, lightness is also an important factor; therefore, all excess material should be removed wherever practicable. The design should include holes, perforations, windows, and relief of certain dimensions to produce proper heat circulation around the core during baking. The design of the drier is such that only those core surfaces where support is necessary are supported.

CORE OVENS

In Navy foundries, the core ovens are electrically heated, shelf-type ovens, with vertically hung doors. They are provided with double walls, and the space between the walls is filled with high-grade thermal insulating material. This insulation serves to keep heat loss to a minimum.

These ovens are fitted with brackets arranged on 6-inch centers, so that the perforated shelves can be adjusted to accommodate various sizes of cores. Maximum shelf load will depend upon the size of the oven; in general, a shelf should be capable of supporting a load of 1/2 psi.

Heat is provided by means of electric resistance units, and a system of ducts and blowers makes it possible to recirculate the heating chamber's hot air. Fresh air can be taken into the air-mixing chamber of this recirculating system by opening and closing dampers.

Adjusting the temperature-control devices located on a control panel makes it possible to set and maintain oven temperature anywhere between 200° F and 650° F. Actual temperature of the oven is indicated on a dial-type indicator calibrated in degrees Fahrenheit. A record of temperatures over a period of time can be recorded on a strip chart (marked in ° F), by means of a pen connected to the indicator.

The heater-unit power circuit must be opened if it becomes necessary to open the core oven door while cores are being baked. The newer core ovens are equipped with devices for doing this automatically. A cutoff switch opens the power circuit whenever the door is opened; and an explosion relief hatch automatically releases (permitting the door to open) whenever gas pressure in the oven exceeds a predetermined psi value.

Since equipment differs somewhat from one shop to another, you should make a practice of studying the details of available equipment from the technical manuals furnished by the manufacturer. If possible, get an experienced man in the foundry to instruct you on the correct and safe operational procedures.

CORE INTERNAL SUPPORTS

Internal support is given to large cores, and to those cores of intricate shape, by the use of rods and arbors. In some instances, devices for lifting and handling the core may also be necessary. Internal support is obtained through the use of wire rods and arbors. Lifting hooks are frequently attached to the core's internal supporting framework to facilitate the handling of large cores.

RODS and ARBORS serve an identical purpose in coremaking; that is, both provide support against twisting, bending, and breaking while the core is being handled or while the casting is being poured. Rods from 1/8 to 3/8 inch in diameter are used to provide support in smaller cores, while arbors are usually necessary in medium- and large-sized cores. Core rods are bent to the desired shape by hand. Arbors are formed by pouring molten metal into open sand in which the shape of the arbor has been molded. A typical arbor for a medium-sized core is illustrated in figure 9-6.

Arbors are seldom necessary in the cores produced in the Navy's shipboard foundries. But only the simplest of cores may be constructed without rodding. Effective rodding often involves more than just laying rods loosely in the body of the core. Occasionally a framework of rods, similar to that shown at B, figure 9-7, is wired together. This technique is essential for cores that require lifting eyes or hooks to facilitate handling. In the example given, lifting

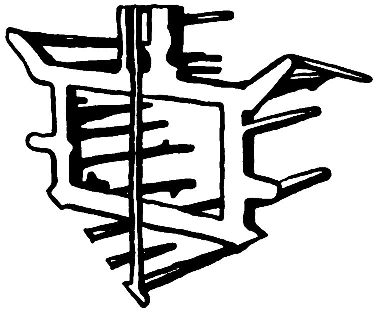

102.81
Figure 9-6.—A typical core arbor.

devices (C, fig. 9-7), if required, are secured to the corners, which are the strongest portions of the frame.

RODS may be used to strengthen the core in a number of ways. Each core presents a special problem and must be considered on its own merits. Just as deep draws must be staggered in the cope and cheeks of a mold, so must similar parts of the core be rodded. Part A of figure 9-7 illustrates a few of the various ways in which it may be necessary to bend rods for different kinds of core shapes.

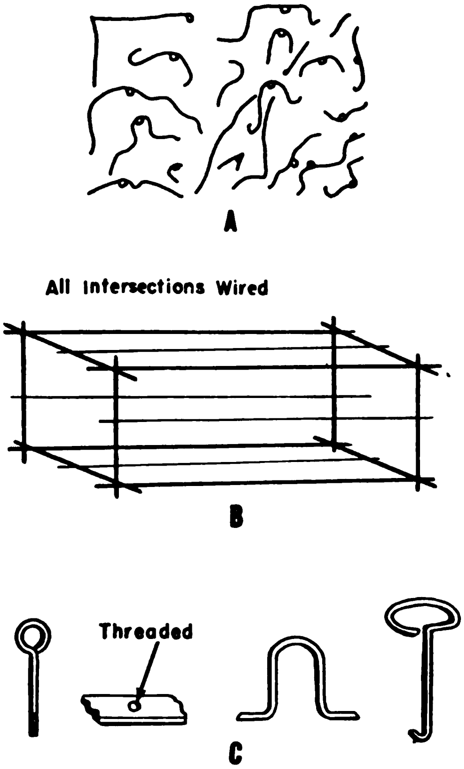

102.82X
Figure 9-7. — Rodding and lifting devices for cores.

CORE SAND MIXTURES

Manual mixing of core sands is unsatisfactory, because many of the binders are added in small amounts and it therefore requires a very thorough mixing operation to distribute the binder uniformly through the sand. To obtain maximum advantage from the binders, you must mix core sands in a muller or similar type of mechanical mixer. If you use a shovel for mixing the sand, you will have to add a greater amount of binder to obtain the desired properties, and the results may not be consistent throughout the sand.

In preparing core sands, set the muller in operation and then proceed as follows: (1) put in the sand, (2) add the dry ingredients, (3) run the mixture dry for a short space of time, (4) add the liquids, and (5) continue to mix for the required period of time. Mulling time has the same effect on core sand as on molding sand—lengthening the mulling time beyond 5 or 6 minutes does not add to green strength, as the green strength increases rapidly for the first 2 minutes or so of mulling, but then levels off. With experience, you will be able to determine the proper mulling time for each individual mix.

Laboratory tests indicate that more consistent properties are obtained when you add core oil, and mix it with the sand, before you add water. When you use cereal binder, do not mix the batch for too long a time before you add the liquids. Excessive mixing of sand and cereal binder without the liquid additions makes the batch sticky, and a longer time will be needed to bring the core mix to a satisfactory condition.

Various core sand mixtures that may be used for green sand cores, baked or dried sand cores, green-topped cores, carbon dioxide (CO_2) cores, and shell cores are discussed in the following paragraphs. Remember, that the core mixtures given here are used merely as a guide to obtain satisfactory cores for shipboard foundries.

GREEN SAND CORE MIXTURE

A suitable green sand core mixture may be obtained by slightly modifying the basic formula for all-purpose (synthetic) sand. (See chapter 5.) The percentage of dextrine, cornstarch, and the total moisture is increased; the dry, washed silica sand is decreased; while the bentonite percentage remains the same.

Material	Weight or Percentage
Washed silica sand (dry)	95.0
Bentonite	3.0
Dextrine	1.5
Cornstarch	0.5
Moisture (total by test, after mulling)	4.0

(Note: a pint of water weighs approximately 1 pound.)

Before adding the moisture to the green sand mixture, the core sand and the dry ingredients should be given a brief but thorough mulling.

In a green sand mixture, the dextrine causes the core's surface to harden without baking. Core strength is accomplished through hard ramming and the use of reinforcing rods and arbors. This mixture should be rammed to a high degree of hardness and allowed to air dry for 1 1/2 hours or more. At the end of this time the cores may be handled, if care is used, and if the core shape has been properly reinforced. Green sand cores are excellent for preventing hot tearing of the casting.

BAKED OR DRY SAND CORE MIXTURES

In the previous chapter, it has already been mentioned that most of the cores used in shipboard foundries are of the baked sand type. The formula for dry sand cores can be altered to meet the specifications of a specific metal or alloy. The following formulas suggest various dry sand core mixtures for a specific metal or alloy, and are given merely as a guide to obtain good core mixes for shipboard foundries.

ALUMINUM

Washed silica sand (dry) AFS 100-150	78.0 lb
Washed silica sand (dry) AFS 70-100	22.0 lb
Woodflour	2.0 lb
Corn flour	1.0 lb
Linseed oil, raw, light	1.0 lb
Moisture (approx.)	3.5 lb

BRASS, BRONZE (light castings)

Washed silica sand (dry) AFS 70-100	60.0 lb
Washed silica sand (dry) AFS 100-150	40.0 lb
Linseed oil, raw, light	1.0 lb 2 oz
Moisture (approx.)	3.0 lb

BRONZE (heavy castings)
CAST IRON, STEEL

Washed silica sand (dry) AFS 70-100	100.0 lb
Iron oxide	1.0 lb
Corn flour	8.0 oz
Linseed oil, raw, light	9.0 oz
Moisture (approx.)	7.0 lb

CAST IRON AND STEEL

Washed silica sand (dry) AFS 70-100	100.0 lb
Linseed oil, raw, light	1.0 lb 2 oz
Moisture (approx.)	1.0 lb 12 oz

GENERAL PURPOSE (non-deforming)

Washed silica sand (dry) AFS 100-150	60.0 lb
Corn flour	1.0 lb 9 oz
Linseed oil, raw, light	1.0 lb 2 oz
Moisture (approx.)	3.0 lb 8 oz

GENERAL PURPOSE (high degree of green strength and collapsibility)

Washed silica sand (dry) AFS 100-150	100.0 lb
Woodflour	1.0 lb 12 oz
Corn flour	7 oz
Linseed oil, raw, light	1.0 lb 2 oz
Moisture (approx.)	7.0 lb

MONEL, CAST IRON, STEEL (heavy castings)

Zirconium silicate	100.0 lb
Silica flour	7.5 lb
Bentonite	1.0 lb
Linseed oil, raw, light	2.0 lb
Moisture (approx.)	1.5 lb

Before adding moisture to the sand mixture, all dry ingredients should be given a brief but thorough mulling.

In the baking of dry sand cores, two things actually take place. First, the moisture is driven off. Following this, the temperature rises, causing drying and partial oxidation of the oil. The actual baking of the core sand and the binder causes the sand grains to adhere to each other. In this manner, the strength of the core is developed.

GREEN-TOPPED CORE SAND MIXTURE

Green-topping of cores used for valve bodies is used quite extensively in some foundries and has been found to have numerous advantages. The bottom half of the core is made as usual in a baked or dry sand mixture, properly vented, checked, and baked. The top half of the core is made of green sand facing the same general mixture used for molding. The dried, lower half of the core is then placed on top of the green sand half while it is still in the core box. The complete assembly is then rolled over with the dried half acting as a support for the green sand upper half. The joint between the two core halves is finished off by slicking down the green sand. After the core has dried in the air for a short period of time, the complete core assembly is ready for use.

The following green sand mixture for green-topping of cores has been found satisfactory. However, as in all sand mixes, variations in the percentages of dry ingredients may be necessary.

Washed silica sand (dry)	
AFS 70-100	95.5 percent
Corn flour	0.2 percent
Bentonite	3.0 percent
Dextrine	1.3 percent
Moisture (approx.)	3.5 percent

CARBON DIOXIDE (CO_2) CORE SAND MIXTURES

The sand used for the CO_2 process of making cores should be clay-free and clean. The sand should be cool, no higher than 95° F to 110° F, and contain about 1 percent moisture. Warm sands tend to dry out during mixing, while cold sands mix poorly with the binder. The moisture content of the sand is critical. If the moisture content of the sand is above or below 1 percent, weak cores will result. Water should be added to dry sands during the mixing if the moisture content is too low. Grain size of the sand used is not critical, but will depend on the surface finish desired. Finer sands are generally used with the CO_2 process to improve surface finish because tolerances can be held closer in CO_2 cores than in green sand, baked or dry sand, or green-topped cores.

The main component of binders used is SODIUM SILICATE; other components are sugar, glycerine, or molasses. Only certain grades of sodium silicate are suitable in making CO binders; silicates having silica to soda ratios of 1.9 to 1 are satisfactory. (Common water glass is not suitable for a binder because it has a silica to soda ratio of 3.25 to 1. High ratio silicates are generally not viscous or alkaline enough to react with carbon dioxide and set (gel) during the gassing period.)

The second common ingredient of CO_2 binders is sugar syrup containing 50 to 70 percent solids. The purpose of the sugar syrup in the binder is to aid in the breaking-down properties (collapsibility) of the core. Sugar held in the binder decomposes when exposed to heat and weakens the bond between the sand grains. The decomposition of the sugar is not complete until the molten metal has started to solidify to a degree that the core holds its shape while the solidification progresses. Sugar syrup in the binder promotes good collapsibility and allows the core to be easily shaken out or removed from the casting.

Core sand mixtures, known as additives, may contain materials other than sand and binder. These additives are used to improve surface finish or to inhibit chemical reaction between the molten metal and the sand core during pouring and solidification. Sometimes additives may be applied to the core in the form of a core wash or core dip. There are many additives that may be used with the CO_2 process. However, when using additives remember that:

1. Cereal flours tend to weaken cores.
2. Acid additives and inhibitors should be avoided because they react with the sodium silicate.
3. Additives should be held under 1 percent of the total mixture to avoid weakening of the core.

Mixing is a very critical part of the CO_2 process. It is most important for the sand, binder, and any additives to be weighed accurately. Mixing time should be held to less than 5 minutes because overmixing will tend to dry out the sand. If any additives are used in the core mixture, they should be mixed in the dry state before the binder is added. Once the sand has been mixed, avoid unnecessary air contact by covering the sand with burlap. Only enough sand as is needed at one time is mixed because prolonged standing of the core mixture will result in losses through drying out and air hardening.

The following carbon dioxide core sand mixture has been found satisfactory for shipboard foundries. However, as in all mixes, variations in the percentages of ingredients may be necessary.

ALUMINUM

Washed silica sand AFS 100-150 (less than 1.0% moisture with temperature ranging from 95° F to 110° F)	100.0 parts
Sodium silicate (silica to soda ratio of 1.9 to 1)	3.0 parts
Sugar syrup (50 to 70 percent solids)	2.0 parts

NOTE: Do not mix over 5 minutes. Avoid air contact after mixing as much as possible.

BRASS AND BRONZE

Washed silica sand AFS 100-150 (less than 1.0% moisture with temperature ranging from 95° F to 110° F)	100.0 parts
Sodium silicate (silica to soda ratio of 1.9 to 1)	4.5 parts
Sugar syrup	2.3 parts

NOTE: Do not mix over 5 minutes. Avoid air contact after mixing as much as possible.

CAST IRON (heavy castings)

Washed silica sand AFS 100-150 (less than 1.0% moisture with temperature ranging from 95° F to 110° F)	75.0 parts
Washed silica sand AFS 70-100 (less than 1.0% moisture with temperature ranging from 95° F to 110° F)	20.0 parts
Sodium silicate (silica to soda ratio of 1.9 to 1)	4.5 parts
Iron oxide	3.0 parts
Sugar syrup (50 to 70 percent solids)	2.3 parts

NOTE: Do not mix over 5 minutes. Avoid air contact after mixing as much as possible.

CAST IRON, STEEL (light castings)

Washed silica sand AFS 100-150 (less than 1.0% moisture with temperature ranging from 95° F to 110° F)	100.0 parts
Sodium silicate (silica to soda ratio of 1.9 to 1)	4.5 parts
Iron oxide	2.0 parts
Sugar syrup	2.1 parts

NOTE: Do not mix over 5 minutes. Avoid air contact after mixing as much as possible.

When silica sand is mixed with sodium silicate, each grain of sand is coated with a thin film of the viscous liquid. After the coated sand has been rammed into the core box, tiny liquid lenses (bridges) of binder connect the sand grains. These connecting areas of liquid are not strong enough to bind the sand grains together. However, when carbon dioxide (CO_2) gas is passed through the sand mass, the sodium silicate binder thickens to such a degree that the sand grains are bound together, making the sand mass rigid. This results from the chemical reaction between the sodium silicate in the binder and the carbon dioxide gas which forms sodium carbonate and silica. Both the sodium carbonate and the silica are solids, therefore, a part of the liquid binder is converted to a solid material which stiffens the binder, giving the core strength.

Most CO_2 cores do not need a core wash, but if a core wash is necessary, use an alcohol-base core wash instead of a water-base wash. When sealing core joints or patching a core, an alcohol-graphite mixture is recommended. Heated CO_2 gas helps to eliminate the danger of moisture condensation from the atmosphere and achieves a greater spread of gas.

Carbon dioxide sand mixtures may be used for whole mold, a full facing of the mold, or may be used for only a localized facing. Such facings yield better dimensional accuracy than do baked or dry sand molds.

SHELL CORE MIXTURES

The ideal sand for shell cores should have a fineness between 90 and 200 (AFS) with the medium range from 90 to 140 (AFS), depending on the casting finish desired. Sands should be free from clay, organic matter, metallic oxides, and alkalies. The sand must be round grained, have a flat grain distribution curve, and have a silica content of at least 98 percent to ensure high sintering and fusion.

A wetting agent is used to overcome the dusting difficulties during mixing without the loss of strength or hardness. The addition of kerosene (0.2 percent by weight) is used to coat the individual grains of sand for better adherence to the powdered resin particles, and to minimize any segregation of the resin from the sand.

In shell molding and coremaking, finely powdered thermosetting phenolics of the two-stage type are the most satisfactory. In this type of compound, the resin must melt before it hardens, to bind the sand grains together. Such resins are uniform and, when properly mixed with silica sand, are capable of reproducing intricately shaped cores.

The mixing of the resin-sand mix is one of the most important steps in making a shell core. The quantity of resin required depends on the fineness of the sand and the strength of the needed core. The recommended proportion of resin to sand is (1) 5 percent resin for sands of about 65 AFS number, (2) 7 percent resin for sands of about 110 AFS number, and (3) 9 to 10 percent resin for sands of about 150 AFS number. Regardless of the percentage of resin to sand, it is essential that these substances be properly mulled at a slow speed for 15 to 20 minutes.

On the basis of the homogeneity achieved in a given period of time and the stability of the mixes, a mixer with a mulling action proves satisfactory. The capacity of the mulling machine used for dry mixes is about twice that for wet mixes because there is no bulking effect. The proper length of time in mixing is very important, and enclosed mulling machines should be used to avoid resin loss by dusting.

The following core sand mixtures for shell cores have been found to be satisfactory. However, as in all sand mixes, variations in the percentages of ingredients may be necessary.

Washed dry silica sand . . . . . . AFS 90-100 (clay content under 3%)	92-94 parts
Phenolic resin . . . . (2-step compound)	6-8 parts
Accelerating material . . . . . . (hexamethylenetetramine)	10 percent of binder percentage

NOTE: Mix the dry phenolic resin with the dry hexamethylenetetramine before adding to the washed silica sand. Do not mix over 5 to 7 minutes.

Washed dry silica sand . . . . . . AFS 150 (clay content under 3%)	91 parts
Phenolic resin . . . . (2-step compound)	9 parts
Milled zircon silicate . . . . (by weight)	7 percent
Silica flour . . . . (230 base, by weight)	10 percent

(Do not mix over 10 minutes.)

Washed dry silica sand . . . . . . AFS 230 (clay content under 3%)	82.0 parts
Milled zircon silicate . . . . AFS 375	7.5 parts
Phenolic resin . . . . (2-step compound)	10.5 percent
Kerosene wetting agent	0.25 percent

(Do not mix over 10 minutes.)

When the dry sand mixture comes in contact with a heated metal core box, the heat causes the resin-sand mixture to soften and form a shell-like coating on the surface of the core box cavity. After about 6 seconds, the core box assembly is inverted to allow the excess resin-sand mixture to fall out of the core box. The metal core box, with the shell-like coating adhering to it, is placed in an oven at a temperature of 570° F to 600° F for a period of 2 to 3 minutes for curing. The curing process converts (polymerizes) the resin to a hard, insoluble, bakelite-type plastic which holds the silica sand grains together.

AIR SET CORE MIXTURE

Air set type cores are made through the use of a Furan type binder. When the binder is treated with an acid catalyst, it changes to a tough, hard, brownish-green resin at room temperature. It is the final resin that holds the sand grains together. The catalyst used is 75 percent strength phosphoric acid; it is a water white, syrup-like liquid, with no odor.

The air set core mixture is used for large work where cores can be stripped in 30 to 60 minutes, and used 4 to 6 hours later without baking. Cores retain a plastic surface which allows stripping from rough boxes with little or no damage. Hardness of core will build up to 85 plus on the hardness scale in about 2 hours after it is removed from the box. Final cure is reached in about 4 hours.

In all instances, 2.0 percent commercial binder is added to the amount of sand. Generally, the amount of catalyst used is 20 to 35 percent of the weight of the binder. The catalyst is always dry mixed with the sand and the binder is always added last.

A minimum of 3 minutes mulling time of the binder is required. If the sand is cold, mulling ime in excess of 3 minutes will be required to distribute the binder.

The binder starts to cure as soon as it is mixed with the catalyst. Therefore the amount f catalyst used, sand temperature, and mulling ime are directly related to the working time f sand mix. Generally the sand mix should emain flowable for about 15 to 20 minutes.

The type of sand used has a bearing on working time and stripping time. Under identical conditions, the silica sands cure faster than lake or bank sand. Therefore, the amount f catalyst used must be adjusted accordingly.

COREMAKING TECHNIQUES

There is naturally a great similarity between he techniques employed in making a mold, and hose employed in making cores. The fundamental difference is that the mold is a cavity nto which the molten metal flows to form a olid shape, and the core is a sand body round which the molten metal will flow to orm a cavity in the finished casting. Both rocesses, however, require preparation of he sand—ramming, reinforcing, leveling off olling over, and venting. In addition, coremaking requires an additional process of air-drying, baking, gassing, or the direct application f heat.

The first step in coremaking is to decide hat type of core is needed. The next step is o assemble the materials, tools, and equipment that you will need. If there are core boxes vailable, inspect them for accuracy of fit. Make ure that the box you use is clean and free rom defects.

HAPING THE CORE

When you place the core sand in the core ox, spread it into a layer of uniform depth, and e very sure to tuck the sand into all corners nd recesses. The amount of sand that you use ill depend upon the size of the core. Usually bout 1/2-inch depth is sufficient; for small obs, however, you should completely fill the box.

RODDING to provide the necessary internal upport is the next step in the procedure. In many cases, it is enough just to lay the rods oosely in the body of the core, as indicated at art A of figure 9-8. Then fill the box with core and, pack it, strike it off, and slick it down, ollowing the same general procedure as that sed in making a mold.

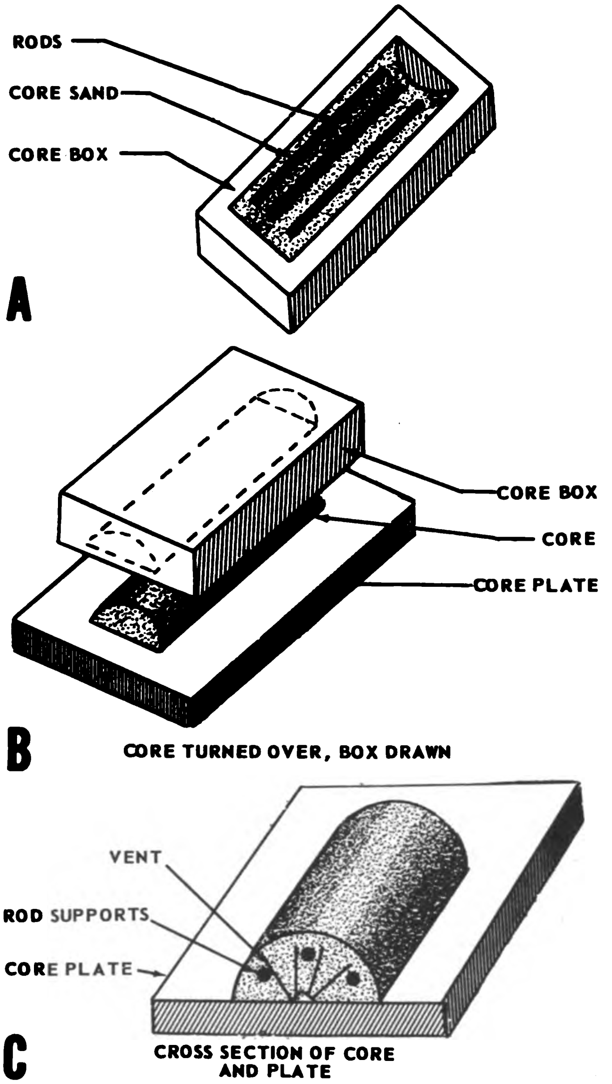

102.83

Figure 9-8.—Steps in making a core.

A green sand core, if you have occasion to make one, must be rammed hard, but the sand must not be packed too tightly for a core that is to be baked.

When cores are large, or of complicated design, you should put in a layer of facing sand and place the rodding before you fill up and ram the core box. You can follow this same procedure with small, simple cores; you may, on the other hand, simply press the rods into loose core sand heaped in the core box, and then ram the core in the usual manner.

After you have placed the layer of core sand in the box, use backing sand or coke, instead of core sand, to fill up the center portion of a large core. After the core has been baked, this center packing is removed. The use of this coarse material provides a better venting for the interior of the core.

VENTING the core is done by forcing a rod lengthwise through the core. For a core made in half-sections, a central vent can be provided by using a core file to cut a shallow V-shaped channel along the center axis.

Sometimes vent wax will have to be used, as where ordinary venting procedures cannot be employed. The wax is embedded in the core during ramming; it melts and disappears into the body of the core as the core is baked, leaving vent channels having the diameter of the wax strand. There is no ash residue from this wax. The disadvantage of this procedure is that the wax may produce a gas when the core comes in contact with the molten metal, and this gas can cause defects in the casting.

TURNING OUT the core is done by placing a core plate on top of the core box, and then rolling the box over (see part B of fig. 9-8). Gently rap the box with a mallet, meanwhile drawing the box away from the sand. Inspect the surface for defects; slicking or trimming may be done at this stage, but if you were careful to select a good core box, no surface repairs should be necessary. (Part C of fig. 9-8 illustrates the simple core ready for baking.)

SPRAYING the core with a core wash is done only when absolutely necessary. Use a graphite wash if the core is intended for a cast iron casting; for steel, bronze, or aluminum castings, use the silica flour wash described in chapter 6 of this training course.

BAKING THE CORE

The core is now ready to be placed in the core oven for baking. Do this as soon as possible after the core is made, for if it is allowed to stand, the drying out that takes place will weaken the core surface. A core having a large surface area in relation to its volume may be adversely affected by surface drying in only a few minutes.

If you are placing several small cores on a single shelf in the oven, keep some space between them. This will facilitate the baking process.

Skillful and careful preparation of a mold, and of the melt, can be canceled out by a poorly baked core. When a core is not completely baked, the hot metal around it will generate a gas that can be forced into the surrounding metal. The gas may form so rapidly that it will eve close off portions of the mold cavity.

Another disadvantage of using a core that i not completely baked is that it may become extremely hard when it is exposed to the heat i the mold. A core that is too hard resists th normal contraction of the metal, and cause stresses or cracks in the casting; the core wil also be difficult to remove from the casting

Overbaking is as much to be avoided a underbaking. After a certain point, the strengt of the core begins to decrease at a rapid rate Loss of strength can result in excessive breakag of the cores during handling or during casting in erosion of the core surface, and in dirt (du to such erosion) becoming entrapped in the casting. If overbaking is prolonged, the core ma crumble completely.

Baking time and temperature are therefor extremely important factors, but no hard and fas rules can be laid down. The best combinatio of time and temperature must be worked out o the basis of (1) type of binder used, (2) rati of oil to sand, (3) size of core, and (4) type o core oven used.

Here, as in the melting processes, result of tests and processes previously conducted wil be of great practical value in performing curren jobs. When a new core mix is to be used, it i advisable to make a series of tests to determin the effect of baking time, temperature, and ove characteristics.

The following simple test is suggested: Mak a series of 3-inch, 5-inch, and 8-inch cub cores, without using rods to give them artificia support. Bake these cubes at various temperatures (400° F, 425° F, 450° F, 475° F, and 500° F) for varying predetermined periods of time. Whe the cores have been removed from the oven an cooled, cut them open with a saw, and inspect t see the extent to which they are baked. Th results of this test will provide a basis for determining times and temperatures to use fo various cores in a specific oven, and under give atmospheric conditions.

MOISTURE EVAPORATION in an oil-san core is essential. The oven temperature doe not necessarily represent the core temperatur because of time lag before the core absorb enough heat to come up to oven temperatur Furthermore, the surface of a core may be a a higher temperature than the core center, because of the time required for heat to penetrate Therefore, a sufficient soaking period must b ed, so that all temperature gradients are ated, and all cores (from surface to center) oven temperature.

r oil-sand cores, this temperature must lower than 375° F, nor higher than 500° F; hatever temperature is decided upon, it e kept uniform. The oven heat then causes l in the sand to dry and partially oxidize, resulting increase in the strength of the

e size of the core is definitely a factor. uter surface will bake readily, and by the that the inside of the core has baked to num strength, the outer surface may be ked, and consequently decreased in th. This is one reason for using permeable ial with low moisture and bond content for ner section of large cores. It is also the for using low temperatures, and for the ated core plates and spaces left between to permit free circulation of air.

e BAKING CYCLE, involving as it does ny factors, must be a matter of judgment on tests and previous experience. A cal method is to observe the color of the When it has turned a uniform nut-brown , it is usually properly baked; a lighter indicates insufficient baking, and a darker indicates overbaking. You can acquire in recognizing these variations in color if ill study the appearance of test cube cores hich baking time and temperature have been ded.

the completion of the baking cycle, re- the cores from the oven. Do this carefully, t these high temperatures they are very e. Allow them to cool to a temperature 125° F before you remove them from the plates.

HING THE CORE

ne finishing operations that you will need rform upon baked cores will vary, depending the condition of each core on its removal the core oven, and upon the degree of di- ional accuracy that it must have.

LEANING and SIZING operations may be ssary to ensure proper fit of the core into old for which it is intended. If there are fins or humps, you should remove them, th the roughened spots, and brush off the sand. Check the vents, to see if they are ate to permit the escape of gases, and at ame time prevent metal entering the core when the mold is poured. Remove any permeable material such as backing sand, coke, or ashes, used to fill the center portion of the core.

To determine whether a core has the required dimensional accuracy, you will have to take core measurements with a pair of calipers, and then check each measurement against the pattern or blueprint. (The use of calipers is discussed in Basic Handtools, NavPers 10085-A.) If a core section does not conform closely enough to the blueprint dimensions, you will have to grind or file it to size. However, be sparing in the use of a file; any filing done on the core surface is all too likely to produce an inferior finish on the casting.

When a single core design is used repeatedly in the shop, it is a good idea to use a template, cut from thin sheet metal, the same size as the core section. When quality cored castings must be made, the use of templates and calipers is essential.

ASSEMBLING cores that have been made in sections is usually accomplished through the use of a core paste mixed as follows:

Bentonite	3.0 percent
Dextrine	6.0 percent
Silica flour . . . . (200 mesh or finer)	91.0 percent
Water . . . . (enough to develop a pasty consistency)	

Before applying the core paste, rub the core joints over each other to smooth their faces, and then remove all loose material with either a brush or with a light stream of compressed air. Apply the core paste to the joint faces (with a brush, a spreader, or your fingers), making sure it does not seal any of the vents of the core. Bring the core sections together, align them accurately, and firmly press the faces together. (See fig. 9-9.)

After the pasted core sections have set sufficiently to prevent slipping, seal the joint edges with a core filler mixed as follows:

Bentonite	3.0 percent
Dextrine	3.0 percent
Silica flour . . . . (200 mesh or finer)	94.0 percent
Water . . . . (enough to develop into the consistency of a thin putty)	

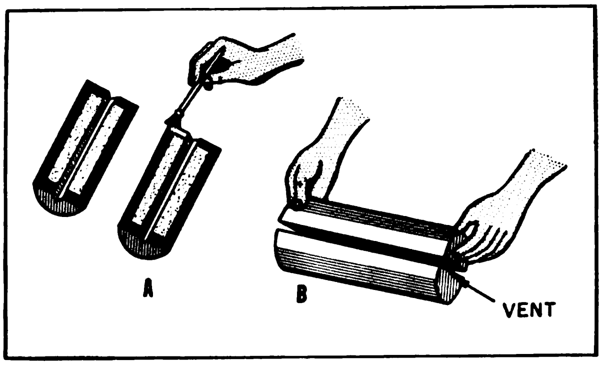

102.84
Figure 9-9.—Pasting and assembling a core.

Apply the core filler mixture to the core joint and smooth the surface of the core with your fingers. At this point, check the dimensions again. Before you use this core in a mold, dry it in the open air, or replace in a hot core oven for a short period of time. The previously mentioned core paste and core filler were developed by the Naval Research Laboratory and have been found to give satisfactory results. A major precaution to be observed in their use is to see that they are thoroughly mixed in the dry state before adding water, and again thoroughly mixed after the water is added.

CORE STORAGE

You might suppose that it would be advisable to make up a supply of cores for future use and store them, but this is definitely not a good practice. It is true that some stock cores are made in advance and stored. The general rule, however, is to make up a core within not more than 24 hours of the time than it will be used.

There are good reasons for this practice. Green sand cores lose moisture to the atmosphere during any extended period of storage, and consequently increase in strength. The much drier, baked cores absorb moisture from the atmosphere, and consequently decrease in strength, especially on the core surface. Oil-sand cores are less affected by moisture absorption than are those cores made with rosin-type binders, but neither of these types should be unnecessarily exposed to the atmosphere. Remember that any change in core properties occurring during storage can result in the production of defective castings.

POSITIONING A CORE IN THE MOLD

The most common method of positioning a core in the mold is through the use of core prints provided in the mold. This is the method illustrated at part A of figure 9-10. For most jobs, ram-up prints are adequate; but in some jobs, the prints are provided for by projections on the pattern. Occasionally, you may be forced to use chaplets, to prevent the core from lifting or floating when the metal is poured into the mold.

Another method of positioning the core is to hang it from the cope, as indicated at part B of figure 9-10.

Check the core vents, to be sure that when the cores have been set in the mold, the vents will be continued through the mold. It is also necessary, of course, that the vent be open at the core surface.

Make certain that the core is accurately set, for if it is set off-center, the casting thickness around the core will not be uniform. Do not depend wholly upon inspection to determine proper setting. A good way to check accuracy of the core setting is to apply a layer of flour paste to strategic points between the core and the wall of the mold cavity. Close the mold carefully; then open it, and check the thickness of the paste against the thickness specified for the casting.

Whether you make this flour paste check or not, you should always first close the mold, then open it and inspect for improper fits or crushed areas. If all is satisfactory, blow out the mold to remove any loose sand, then close and clamp it. After this has been done, do not move the mold again until after the metal has been poured.

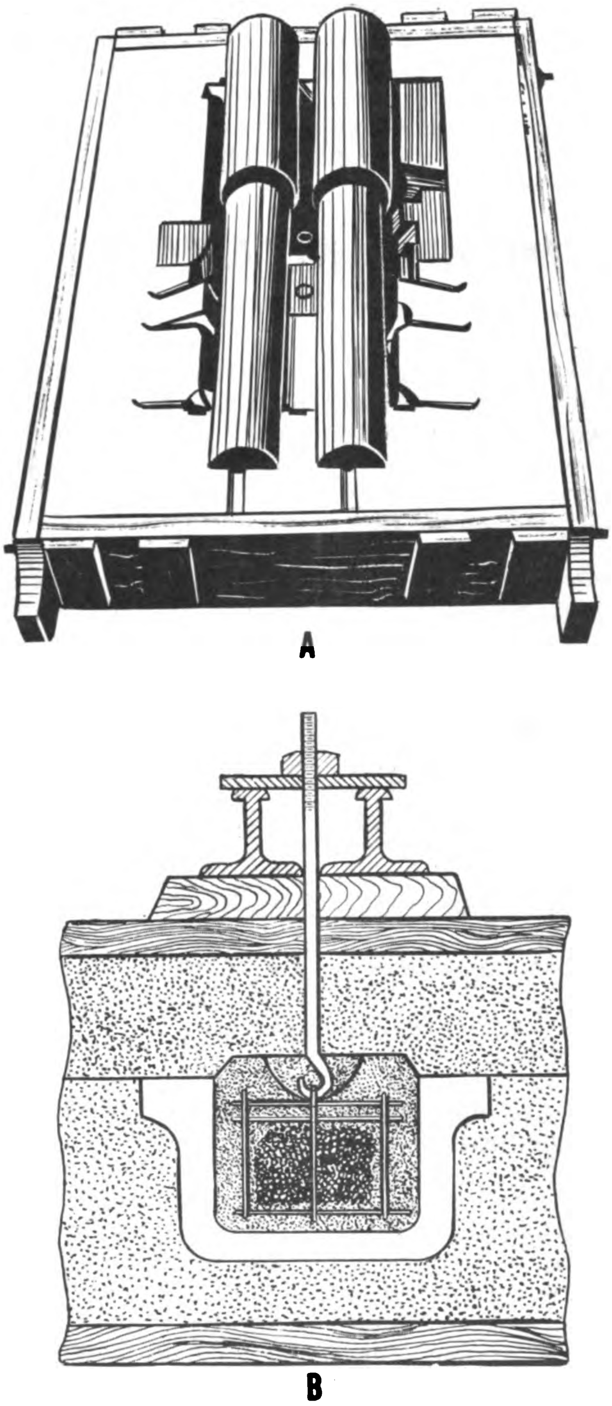

102.85
Figure 9-10.—Cores set in a mold.

CHAPTER 10

METALS AND ALLOYS

Many of the metals in use today were known to prehistoric man. Even before the time of written records man possessed certain smelting and metalworking skills. As early as 3000 B. C. the ancient Egyptians were producing bronze by alloying tin with copper. And, prior to the time that these early craftsmen along the Nile had developed their bronzemaking techniques, the Chaldeans in Mesopotamia had developed the art of working copper.

Since prehistoric times each succeeding civilization has made some contribution to our knowledge of metals. In recent years, of course, rapid advancements in the science of metallurgy have provided us with hundreds of metallic alloys unknown to the ancients. That fact notwithstanding, we of the modern world are greatly indebted to the civilizations of the past.

Familiarity with metals and their casting characteristics is fundamental to the production of sound castings. The Molder must have a knowledge of metals with which he will work, and the ability to recognize them in stock form by surface appearance or other means. To produce a casting intended for a specific application, he must know something about the various metallic elements, and the specifications that cover the cast alloys he produces.

Metals and alloys differ widely in properties or characteristics. Properties may be classed as chemical, electrical, physical, mechanical, or engineering. Chemical properties of a metal involve the way in which it is affected by atmosphere, salt water, or other reagents. Electrical properties are those that measure the electrical conductivity of the metal, its electrical resistance, and its magnetic qualities. Physical properties are color, density, shrinkage, and melting point. Mechanical properties are hardness, tensile strength, and other load-carrying abilities which may be measured by a mechanical means. Engineering properties are those properties which are not properly classified as chemical, electrical, physical, or mechanical. In general, they are based on a combination of other properties rather than being properties in themselves; some examples are machinability, weldability and castability.

Later in this chapter you will find a section entitled "Properties of Metals." This section could have been written to include a number of additional properties: specific heat, heat of fusion, elongation, and thermal conductivity, to name a few. The discussion, however, has been limited to those properties of a metal that are of primary concern to the Molder Third Class and Second Class.

This chapter discusses, in the language of the layman, the internal structure and the exterior appearance of metals, their properties and characteristics, and simple testing procedures for their identification. You will learn something of what happens inside the metal as it solidifies, and the factors that accelerate the process.

INTERNAL STRUCTURE OF METALS

The various elements, metals included, are crystallized in their solid state according to a symmetrical arrangement of their atoms. This ordered distribution is the normal, or stable, condition of metal compositions, although the pattern (or type of space lattice) is not the same for all metals.

When a metal is molten, the atoms of which it is composed are free to move at random, and the definite pattern is disarranged because the attraction of the atoms for each other is overcome by the speed of their movement. Freedom of atomic movement increases proportionately as the temperature of the metal rises above its melting point; it also slows down proportionately with decreasing temperature.

With continued heat removal from a mass of nolten metal, the internal temperature of the nass decreases at a rate that is directly proortional to the surrounding external temperaure of the mass. Except in the case of an alloy vhich freezes over a range of temperatures, his ratio of temperature decrease continues ntil the solidification point of the metal is eached; and at this point, internal temperature emains constant until the mass is completely olidified, even though surrounding external emperature continues to decrease.

During this phase, the random movements f the atoms stop, and the atoms arrange themelves into a definite geometric pattern called e space lattice. As solidification continues, ach space lattice grows and forms one of the ndividual crystals, or grains, of the metal.

Atomic motion does not stop entirely with olidification; random motion has ended, but he atoms continue to move with a vibratory notion, while maintaining a fixed relationship o other atoms within the same space lattice attern. This vibratory motion continues as ong as the temperature of the mass is above bsolute zero. (Absolute zero is approximately -273 degrees on the Centigrade scale, or -459 legrees on the Fahrenheit scale.)

Molders can certainly make castings by ollowing established practices, without fully nderstanding the principles that underlie these ractices. However, since the degree of crystaline symmetry of a metal is responsible for many f its properties, a discussion of the internal structure of metals is not out of place here. The Molder can better understand the phenomena vhich occur in a casting as the metal solidifies, nd can appreciate the influence that casting lesign, molding methods, and pouring techniques an have on the properties of the part produced, if he has some basic knowledge of metallurgy.

This knowledge should comprise the internal tomic structural arrangements developed in a olid metal with the application or removal of eat; the solidification of metals; the physical roperties of metals, and methods for modifying r improving properties; and the working, shaping, and testing of metals and alloys.

SPACE LATTICE PATTERNS

The atoms of metals or alloys in a solid state arrange themselves into a pattern called a space lattice, composed of unit cells adjacent to each other and correctly oriented. Each unit cell is three-dimensional, with a definite number of atoms arranged in a particular way, and is identical in shape and orientation with every other space lattice in the specific metal. Only fourteen types of space lattice are possible, as far as we know, and most of the common metals crystallize according to one of three types.

The geometric patterns most commonly formed by atoms in a space lattice are the body-centered cubic unit cell, the face-centered cubic unit cell, and the close-packed hexagonal unit cell. These patterns are illustrated in figure 10-1. From these illustrations, and from reading the descriptions of the unit cells as given here, you will see that the identifying phrases mean exactly what they say.

A body-centered cubic lattice consists of nine atoms, one located at each corner of the cube, and one located in the center of the cell body. (See part A of fig. 10-1.)

A face-centered cubic lattice consists of fourteen atoms, one located at each corner of the cube, and one located in the center of each cube face. (See part B of fig. 10-1.)

A close-packed hexagonal lattice consists of seventeen atoms; one atom is located at the center of each end face, and is surrounded by six additional atoms, one at each corner of the hexagon. Three equally spaced atoms in the body center of the unit cell account for the remainder of the seventeen atoms. (See part C of fig. 10-1.)

The dots used in figure 10-1 are to indicate the relative location of atoms. Do not fall into the error of thinking that each atom is a hard ball of specific dimensions, rolling like a marble down an inclined plane. The atoms are composed of smaller moving particles held together by electrostatic charges.

The geometric unit cell structures described here help to determine ductility and strength of a metal. Ductility, for example, is attributed

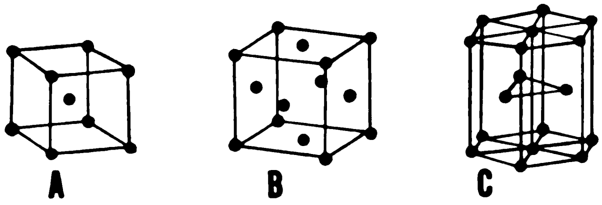

18.64
Figure 10-1.—Common unit cell structures.

to the flowing or gliding movement along crystallographic planes, with all the atoms in one plane moving as a block.

Because of the voids between atoms, those metals having a body-centered cubic lattice pattern do not have well-defined slip planes, but deform by movement along various planes. As a result, these metals have great strength, but only medium ductility. Iron, molybdenum, and tungsten are examples. The face-centered cubic lattice has the highest degree of atomic concentration and symmetry. Aluminum, copper, silver, and other metals having this type of space lattice are ductile and easily deformed. Metals having hexagonal lattices (cadmium, magnesium, zinc), while they do not have the gliding freedom of face-centered cubic lattices, nevertheless approximate the plasticity possessed by the latter, and certainly surpass the ductilty of the body-centered cubic unit cell.

The fourteen types of space pattern that are possible fall into seven crystal systems. A discussion of the crystal systems would probably be more confusing than helpful; it is enough to know that they are distinguished from each other according to relative lengths of the coordinate axes within the space lattice, and the equality of angles.

Table 10-1 lists the various elements commonly carried and used in Navy foundries, the symbol of the various elements, data concerning the element's space lattice form, specific gravity, density, melting point, and the boiling point.

CRYSTALLIZATION

When a molten metal begins to solidify, the atoms arrange themselves into UNIT CELLS (molecules) that have a definite geometric pattern. As soon as one such cell has been formed, other atoms attach themselves to it, and form additional unit cells. Millions of unit cells joined together form a single CRYSTAL, or grain.

In the unit cells of pure metals, the atoms are of the same element. Pure metals, except for the copper used in electrical systems, and the zinc anodes that serve as hull protectors, are not much used in foundry work. The commercially useful metals are usually composed of more than one element, and the cell unit is a compound one. Two types of these compound cells are possible: (1) intermetallic compound, or substitution alloy, and (2) solid solution alloy.

In an intermetallic compound, the element are in a constant proportion. An alloy of iro and carbon (Fe3 C) is a good example. Ther are always three atoms of iron to one atom of carbon. This ratio never varies.

In a solid solution alloy, the amounts of the elements may vary. Copper-nickel is a good example of a solid solution alloy. It may be composed of 90 percent nickel and 10 percent copper; it may be 80 percent nickel and 20 percent copper; it may be 80 percent copper and 20 percent nickel; in fact, it may be practically any proportion of these two elements. This alloy consists of a solid solution; no compounds are formed.

The photomicrograph of pure copper in figure 10-2 illustrates the crystallinity that is inherent in all metals. Grain size and shape, however, can be varied greatly for any metal One thing which determines crystal size is the rate at which crystal nuclei form. (The nucleus is a single atomic unit cell to which other atoms may attach themselves.) Another factor in crystal size is the amount of intercellular space available between the nuclei of developing grains a single crystal can grow in size until it meets another developing crystal. Both size and shape are greatly influenced by external temperature conditions after solidification, by the heat treatment given to the metal, and by the hot or cold work to which the metal has been subjected.

18.66

Figure 10-2. —Photomicrograph of pure copper able 10-1.—Symbols of Various Elements, and Data Concerning Lattice Form, Specific Gravity, Density, Melting Point, and Boiling Point.

Element	Symbol	Lattice Form	Specific Gravity	Density (lbs. per cubic inch)	Melting Point (°F)	Boiling Point (°F)
luminum	Al	Face-Centered Cubic	2.7	0.0975	1220	4442
ntimony	Sb	Rhomb. Hex.	6.6	0.239	1166	2616
eryllium	Be	Close-Packed Hex.	1.8	0.0658	2336 ± 70	5020
ismuth	Bi	Rhomb. Hex.	9.75	0.354	518	2840
admium	Cd	Close-Packed Hex.	8.7	0.313	610	1409
arbon	C	Hexagonal	2.2	0.0802	6700 ± 180	8730
hromium	Cr	Body-Centered Cubic	7.2	0.260	3430 ± 20	4829
obalt	Co	Close-Packed Hex.	8.9	0.320	2723	5252
opper	Cu	Face-Centered Cubic	9.0	0.324	1981	4703
ron	Fe	Body-Centered Cubic	7.9	0.284	2802	5430
ead	Pb	Face-Centered Cubic	11.4	0.4107	621	3137
agnesium	Mg	Close-Packed Hex.	1.7	0.0628	1202	2017
anganese	Mn	Complex Cubic	7.4	0.268	2211 ± 20	3900
olybdenum	Mo	Body-Centered Cubic	10.2	0.369	4829 ± 90	10040
ickel	Ni	Face-Centered Cubic	8.9	0.322	2651	4950
hosphorus	P	Face-Centered Rhomb.	1.8	0.0658	111	526
ilicon	Si	Diamond Cubic	2.3	0.0842	2605 ± 35	4860
ulfur	S	Orthorhombic	2.1	0.0748	246	832
in	Sn	Tetragonal	7.3	0.2637	449	4120
itanium	Ti	Close-Packed Hex.	4.5	0.164	3020 ± 180	5900
ungsten	W	Body-Centered Cubic	19.3	0.697	6119 ± 35	10706
anadium	V	Body-Centered Cubic	6.0	0.217	3110 ± 90	6150
inc	Zn	Close-Packed Hex.	7.1	0.258	787	1664

The nuclei, or crystallization centers, usually form at random throughout the molten mass. Growth of an individual crystal is outward from the cell nucleus along axes that lie at right angles to each other. Some grains develop with equal growth in all directions. Other grains develop as columnar grains, with growth along one long axis and one short axis. In both of these structures, crystal growth continues until it collides with another developing crystal; each grain, therefore, has a somewhat different shape and axis orientation.

A GRAIN is essentially a single crystal, but the latter term is reserved for a group of space lattices of the same orientation, that have developed regular faces in the absence of interference with other developing nuclei.

While the rate of nuclei formation and intercellular space between nuclei are factors in grain size, they are themselves determined by the temperature of the metal. High temperatures and slow cooling through the solidification range result in the production of large grains; relatively low temperatures and rapid cooling through the solidification range will produce small grains. In the production of a casting, remember that the cooling rate has an important effect upon grain size. If the cooling rate is slow, large-sized grains will develop. Rapid cooling develops small-sized grains.

The strength of a metal at the grain boundaries (that is, where one grain meets another) is not the same as the strength within the grain. At normal room temperature, a metal has its greatest strength at the grain boundaries, but this condition can be altered by changes in temperature. When a metal is fractured in a tension test, the break almost always takes place through the grains; but most metals, if kept under tension at high temperature for a considerable time, will fracture at the grain boundary.

SOLIDIFICATION

Metals can exist as both liquids and solids; in some metals, the change of form is reversible. Pure metals also solidify at or very near to the same temperature as that at which they melt. This change from a solid to a liquid state, of from a liquid to a solid is called a phase change.

The transition from hot molten metal to a solid casting takes place in three steps: cooling from the pouring temperature to the start of solidification, commonly called the liquidus line; cooling, through the solidification range, commonly known as cooling from liquidus to solidus (end of solidification); and cooling of the solid metal to room temperature. (The effect of each step upon the quality of the casting is discussed in Chapter 12, Casting Procedures.) This section deals with the changes that take place in the internal structure of a metal or alloy, during solidification.

As mentioned before, the atoms of a molten metal that is beginning to solidify arrange themselves into unit cells having a definite space lattice pattern. There are some metals, however, that can exist in different crystal forms, depending upon temperature conditions. This ability to exist in more than one lattice form is called allotropy; it is a characteristic of several commercially important metals, among them iron, managanese, and chromium.

Iron at room temperature, and up to about 1670° F, is of the body-centered cubic type, and is known as alpha iron. In the alpha form, iron is magnetic, and dissolves only minute quantities of carbon. At about 1670° F, however, the crystal structure of iron changes to face-centered cubic lattice. This is the form known as gamma iron; it is non-magnetic, and readily absorbs carbon, the amount capable of being dissolved increasing with temperature. At about 2550° F, the structure changes again to body-centered cubic lattice. This form, known as delta iron, persists up to about 2800° F, which is the melting point of iron.

These temperature levels at which phase changes take place are called the critical (or transformation) points. Because of differences in the methods of determination, transformation points may vary somewhat on graphs developed for various metals. Figure 10-3 illustrates, in a simplified form, these critical points and transformation ranges for iron.

As the iron solidifies and subsequently cools, these allotropic phase-changes take place in the reverse order. It happens, however, that the temperature points at which all metals being cooled undergo these transformations are slightly lower than the temperatures at which the same metals undergo transformation while being heated.

Where alloys are concerned, solidification and phase changes, and even physical properties, may be considerably different from the characteristics of the pure metal. The transformation (or critical) points vary with changes in

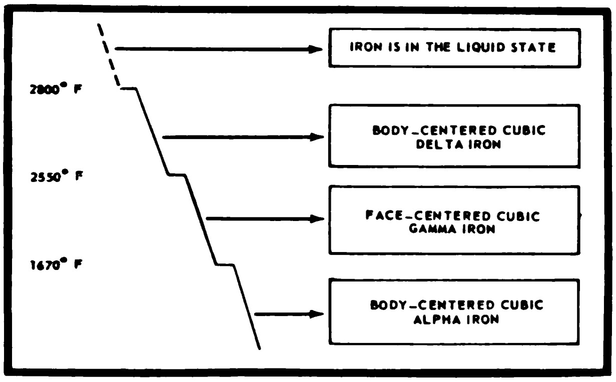

102.86
Figure 10-3.—Phase changes in iron.

chemical composition. For example, pure iron changes from the alpha phase (body centered) to the gamma phase (face centered) at 1670° F, as stated before. However, in iron containing 0.5 percent carbon (medium-carbon steel), the critical temperature is 1400° F. The difference in chemical composition represented by the presence of 0.5 percent carbon has lowered the temperature at which the alpha to gamma change occurs from 1670° F to 1400° F.

An ALLOY can be defined as a substance possessing metallic properties, and formed by combining two or more elements, one of which must be a metal. By combining various elements, it is possible to improve strength, ductility, hardness, wear resistance, corrosion resistance, and other properties.

Before an alloy can be formed, it is necessary that the elements be soluble in a liquid state. Most metals are soluble in both liquid and solid state, but there are exceptions. Combinations such as lead and aluminum, cadmimum and aluminum, or iron and bismuth, cannot exist as solidified alloys, since they do not mix when liquefied. Other combinations, such as lead and zinc, or copper and iron, are partially soluble. In the latter combination, each metal is capable of dissolving small portions of the other, but in a quantity insufficient to produce a satisfactory alloy.

Other elements that are soluble in the liquid state are insoluble in the solid state. Alloys composed of these elements solidify into a mass having individual crystals of each of the elements. Combinations that solidify in this manner are lead and antimony, aluminum and silica, and silver and lead.

Metallic combinations that are mutually soluble in both the liquid and the solid state, and in all proportions, solidify in such a manner that all the crystals in the mass are practically identical. These combinations form intermetallic compounds in some instances; in other instances, they form solid solution crystals. Examples of mutually soluble combinations are copper and nickel, iron and manganese, and tungsten and molybdenum.

The way in which the phases in an alloy are distributed throughout the structure is known as the structural constituent of the alloy. The phases are not necessarily uniform in distribution. An alloy may be composed of a eutectic as one structural constituent, while a second structural constituent may be a phase not intimately associated with the first.

The term EUTECTIC is a common term among metalworkers. It may be briefly defined as an alloy or a solution the components of which are in such proportion that the melting point is the lowest one possible with that group of components. In a series of alloys formed by the combining of two metals in varying proportions, the alloy with the lowest melting point (if such an alloy exists) is the "eutectic alloy," and the composition of this alloy is the "eutectic composition."

A eutectic alloy solidifies without a change in temperature at the eutectic point, but heat must be extracted before solidification can occur. In this way, it is similar to the freezing of water. The mixture must be lowered to the solidification temperature (which is different for different materials), but it then remains at that temperature until the whole mixture is solidified.

Suppose that we have a liquid composed of two metals that are soluble as a liquid but insoluble as a solid; that is, metals capable of forming an alloy, but which do so by solidifying into a mass composed of individual crystals of each metal. If the alloy is of the eutectic composition initially, the mass will remain liquid until the eutectic temperature is reached. The material then solidifies at the same time with a fine-grained eutectic grain structure. A study of the equilibrium diagram in figure 10-4 will help you to understand the term eutectic. In this particular example, the eutectic temperature is 500° C (932° F) and the eutectic composition is approximately 40 percent metal A and 60 percent metal B.

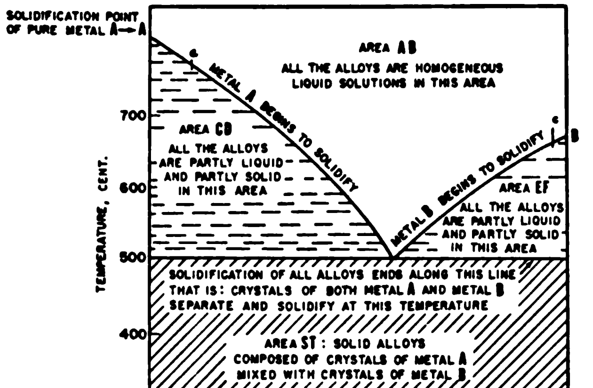

102.87

Figure 10-4.—Equilibrium diagram and the eutectic composition.

If the composition is other than eutectic, the solidification mechanism is different. In an alloy composed of 90 percent A and 10 percent B the formation of pure crystals of metal occurs as the temperature of the mass decreases. In our example, crystals of pure metal A form at a temperature indicated a. If the composition were reversed, crystals of pure metal B would begin to form at c. This individual crystallization continues until enough of the high-content metal has crystallized and the eutectic composition is attained. When this occurs, the remaining mass solidifies at the eutectic temperature.

Alloys of this class whose composition is other than eutectic solidify into a matrix consisting of pure crystals of the high percentage metal embedded in the fine-grained eutectic crystals. Lead-antimony bearing alloy and aluminum-silica alloys are typical examples having this sort of solidification.

Copper-nickel and other combinations of solid solution type alloys that solidify with chemically identical crystals merely have a cell unit and crystal structure more rich in the high percentage metal. Solid solution alloys do not form a matrix like the alloys similar to lead-antimony. However, the ratio of elements in the composition of solid solution alloys does have an effect on the melting point, solidification temperature, and the properties developed.

This type of information on internal structure of metals may seem more suited to the laboratory than to the foundry. Nevertheless, it can be helpful to the Molder, especially in conjunction with casting processes. The reason for its importance is that phase changes occur within a casting while it cools, and a change of phase takes place only when that temperature at which it can occur is maintained.

The Molder who is interested in metallurgical information underlying his work processes will want to know the distinction between these types of combinations (insoluble, partially soluble, soluble in the liquid state only, and soluble in both liquid and solid states). For the Molder who may find these distinctions difficult to remember, and the whole area too abstract to appeal to him, we can sum it up by pointing out that there are two common kinds of alloys: (1) those that are completely soluble, and form an alloy through chemical combination, and (2) those that form individual crystals bound together in a more or less mechanical fashion.

However you arrive at the knowledge of these two kinds of alloys, whether through understanding or acceptance, never lose sight of the fact that these differences are important to you in your work, since they greatly influence the physical properties of the alloy produced.

The phenomena described in the preceding pages occur in the metal contained by the mold cavity as the casting cools from its temperature at the time of pouring to normal room temperature. Within seconds after the metal is poured,

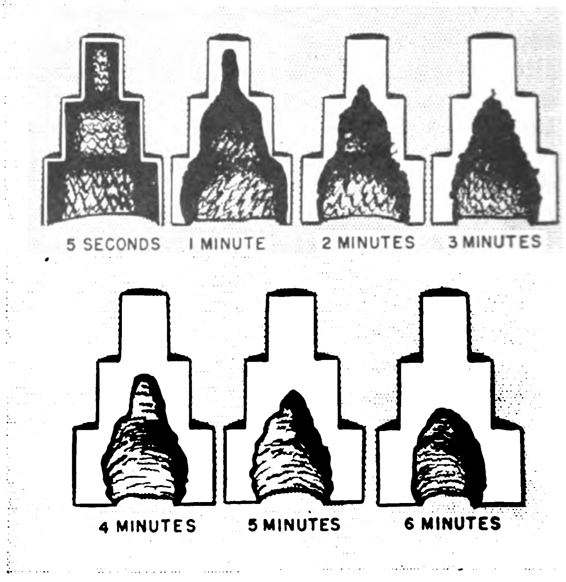

102.88

Figure 10-5.—The mechanism of metal solidification.

solidification begins. The rapidity of solidification is illustrated in figure 10-5. Although the samples shown in this illustration are steel, the same solidification principles hold true for other metals and alloys.

A casual glance at figure 10-5 reveals that a casting solidifies as a gradually thickening envelope or skin. The rapidity of solidification depends on the relationship between the sectional mass (volume) of the casting, the mold surface area, and the solidification range of the metal. In figure 10-5, you can see that small sections solidify first. It is also obvious that the thinner the section, the more rapidly will solidification occur.

The element of time is, of course, an important factor in the progression of solidification. More important, though, is the influence of corners. Take a look at the experimental sample labeled "one minute" in figure 10-5. Notice that solidification has progressed to a greater degree at the external corners than at any other part of the casting. The acceleration of solidification at external corners is due to the proportionately greater mold surface at these points.

Now notice that solidification has progressed to a much lesser degree at the internal corners than elsewhere in the casting. Here the mold surface is faced on two sides by metal. This causes the sand to become heated faster than it can carry the heat away through the mold, with the result that heat withdrawal from the casting, and thus the solidification rate of the metal, is slowed down at these locations. The conditions of solidification illustrated in figure 10-5 could be somewhat improved by the proper application of fillets or by tapering the sections.

With the possible exception of gray cast iron, the metals cast in Navy foundries contract considerably as they solidify. This means that molten metal, over and above that needed to fill the mold cavity initially, must be supplied as solidification progresses. If this extra metal is not provided, a sound casting cannot be produced. You are already familiar with the molding method used to provide the metal necessary to compensate for liquid metal contraction—risers. At this point, we need only to emphasize that risers must be so located that they feed the area requiring the extra metal and thus serve to produce a sound casting. Otherwise the heat, time, and labor required to produce the extra molten metal will have been wasted. An incorrectly placed riser may even cause worse shrinkage of the casting than would occur with no riser at all.

In regard to solidification, it cannot be too strongly emphasized that sections of a casting must be so proportioned that "progressive solidification" occurs. By this phrase we mean that solidification (within a particular casting section requiring extra metal supplied by a riser) is such that the first metal to solidify within the section is at a point most distant from the riser. Further, it means that solidification then progresses from this most distant point toward the hot well of metal in the riser.

After the casting has solidified and continues to cool, it becomes more rigid and increases in strength. Here again a contraction occurs. It is this contraction in the solid state that is provided for by the Patternmaker when he makes the layout for, and constructs, the pattern. This solid state contraction, incidentally, creates the force that causes the core of hollow castings to collapse.

There are two kinds of contraction, then, that must be compensated for if a sound casting having accurate dimensions is to be produced. The first is the contraction occurring as the metal cools in the liquid state. This contraction is taken care of by risers and such additional devices as chills and padding. The second is the contraction occurring as the metal cools after solidification. This contraction is provided for by laying out the pattern with a shrink rule.

Considerable information is available on contraction in the solid state, but only a few determinations have been made about liquid contraction. Experimentation by commercial foundries and various metal societies has shown that liquid steel contracts 1.6 percent in cooling 100° C (212° F) and that manganese-bronze contracts 2.25 percent under the same conditions. From this information, it is evident that risers of considerable size are essential for these alloys. Data pertaining to contraction of some of the metals and alloys after solidification are presented in table 10-2. This information was obtained from International Critical Tables.

Table 10-2—Percent Contraction of Various Metals Upon Solidification.

Steel	3.0 percent
Manganese-bronze	6.0 percent
Aluminum	6.5 percent
Copper	4.0 percent

Zinc	4.5 percent
Lead	3.6 percent
Various other alloys	0.7 to 2.0 percent

Some metals are composed of elements having the ability to exist in two or more forms at the same time (allotropic changes). In such metals it is possible for expansion and contraction to occur within the casting at the same time. For example, figure 10-5 demonstrates that thin sections solidify more rapidly than thick sections. Therefore, castings having both thick and thin sections cannot possible solidify at the same time. This means that the conditions of temperature are not the same in both sections. Because of temperature differences with different parts of the casting, one section may be passing through a phase change that results in contraction, while the other section (at another temperature) may be going through a phase change that results in expansion. The total result in the casting is the production of excessive stresses, particularly where sections of unequal mass are adjacent. Here the solidified and contracting thin section severely stresses the skin of the partially solidified thick section. A force of this kind will concentrate at internal corners where solidification is most retarded. This condition may cause serious casting defects.

Another effect of differing sectional thickness is the grain size obtained. It was previously pointed out that slow cooling produces large or coarse grains, while fast cooling produces small or fine grains. Slow cooling is associated with large casting sections, and fast cooling is associated with small casting sections. Where large and small sections exist in the same casting, one section solidifies with a large coarse-grained structure while the other solidifies with a small fine-grained structure. Since a particular alloy's property of strength depends largely on grain size and grain size uniformity, it is apparent that an extremely nonuniform grain size throughout the casting is objectionable.

To some extent a difference in grain size within a particular section is bound to exist. Why? Because the metal lying next to the mold wall solidifies more rapidly than that near the center of the casting. (Remember: fast cooling—small grains; slow cooling—large grains.) Nevertheless, a casting's grain structure should be as uniform as possible.

PROPERTIES AND CHARACTERISTICS OF METALS

If all metals had the same properties, there would not be a need for producing the many alloys that are now in use. Hundreds of alloys are produced in a wide variety of furnaces in commercial foundries. In the Navy's shipboard and advanced-base foundries, however, Navy Molders normally produce castings from 16 alloys melted in oil-fired, gas-fired, electric rocking (indirect arc or resistor), or induction furnaces.

Can you define a metal? Although we all have a general idea of what we mean by the word, it isn't easy to give a simple, accurate definition. Chemical elements are considered to be metals if they are lustrous, hard, good conductors of heat and electricity, malleable, ductile, and heavy. Within the group of chemical elements that are classified as metals there is, of course, considerable variation in the distribution of these properties. Some metals are heavier than others; some are more malleable than others; and some are better conductors of heat and electricity. In general, however, these properties are known as "METALLIC PROPERTIES," and chemical elements that possess these properties to some degree are called METALS. Chemical elements that do not possess these properties are called NONMETALS; oxygen, hydrogen, chlorine, and iodine are examples of nonmetallic chemical elements. Chemical elements that behave sometimes like metals and sometimes like nonmetals are often called METALLOIDS. Carbon, phosphorus, silicon, and sulfur are examples of metalloids.

An ALLOY may be defined as a substance that has metallic properties and that is composed of two or more elements. The elements that are used as alloying substances are usually metals or metalloids. The properties of alloys differ from the properties of the elements that compose the alloys, and in this difference lies the usefulness of alloys. By combining metals and metalloids, it is possible to develop alloys that have the particular properties required for a given use.

The Navy Molder is primarily concerned with certain properties and characteristics of metals and alloys so he can produce a casting capable of standing up under the designed operating conditions set forth by the design engineer and Navy specifications.

As previously stated, all elements are made up of atoms that are bonded together to form a definite pattern called space lattice patterns. These space lattice patterns are composed of unit cells called molecules, which are adjacent to each other. The theory is that the molecules are constantly in motion, as demonstrated by the following experiment.

Two cubes, one of pure gold and the other of pure lead, were prepared for the experiment as follows: One surface of each cube was leveled and polished to a high degree. The cubes were then placed with the polished surfaces together, tightly clamped, and left undisturbed at a temperature of 18° C (65° F) for a period of 4 years. At the end of the 4-year period when the clamp was removed, it was found that the two cubes had become firmly bonded (welded) together. Thin slices of metal of a definite thickness were removed from the lead block starting from the end opposite the bonded joint. The first thin slices of metal removed from the bonded gold-lead block were of pure lead, but as the bonded joint was approached, it was found that the gold in the one cube had diffused (moved) into the lead cube. The amount of gold that was found in the lead cube when considered from a practical viewpoint may be thought to be of no significance, as it was only 1.5 ounces per ton of lead at the bonded joint. However, the fact remains that the molecules of gold did actually diffuse, or in other words, move among the molecules of lead, and did so while both the metals were in the solid state, proving that it was MOLECULAR MOTION (movement of molecules) that bonded the cubes together.

MOLECULAR ATTRACTION can be illustrated by using two gage blocks of the Johannson type. These gage blocks are made of steel, and are hardened, ground, and lapped until they are flat and plane and have a finish of unusual smoothness. When in use, the flat, plane surface of one block is placed in contact with another block by a wringing motion. After wringing the two blocks together (twisting motion) so as to exclude as much air as possible from between the contact surfaces), it is found that it takes considerable force to pull the two blocks apart. This force is greatest when the pull is at right angles to the contact surfaces of the blocks.

These gage blocks have been demagnetized, so it is not magnetism that holds them together. Neither is it air pressure that holds them together. (The blocks will cling together just as tightly when placed in a vacuum.) There is no special property in the steel used in these blocks.. Any two blocks of any metal or substance will act in the same manner. Even glass will react in the same manner. The necessary condition for this attraction of two substances are plane, smooth, and clean surfaces.

What causes these blocks to cling together? It has been shown that there is a force holding the molecules together. The closer the surfaces of the two blocks are, the more chance this force has to make contact and the more points of contact that the two surfaces have, the greater the force will be. The Johannson gage blocks, due to their smooth, and plane surfaces allow contact at many points on their surface, thereby, showing quite clearly the molecular attraction force.

If two bars of cold steel are ground and lapped and the lapped surfaces placed together and hammered, no effect of bonding or welding will be noticed. However, heat the two ends of the steel bars, lap, and hammer them together, and a bond or a weld will be formed. The reason for this is that when the steel bars are heated, the metal is plastic enough to flow under the blows of the hammer. The metal being plastic causes the molecules of one bar to come in intimate contact with the molecles of the second bar, thereby the molecular attraction becomes apparent and a bond or weld is produced. It has been illustrated that molecular attraction does not make itself apparent until the molecules come in contact with each other. The hot metal being plastic makes contact possible between a great number of molecules at one time. However, in the case of the cold steel bars as previously stated, the contact of the molecules is only possible between a limited number of molecules at any one time, therefore, the cold steel bars will not produce a weld.

When electric butt welding the two steel rods together, the cold ends of the metal pieces are butted end to end, which in itself does not make the rods bond together. However, when heat is generated by the resistance of the steel to the passage of electricity, it raises the temperature of the ends of the steel bars to a point where the metal becomes plastic, then the molecules come into contact over the entire surface of the ends of the rod and the molecular attraction bonds (welds) the two bars together.

Molecular attraction may also be called by other names: COHESION and ADHESION. Cohesion is the attraction that molecules of like materials have for each other; such as iron for iron, and copper for copper. Adhesion is the attraction that unlike kinds of material have for each other, such as wood and glue.

ELASTICITY is the power a substance may possess of regaining its original form or volume after the removal of an outside force that has caused a change in the form or volume. The property of elasticity is common to the three states of matter—solid, liquid, and gaseous. Solids are those substances that regain their form without support from any other source. Liquids are those substances that take the shape of the vessel holding them; the vessel requires no cover in order to retain the substance. Gases are those substances which expand to fill the entire space of the vessel that holds them; this vessel therefore requires a cover in order to retain the substance. Liquids and gases have only the property of elasticity of volume since their shape is governed by the vessel retaining them.

Solids have the property of elasticity of the volume and shape. To illustrate the elasticity of a solid, consider a metallic wire subjected to a stretching force. Attach one end of the metallic wire to a firm support and attach weights to the free end. As weights are added to the wire, the length will increase in proportion to the stress developed within the wire. As weights are removed from the wire, the wire will regain it's original length. This is true up to a certain point, that is, up to a certain applied load or weight. Beyond this point, the removal of the applied load or weight will not result in the wire regaining its original length, and the point known as the ELASTIC LIMIT or YIELD POINT has been exceeded. Therefore, the elastic limit or yield point may be defined as the point at which the addition of more weight to the substance will result in the substance being permanently distorted.

Liquids and gases have no elastic limit or yield point, for upon removal of the pressure or weight they regain their original shape and volume. Therefore, liquids and gases may be said to be perfectly elastic.

If a metal rod is bent and it regains its original form when the force is removed, the elastic limit has not been exceeded. If the bent rod does not fully regain its original from, the elastic limit has been exceeded. When considering the elasticity of a metal rod or wire, it may be said that up to the elastic limit the increase in length was in proportion to the weight applied; this is known as "Hooke's Law." This law may be defined as follows: "The stretch is proportional to the stretching or applied force." Stated as a formula, the elasticity of a substance is measured by the ratio of the stress divided by the strain.

When a weight or force is applied to a substance, the substance may change its shape or size. Such a change is known as a STRAIN. Up to the point where the elastic limit is exceeded, a force is generated within the substance that will restore the substance to its original shape and size when the external force or weight is removed. The amount of such a restoring force per unit of area is known as the STRESS. A stress is a FORCE and a strain is a DISTORTION; therefore, the elasticity may be measured by the ratio of the internal stress to the external strain.

If elasticity were perfect, this quantity would be the amount of force required to shorten or lengthen a piece of specified material an amount equal to its original length, its cross section having a unit area. A unit area means an area of one square inch or other square measurement.

Since metals are not perfectly elastic, the MODULUS OF ELASTICITY must be determined by comparison. For example, consider a steel bar 5 inches long subjected to the force of 50,000 pounds per square inch, and that is thereby elongated (lengthened) 0.10 of an inch. By using the amount of force necessary to produce an elongation of 0.10 of an inch—(50,000 pounds), the modulus of elasticity may be calculated. This is determined by using the stress in pounds per square inch as the dividend and the amount of elongation per inch of length as the divisor. Therefore, the formula is written as follows: (In the formula, the modulus of elasticity is represented by the letter E.)

$$E = \frac{\text{Stress in pounds per square inch}}{\text{Elongation in inches per inch}}$$

$$E = \frac{\text{50,000 pounds per square inch}}{\text{0.02 inch per inch}}$$

$$E = \text{25,000,000 pounds per square inch}$$

Therefore, if the piece of steel bar tested were perfectly elastic, and if we continued to elongate the 5-inch test bar until it was exactly

10 inches long, the stress at that time would have to be 25,000,000 pounds per square inch.

We may occasionally see the term ELASTIC AFTER-EFFECT. This term is applied to elasticity when it takes some time to become apparent. For example, during the cooling of a casting, strains are set up in the metal, due to the varying thicknesses of sections of the casting. When the outside layer or skin of metal is removed by machining in the machine shop, the strains which are set up in the metal are suddenly released causing the casting to warp. If the casting is allowed to SEASON for a period of time after the outer layer is removed, the strains will neutralize themselves and act normally. The strains set up in the casting would eventually neutralize themselves without the removal of the outer layer or skin, but the machining will tend to hasten the process.

Stress is not the same thing as load. The load is the external applied force, while the stress is the internal force with which the material resists the applied force. However, the stress times the working cross-sectional area is EQUAL TO the load. Why? Newton's third law of motion states that "To every force or action there is always an equal and opposite reaction." Stress, therefore, is the "equal and opposite" reaction to the applied load. Thus, the same unit of measurement is used for both load and stress. In most engineering applications, the unit of measurement is pounds per square inch; however, in some cases it is more convenient to use pounds per square foot, tons per square foot, or some other unit.

Stress is always "equal and opposite" to the applied load, and we have seen why stress times the working cross-sectional area is numerically equal to load. When we say that stress is OPPOSITE to load, we mean that the internal force (stress) acts in a direction that opposes the load. To understand this more fully, we will need to see what causes stress.

Stress occurs because molecular forces within the material resist the change of shape that an applied load tends to produce. In other words, stress results from the resistance of the molecules to being shifted around, pulled apart, or squeezed together. Because stress involves molecular forces, a piece of metal that is subjected to a load develops an enormous number of stresses, rather than just one stress. To visualize these stresses, imagine trying to draw a picture or diagram in which you use arrows to indicate the molecular forces of attraction and repulsion between each molecule and all the other molecules around it. If you had more than a very few molecules, you would have to draw thousands or perhaps millions of arrows to indicate all the molecular forces involved. For the sake of simplicity, therefore, we often speak of stress as though it were one internal force, acting in one direction—that is, the direction opposite to the direction of the applied load. In other words, we consider the TOTAL EFFECT of all the molecular stresses, rather than trying to consider each set of molecular stresses separately.

The manner in which the load is applied determines the type of stress that will develop. Applied forces are usually considered as being of three basic kinds: tension (or tensile) forces, compression forces, and shearing forces. The basic stresses, therefore, are tension (or tensile) stresses, compression stresses, and shearing stresses. Complex stresses such as bending stresses and torsional stresses are combinations of two or more of the basic stresses.

TENSION STRESSES are developed when a material is subjected to a pulling action. If, for example, a cable is fastened to an overhead beam and a weight is attached to the free end, tension stresses are developed within the cable. The tension stresses resist the tension forces that tend to pull the cable apart. Figure 10-6 shows tension forces and the resulting "equal and opposite" tension stresses.

COMPRESSION STRESSES develop within a material to oppose the forces that tend to compress or crush the material. A column that supports an overhead weight is said to be in compression, and the internal stresses that develop within the column are compression stresses. Figure 10-7 illustrates compression forces and compression stresses.

SHEARING STRESSES are developed within a material when opposite external forces are applied along parallel lines in such a way as to tend to cut the material. Shearing forces tend to separate material by sliding part of the material in one direction and the rest of the material in the opposite direction. The action of a pair of scissors is an example of shear forces and shear stresses. The scissors apply shear forces, and the material being cut resists the shear forces by its internal shear stresses. Forces tending to produce shear in a rivet are illustrated in figure 10-8. Shear stresses are not shown,

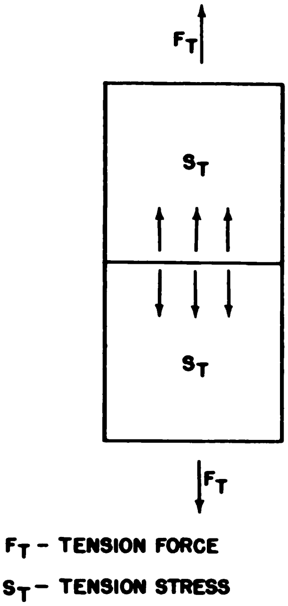

11.23
Figure 10-6.—Tension forces and tension stresses.

since they are considerably more complex than tension stresses and compression stresses.

BENDING STRESSES develop when a material is subjected to external forces that tend to bend it. When a load is applied to a beam, for example, as shown in figure 10-9, the upper surface is in compression and the lower surface is in tension. The NEUTRAL AXIS, indicated by the broken line in figure 10-9, is neither in compression nor in tension.

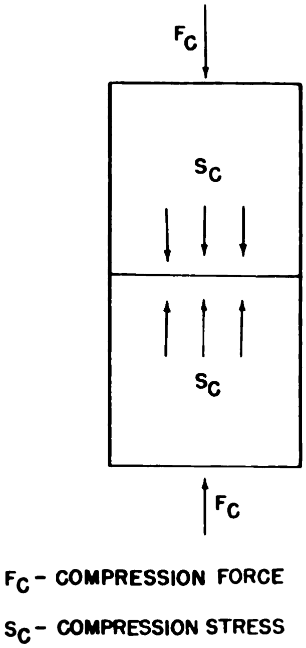

11.24
Figure 10-7.—Compression forces and compression stresses.

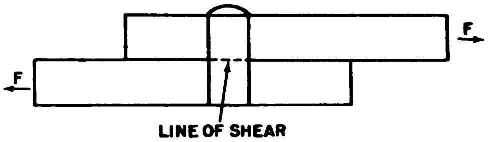

11.25
Figure 10-8.—Shearing forces applied to a rivet.

TORSIONAL STRESSES are developed in a material when external forces are applied in such a way that they tend to produce rotation. A ship's shaft, for example, rotates when the external applied forces are greater than the internal torsional stresses developed in the shaft. Torsional stress is primarily a special form of shear stress, although it may also involve some compression stress and some tension stresses.

Materials that can withstand extensive permanent deformation without breaking or rupturing are said to be highly plastic. Note the use of the word "permanent" in this statement; the term PLASTIC DEFORMATION is used to indicate a PERMANENT change of shape. Modeling clay is an example of a highly plastic material, since it can be deformed extensively and permanently without rupturing. Clay could scarcely be called tough, however, even though it is highly plastic.

Plasticity is in some ways the opposite of brittleness and in other ways the opposite of elasticity. A material that is brittle will break without showing any visible deformation; consequently, such a material is not very plastic. A material that is highly elastic will return to

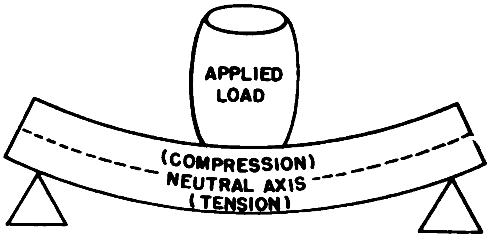

11.26
Figure 10-9.—Load applied to a beam.

its original shape and size after strain; consequently, such a material does not show a high degree of plasticity (below the elastic limit for the substance). Most metals are elastic, rather than plastic, up to the elastic limit; above the elastic limit, they tend to have the property of plasticity.

Plasticity, like many other properties, is a relative thing. To some degree, all substances are plastic. Even glass, which is sometimes mentioned as the perfect example of a nonplastic material, is plastic if an external force is applied to it very slowly. If you want to demonstrate this to yourself, take a sheet of glass and lay it in a horizontal position in such a way that it is supported only at the ends. Then put a small but heavy weight in the middle of the glass. After several days (or possibly weeks, depending upon the kind of glass you use) you will be able to observe a visible deformation of the glass.

The substance known as "Silly Putty" is an even better example of the relative nature of the property of plasticity. When you press or mold "Silly Putty," it is more plastic than secondhand chewing gum; throw it against the floor, and it may either bounce like a rubber ball or break into pieces; hit it sharply with a hammer, and it will shatter almost like glass.

The properties known as ductility and malleability are special cases of plasticity. DUCTILITY is the property that makes it possible for a material to be drawn out into a thin wire—or, in other words, it is the property that enables the material to withstand extensive permanent deformation from TENSION. MALLEABILITY is the property that makes it possible for a material to be stamped, hammered, or rolled into thin sheets—in other words, a malleable material is one that can withstand extensive permanent deformation from COMPRESSION.

Most metals that exhibit one of these properties also exhibit the other. However, this is not always true. Lead, for example, is very malleable (it can be permanently deformed in compression without breaking) but it is not ductile (it cannot be permanently deformed in tension to any great extent).

Strength is the property that enables a material to resist deformation. ULTIMATE STRENGTH is the maximum stress which a material is capable of withstanding in tension, compression, or shear. TENSILE STRENGTH, or the ultimate strength of a material in tension, is the term most frequently used to describe the strength of a material. In a tensile strength test, increasingly heavy loads are applied up to the point where the material experiences its maximum stress. At this point the load is reduced but the material continues to elongate; necking begins, and the material eventually breaks. Tensile strength is computed by dividing the MAXIMUM load applied during the tension test by the original cross-sectional area of the specimen being tested.

$$\text{TS} = \frac{\text{Load (pounds)}}{\text{Area (square inches)}}$$

$$= \text{Tensile Strength (psi)}$$

Some materials are equally strong in compression, tension, and shear. However, many materials show marked differences. For example, cured portland cement has an ultimate strength of 2000 psi in compression but only 400 psi in tension. Carbon steel has an ultimate strength of 56,000 psi in tension and in compression, but an ultimate strength in shear of 42,000 psi. When dealing with ultimate strength, therefore, the kind of loading (tension, compression, or shear) should always be stated.

If a material is stressed repeatedly, in a cyclical manner, it will probably fail at a loading that is considerably below its ultimate strength in tension, compression, or shear. For example, you can break a thin steel rod with your hands, after it has been bent back and forth several times in the same place, although you could not possibly cause an identical rod to fail in tension, compression, or shear merely from force applied by hand. This tendency of a material to fail after repeated stressing at the same point is known as FATIGUE.

The property of HARDNESS has been defined as the ability of a material to resist penetration. Because there are several methods of measuring hardness, the hardness of a material is always specified in terms of the particular test that has been used to measure this property.

To get a simple idea of the property of hardness, consider lead and steel. You can scratch lead with a pointed wooden stick, but you cannot scratch steel with such a stick. Steel is harder than lead.

TOUGHNESS is the property that enables a material to withstand shock, to endure tensile stresses, and to be deformed without breaking. Another way of expressing this is to say that a tough material is one which can absorb a lot of energy before breaking. Toughness does not exist in metals that do not have high tensile strength; however, metals that are both strong and hard tend to be less tough than metals that are softer and have less tensile strength. Toughness is definitely related to the property of plasticity; materials must be plastic in order to be tough.

We have already defined BRITTLENESS, indirectly, by saying that it is in some way the opposite of plasticity and in another sense the opposite of toughness. A brittle material is one that fractures before exhibiting any noticeable permanent deformation.

The term CREEP is used to describe a special kind of plastic deformation that occurs very slowly, at high temperatures, when the material is under a constant stress. It is interesting to note that this stress may be considerably less than the yield point of the material at room temperature. Because creep occurs very slowly (so slowly, in fact, that years are required to complete a single creep test), the importance of this type of plastic deformation has not been recognized until fairly recently. Creep-resisting steel is now used in most modern naval ships for high temperature piping.

The resistance which a material offers to fracture from a suddenly applied load is known as SHOCK RESISTANCE or IMPACT RESISTANCE. In general, the shock resistance of a material is dependent upon its toughness. Tempering often improves the shock resistance of a material; some other forms of heat treatment tend to reduce shock resistance. Marked changes in the surface of a material—scratches, cracks, notches, inclusions, or sudden bends—tend to put the material under unequal stresses and so decrease the shock resistance of the material.

The THERMAL CONDUCTIVITY of a substance is the measure of the ability of the substance to conduct heat. Thermal conductivity is expressed numerically, but you have to be cautious about trying to interpret the number until you know what definition was followed in arriving at the number. Several definitions are commonly used, including:

1. Thermal conductivity is the quantity of heat (in Btu) that flows during 1 hour through a piece of material that is 1 square foot in area and 1 FOOT thick, when there is a 1° F difference in temperature between the two faces.

2. Thermal conductivity is the quantity of heat (Btu) that flows during 1 hour through a piece of material that is 1 square foot in area and 1 INCH thick, when there is a 1° F temperature difference.

3. Thermal conductivity is the quantity of heat that flows during 1 hour through a 1-inch cube when there is a 1° F temperature difference.

As you can see, the number used to indicate the thermal conductivity of any substance cannot be the same in all of these definitions. Consequently, it is important to notice the way in which thermal conductivity is defined before accepting a numerical value for this property.

Thermal conductivities should also be specified in terms of the temperature at which the conductivity test is made, since the temperature definitely affects this property. In general, the thermal conductivity of metals decreases as the temperature increases. For example, the thermal conductivity of pure iron is 39.0 at 64° F but is 36.6 at 212° F (by the first definition of thermal conductivity). However, in some metals there is an increase in thermal conductivity with an increase in temperature. The thermal conductivity of aluminum is 117 at 64° F but it is 119 at 212° F (again, by the first definition). Most metals have high thermal conductivity, as compared with nonmetallic substances.

CORROSION RESISTANCE is the ability of a material to withstand surface attack by the atmosphere, fluids, moisture, and acids. Some metals are highly resistant to practically all types of corrosive agents, others to some types of corrosive agents, and still others to only very few types of corrosive substances. Some metals, however, can be made less susceptible to corrosive agents by coating or by alloying them with other metals that are corrosion resistant.

HEAT RESISTANCE is the property of a metal which retains strength or hardness at high temperatures. This is particularly true of some types of alloy steels. A metal that retains its strength or hardness at elevated temperatures is called heat resistant. Tungsten steel (even when red-hot can be used to cut other metals) and carbon-molybdenum steel (which is used for piping and valves in high temperature, high pressure steam systems) are examples of heat-resistant metals.

As previously stated, certain properties and characteristics of metals and alloys which are not properly classified as mechanical, physical, electrical, or chemical properties are sometimes referred to as engineering properties. In general, these certain properties are really based on the combinations of other properties rather than being properties in themselves. The properties that are of concern to the Molder are machinability, weldability, formability, and castability.

MACHINABILITY is the term used to describe the ease with which a metal may be turned, planed, milled, or otherwise shaped in the machine shop. Some metals are not easily machined because they are too hard. Some soft metals are not easily machined because they are too tough.

There are no hard and fast rules that can be used in determining the machining characteristics of a metal. Many factors, such as the composition of the metal, the manufacturing process, and heat treatment, have considerable effect on the machinability of a metal. Relatively small changes in any one of these factors may cause excessive change in the machinability characteristics of the metal. For example, an increase of one of the elements in the composition can increase or decrease machining characteristics; differences in temperatures and rates of cooling used in heat treatment can change the metal from hard to soft, or vice versa; hot or cold working or casting in the manufacturing process can change the machinability characteristics by changing the internal structure of the metal.

The term WELDABILITY refers to the capacity of a metal or alloy to be fabricated by a welding process into a structure that will perform satisfactorily in service. Weldability is a relative term that expresses the degree of simplicity or complexity of procedures and techniques necessary to produce a sound weld.

Some metals are easier to weld than others. Low carbon steel, for example, is easier to weld than aluminum. We say that low carbon steel has a high degree of weldability, as compared to aluminum. This does not mean that aluminum cannot be welded; it can be welded if the proper process is used and if definite preparatory steps are taken to ensure a sound joint.

Most of the common metals and alloys are weldable to some degree by one or more of the various welding processes. However, all metals are not equally weldable by any one process; and a few metals are so difficult to weld by any process that they are considered as being unweldable for all practical purposes.

FORMABILITY is the property of a metal or alloy which allows it to be easily formed by such processes as forging, swaging, rolling, etc.

CASTABILITY is the property which allows a metal to flow freely and evenly into a mold and to fill it before such freezing occurs as would offer an obstruction to its further flow. Castability is sometimes referred to as FLUIDITY, RUNNABILITY, FLOWING POWER, or FLUID LIFE.

DENSITY of a metal is its weight per specified cubic measurement. The densities in table 10-1 are expressed as fractions of pounds per cubic inch. A cube of carbon, for example, measuring 1 inch along each edge, weighs 0.08 pound. You will see densities given in terms of pound per cubic foot; the latter are arrived at by multiplying pound per cubic inch by 1728, which is the number of cubic inches in a cubic foot.

SPECIFIC GRAVITY of any metal is the numerical ratio of the weight of a given volume of that metal to the weight of an equal volume of water. The specific gravities given in table 10-1 were derived by computing the ratios between the weight of a cubic inch of water and the weights per cubic inch of the other elements in the table. (The figures for specific gravities may vary in different texts, but the variation will be so slight as to be negligible.)

Comparison of the weights of different metals is usually given in terms of specific gravities, although it may also be expressed in terms of densities, since the specific gravity of a metal depends on its density. In addition to being a ready means of comparing relative weights, specific gravity has other practical applications.

Suppose you have a No. 70 crucible. You know from the discussion in chapter 4 that this crucible has a capacity of 32 pounds of water. You have been shown how, with a knowledge of the specific gravity of the metal that you are working with, you can compute the capacity of the crucible in terms of that metal.

Again, suppose you want to know the weight of aluminum per cubic foot. You look in table 10-1 and read that its specific gravity is 2.7; multiply the weight of a cubic inch of water by this specific gravity figure, and also by 1728 (to convert to cubic feet) and you will obtain the answer, 168 pounds, as the weight of aluminum per cubic foot. An even simpler method is to take the density figure (pound/cubic inch) for aluminum from table 10-1 and multiply it by 1728.

The MELTING POINT is the temperature at which a pure metal, a compound, an alloy, or an eutectic changes from a solid to a liquid. It is the temperature at which the liquid and the solution are in equilibrium. The melting point of a single element (see table 10-1) when melted alone will be different from its melting point when it is combined with other elements (see table 10-8). For example, when copper (1981° F), tin (449° F), lead (621° F), and zinc (787° F) are combined to make an alloy known as leaded red brass or commonly known as 85-5-5-5, the melting point will be in the range of 1810° F to 1840° F.

Notice that the melting points given in tables 10-1 and 10-8 show that there may be a slight range on both the upper and lower side of the temperatures given; melting may take place anywhere within this range. For some elements and alloys, this range may be so small as to be negligible, but the ranges for others are conspicuously wide.

The melting points of the elements, metals, and alloys have been determined by experimentation and converted into tables. These tables and calculations vary in different texts, but the variations will be slight.

The BOILING POINT is the temperature at which molten metal bubbles (becomes agitated or excited) as it changes to a vapor. (See table 10-1).

The temperature at which a metal or alloy can be poured into a mold cavity is called the POURING TEMPERATURE. Because castings vary in size and shape, there is actually not one temperature but a RANGE of temperatures within which any metal or alloy can be poured. Therefore, the term POURING RANGE or the term CASTING TEMPERATURE RANGE has more meaning to the Molder than the term pouring temperature. (See table 10-8.)

CLASSIFICATION OF METALS

The metallic materials with which you will work are divided into two groups: the ferrous metals, and the non-ferrous metals. A ferrous metal is composed principally of iron; in this classification are all the carbon and alloy steels, as well as pig iron, cast iron, wrought iron, and ingot iron. All other metals (lead, zinc, tin, copper, brass, nickel, aluminum, and aluminum alloys) are included in the nonferrous classification.

In many Navy foundries, metal stockpiles include both ferrous and nonferrous alloys. These alloys make it easier for the Molder to produce castings with a composition that is within the specified limits. Unlike the Shipfitter and Machinery Repairman, who are concerned chiefly with shaping and machining existing metal stocks, the Molder's work may call for an alteration of the chemical composition of a metal. When basic alloys are available to him, it often simplifies the work involved in producing a particular casting alloy.

Among the ferroalloys that are available at most Navy foundries are ferrochromium, ferromanganese, ferromolybdenum, ferrophosphorus, and ferrosilicon. Special steels of low carbon content call for the use of ferrochromium; medium-carbon ferromanganese is also used in the manufacture of steels, and the low-carbon grade is used in high-grade aluminum and nonferrous castings. When thin sections of gray iron castings must be poured, ferrophosphorus is used to increase the phosphorus content. Ferrosilicon can be used as a deoxidizing agent.

Ferrous Metals

IRON may be supplied to the foundry in the form of pig iron, ingots, or wrought iron. Pig iron, which is about 93 percent iron, 3 to 5 percent carbon, and has varying amounts of other elements. Its low tensile strength and its brittleness limit its uses.

Ingot iron is 99.9 percent pure iron. It derives its name from the fact that it is cast into ingots, which are later rolled into sheets and sheared to desired sizes. Molders use 2-in. squares of ingot iron, about 3/16 inch thick, to produce low-carbon steel castings.

In chemical composition, structure, and properties, ingot iron is practically the same as dead soft steel; actually, the lowest-carbon steel has a carbon content only 0.06 percent higher than the carbon content of ingot iron. But whereas in steel the carbon content is considered an alloying element, in ingot iron it is considered an impurity.

Wrought iron is manufactured by a puddling, squeezing, and rolling process that introduces slag into the iron. This is the explanation of the fibrous internal structure that gives wrought iron its workability and its resistance to corrosion. The chemical analysis of wrought iron shows that it has about the same elements as are found in mild steel; but the properties of these two metals differ because of differences in the manufacturing processes.

STEEL is basically an alloy of iron and carbon, with other alloying elements added to produce a desired composition. Although you will often hear steel referred to by the names of the various manufacturing processes (Bessemer, Open Hearth, Crucible), for your purpose the best method of classification is according to the alloying elements. You will also find that steel is classified according to shape or form (castings, forgings, plates, sheets, tubing). The Molder uses steel chiefly in the form of scrap, to which ferroalloys are added for the production of steel castings.

In the manufacture of steel, the amount of carbon present in pig iron must be decreased, and impurities removed. Manganese is used, in the proportion of about 15 lb to a ton of pig iron. When this element is added, it combines with the sulfur present to form manganese sulfide, and this serves to reduce the harmful effects of the sulfur. Steel is in a molten state during most of the manufacturing process, and when poured it solidifies into a granular structure, as opposed to the fibrous structure of wrought iron.

The plain carbon steels are true alloys of iron and carbon, but they are seldom referred to as alloys. They are frequently distinguished according to the percentage of carbon which they contain, and the term alloy steel is reserved for those steels that contain alloying elements other than carbon. The most commonly used of these alloying elements are: chromium, nickel, silicon, tungsten, and vanadium.

The carbon steels are high-carbon, with 0.60 percent or more carbon present; medium steel, with from 0.30 to 0.60 percent carbon content; and mild steel, with from 0.05 to 0.30 percent carbon.

Other structural steels contain small additions of alloying elements that give added hardness and toughness to the finished steel. High tensile steel, for example, is so tough that a drill or cutting torch must be used to punch holes in it. Special Treated Steel (STS), which contains a small percentage of chrome-nickel, must be cut with a torch. Stainless steel (CRES) is an alloy that possesses a high degree of resistance to corrosion. In appearance it resembles Monel, but the latter is a nonferrous alloy.

The nickel-steels usually contain from 3 to 5 percent nickel, and this alloying element serves to increase strength, give greater toughness, and improve resistance to corrosion.

The addition of chromium to steel gives added resistance to wear. Roller bearings, which must be wear resistant, are often made of chromium steel which contains 1 percent chromium and 1 percent carbon.

Chrome-vanadium steels contain from 0.15 to 0.25 percent vanadium, from 0.60 to 1.50 percent chromium, and from 0.10 to 0.60 percent carbon. This combination of elements gives the steel maximum strength combined with minimum weight.

Tungsten is added to steel to give it the quality of redhardness—that is, the ability to remain hard even when it has become red hot. The alloying elements are from 13 to 19 percent tungsten, from 1 to 2 percent vanadium, 3 to 5 percent chromium, and 0.60 to 0.80 percent carbon. This type of steel is expensive to produce, and is used only for the highest grade cutting tools. A cheaper grade of high-speed steel can be produced by using molybdenum in combination with chromium and nickel.

From the above, it is apparent that the only "pure" or unalloyed ferrous metal is ingot iron. However, this pure, ferrous material is seldom used in the Navy foundry. The ferrous foundry materials you will most frequently use are pig iron, scrap steel, and a group of alloys known as FERROALLOYS. In this latter group of metallic materials, certain elements used in the production of cast irons and steels are already combined with a certain percentage of iron. One kind of ferrosilicon (FeSi), for example, contains approximately 50 percent silicon and 50 percent iron, plus traces of carbon, phosphorus, and sulfur.

Samples of the common ferroalloys are shown in figure 10-10. The uses of these materials in the production of iron and steels are indicated in table 10-3.

NONFERROUS ALLOYS

Recent trends in the Navy call for an increasing use of copper-base, aluminum-base, and other nonferrous alloys. The most important of the nonferrous metals used aboard ship, and the special properties of each type of metal, are briefly summarized in this section.

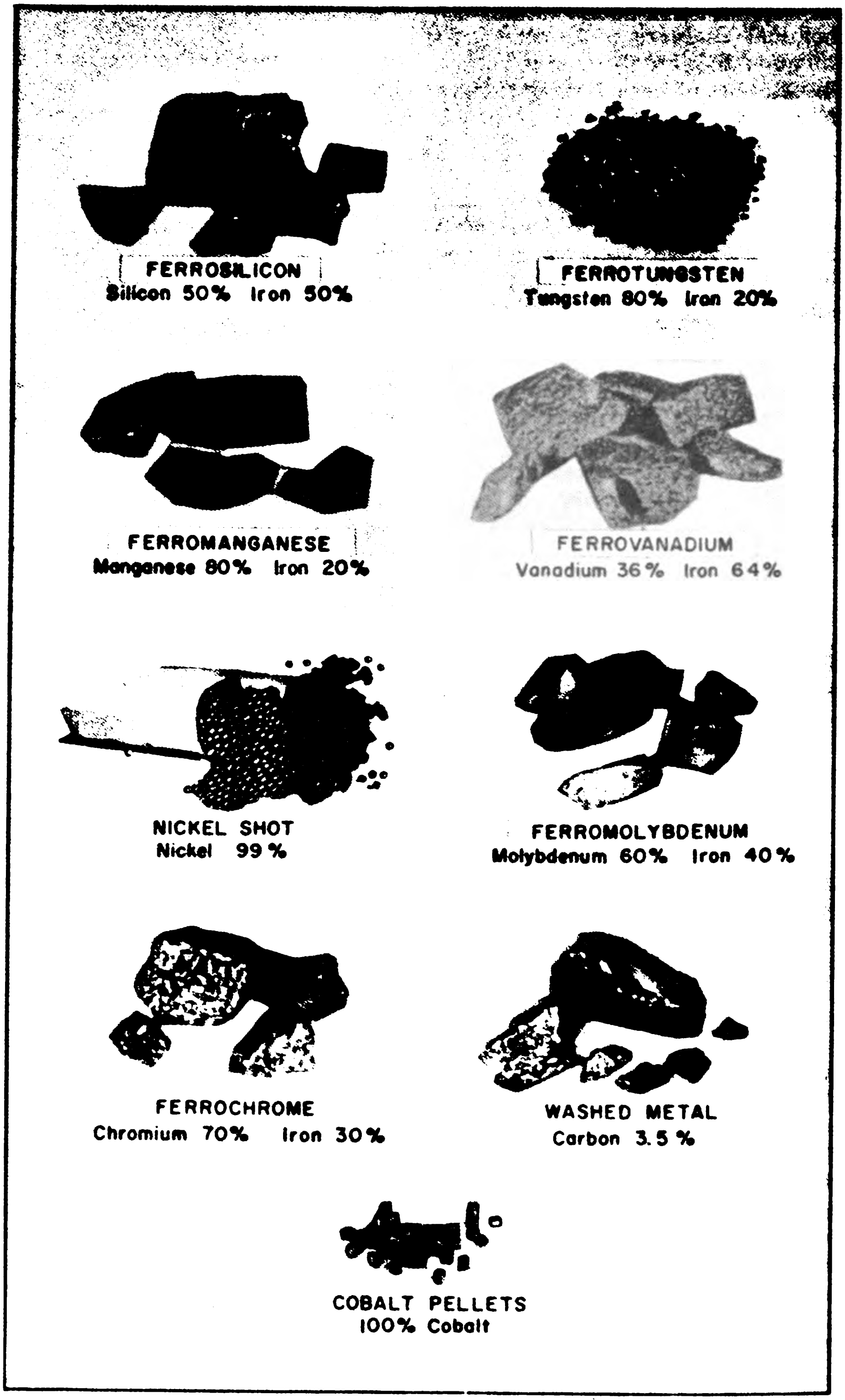

102.8

Figure 10-10. —Ferroalloys used in the foundry.

Table 10-3.—The Form and Use of Metals for Founding.

Material	Specification	Grade or Class	Form	Size	Use
Aluminum	N: 46-A-2	1	Ingot	Commercial	Metal suitable for making aluminum castings and, with suitable alloy additions, as a base for various aluminum alloys; also for making aluminum additions in the manufacture of aluminum bronze and other alloys.
Aluminum Alloy	N: 46-A-5	2	Ingot	10-pound	In manufacture of aluminum alloy castings of corresponding classes covered by Spec. N: 46-A-1.
Antifriction Metal	N: 46-M-2	2	Ingot	10-pound	A hard, ductile, babbitt metal for all bearings where high-grade, white metal alloy is required.
Antimony	MIL-S-893	......	Ingot or Slab	43-pound	Primarily in manufacture of antifriction metal (babbitt).
Bronze (Navy M)	N: 46-B-25	I	Ingot	20-pound	In manufacture of valve-bronze castings covered by Spec. N: 46-B-8.
Bronze (Manganese)	N: 46-B-25	V	Ingot	20-pound	In manufacture of manganese-bronze castings covered by Spec. N: 49-B-3.
Copper	N: 46-C-5	A	Ingot or Pig	20-pound	"Prime electrolytic" copper. For the manufacture of high-grade bronzes and brasses.
Copper (Phosphor)	QQ-C-571	A	Shot	1/2"-mesh	For deoxidizing bronzes.
Ferrochromium	QQ-F-151	B	Lump	Commercial	In the manufacture of special steels and alloys requiring low carbon content. (Low carbon, 0.10% max.)

Table 10-3.—The Form and Use of Metals for Founding—Continued

Material	Specification	Grade or Class	Form	Size	Use
Ferromanganese	QQ-F-161	A	Lump	Commercial	Low carbon and low iron. In manufacture of high-grade aluminum and nonferrous castings.
Ferromanganese	QQ-F-161	B	Lump	Commercial	High carbon, commercially called standard ferromanganese. In manufacture of cast irons and steels.
Ferromanganese	QQ-F-161	C	Lump	Commercial	1.50% max. carbon, commercially called medium-carbon ferromanganese. In manufacture of steels.
Ferromolybdenum	QQ-F-171	B	Lump	1-inch or 20-mesh.	In manufacture of many iron and steel alloys. (Low carbon.)
Ferrophosphorus			Screened	10-mesh	To increase the phosphorus content of gray iron, where necessary to pour thin sections.
Ferrosilicon	QQ-F-181	A	Screened	20-mesh	For deoxidization, and alloy additions in manufacture of ferrous alloy castings.
Ferrosilicon	QQ-F-181	D	Lump	Commercial	For deoxidization, and alloy additions in manufacture of ferrous alloy castings.
Ferrotitanium	QQ-F-191	A	Screened	20-mesh	As a scavenger to remove oxygen and nitrogen in manufacture of steels.
Foundry Iron	QQ-I-676	P	Pig	50-pound	For general casting purposes when low-phosphorus content is not essential (0.3 phos. max.).
Lead	QQ-L-171	A	Pig	80 - to 110-pound.	99.9% minimum lead for the manufacture of foundry alloys.

Table 10-3.—The Form and Use of Metals for Founding—Continued

Material	Specification	Grade or Class	Form	Size	Use
Magnesium	N: 46-M-10		Stick	12" length, 1.3" diameter.	For alloying and deoxidizing. (12 inch length.)
Nickel-Copper Alloy	Mfg. Norfolk Naval Shipyard.		Ingot	5-pound	In manufacture of nickel-copper alloy (Monel) castings covered by Spec. N: 46-M-1.
Nickel	QQ-N-301	B	Cube	Commercial	For alloying purposes.
Nickel	QQ-N-301	B	Shot	8- to 10-mesh	For alloying purposes.
Tin	QQ-T-371	A	Pig	Commercial	In manufacture of foundry alloys. (99.85% min. tin.)
Zinc	QQ-Z-351	A	Slab	60-pound	In manufacture of high-grade nonferrous alloys.

COPPER is used in the foundry in the form of 20-lb ingots. Ingot copper is 99.95 percent pure copper, and is easy to work. It becomes hard when worked, but if necessary, it can be softened again by heating to cherry red and then cooling. Copper has two outstanding properties: it is an excellent conductor of electricity, and it has a high degree of resistance to salt water corrosion.

ZINC is used in the foundry chiefly as an alloying element in making brass or bronze. In its unalloyed form, its chief use is as zinc plates or protectors, used to prevent corrosion of the steel hull, or of bronze bearings, shafts, or propellers. For a detailed discussion of the way in which zinc controls the corrosion caused by the electric current generated when two unlike metals are immersed in salt water consult chapters 12 and 46 of the Bureau of Ships Technical Manual, NavShips 250-000.

When you break up slabs of zinc, to use it as an alloying element, you will be able to see the large crystalline grain of its internal structure.

LEAD will probably be the heaviest metal you will handle. In the foundry, lead is usually in the form of 80- to 100-lb pigs. Normally, its surface is rather grayish; however, when scratched or scraped, the surface is silvery and crystalline. Lead is sometimes used in the manufacture of bearing metals and high-lead, bronze alloys. Also, when alloyed with various proportions of tin, common soft solders are formed.

TIN is a white, lustrous metal, having a faint blue tinge. It is seldom used except as an alloying element, in which capacity it has many important uses. The most important use of tin is in the production of bronzes and antifriction bearing metals. In this latter application, the tin content is often as much as 89 percent. For foundry use, tin is supplied in the form of pigs.

NICKEL is a white metal, commercially used in its pure form, but in the Navy it is used only as an alloying element. As an element in ferrous metals, it increases strength, machineability, and corrosion resistance. Used with copper in nonferrous alloys, it provides great strength, and excellent resistance to corrosion. Nickel-copper alloy containing 70 percent copper and 30 percent nickel is highly resistant to the chemical action of salt water. It is now used extensively aboard Navy ships for salt water piping. In sheet form it is used for small storage tanks and hot water reservoirs.

Nickel-copper alloy is frequently known as MONEL. This alloy contains from 60 to 68 percent nickel, about 30 percent copper, and small amounts of iron, manganese, and cobalt. It resembles stainless steel, both in appearance and in many of its qualities. Monel has unusually high corrosion-resistant properties; for this reason it is used in pump parts, turbine blades, cast valves, and other fittings that must resist corrosion.

MANGANESE in its pure state is stable in dry air, but is readily corroded when attacked by dilute acids. Your experience with it will be chiefly when it is used as an alloying element.

Bronze aluminum manganese is an alloy of relatively high tensile strength and has a high degree of resistance to salt water corrosion. It is used for engine framing, propeller blades, gears, worm wheels, and similar applications where strength and corrosion resistance are required.

ANTIMONY is another silvery-white metal, but distinguishable from magnesium because of its much greater weight. Like zinc, antimony is brittle and easily fractured. Its property of expanding slightly when it solidifies makes it a valuable compound in such alloys as type metal.

You will make use of antimony as an alloying element in bearing alloys and babbitts, but you will find that it has a detrimental effect upon brass, bronze, and aluminum alloys. Exercise care when working with this metal, for all its compounds, including its fumes, are poisonous.

ALUMINUM is a metal that is being increasingly used aboard ship, because of its light weight, easy workability, good appearance, and other desirable qualities. In its pure form, aluminum is corrosion-resistant, but it has only about one-fourth the strength of steel. It is therefore seldom used in its unalloyed form.

MAGNESIUM is a lightweight, silvery-white metal, chiefly used by Navy Molders as an alloying element in aluminum alloys. It is also used as a deoxidizing agent in the manufacture of monel. It is available in ingot form, but more frequently comes in the form of sticks about 1 inch in diameter and 12 inches long.

With the addition of silicon, copper, magnesium, nickel, iron, and manganese, in specified proportions, it is possible to produce aluminum alloys that are stronger than mild steel. Most of these alloys, however, contain at least 90 percent aluminum; some wrought aluminum is of 99.0 percent purity. These alloys are not nearly as corrosion-resistant as the pure aluminum, and will soon corrode unless properly protected.

There are now so many different aluminum alloys that they are designated by numbers. Each identifying number consists of 4 digits. A letter prefixed to a 4-digit designator indicates an experimental alloy; a suffix consisting of the letter T, or T and a digit, indicates heat treatment; a letter B at the end of a designator indicates that the metal is a casting alloy.

In a 4-digit designator for a wrought aluminum or a wrought aluminum alloy, the first digit indicates the major alloying element. The elements have been assigned numbers as follows:

Copper	2
Manganese	3
Nickel	4
Magnesium	5
Silicon	6
Zinc	7

If the first digit is 1, the metal is 99.0 percent (or more) pure aluminum.

When a wrought aluminum designator begins with 1, the last two numbers indicate the percent of aluminum in excess of 99 percent. Thus, 1085 indicates that the metal is 99.85 percent pure aluminum. The second number in the designator indicates special control of one or more impurities. The zero in second position (as in 1085) indicates no special control. In the designators used for the aluminum alloys, the last two digits are the number used to designate that alloy under the system formerly used.

ANTIFRICTION METAL is the standard Navy white-metal babbitting material. This tin-base bearing alloy is supplied in 10-pound ingots. It is made available in the alloyed form to ensure that when the Molder pours these bearings, his production will possess consistently good properties, and there will be a minimum of variation between bearings.

COPPER-BASE ALLOY ingots, such as gun metal or valve bronze, are used in Navy foundries for remelting purposes. One type of bronze is used for general-purpose castings, where these castings are not subjected to high stresses nor to temperatures above 425° F. Since this type of bronze is corrosion resistant, it is frequently employed for making hose couplings, and low and medium pressure valves. The second type is a manganese bronze that produces castings having a high tensile strength and excellent resistance to salt water corrosion. This is the type of bronze used for propellers, hubs, and worm wheels.

PHOSPHOR-COPPER ALLOY is used exclusively in the production of bronzes. The high phosphorus content (14 percent) of this material serves as a deoxidizing agent. Although phosphor-copper is also available in 15- to 20-pound slabs and ingots, it is usually supplied in the form of 1/2-inch diameter shot.

IDENTIFICATION OF METALS

Most of the information that has been given to you so far in this chapter is the type of knowledge that could be determined only by laboratory experiment and research. With this data, you can obtain a piece of steel, aluminum, or nickel alloy from the supply department, and feel assured that you know a great deal about its internal structure and its properties.

Many metals and alloys, however, are so similar in appearance and weight that it would be impossible to distinguish one from another.

However, although you know a good deal about the internal structure from the name of the metal, you will not have the special equipment and facilities for identifying, from its internal structure, an unnamed metal. At the same time, distinguishing between metals that are similar in appearance and weight is frequently necessary for any Navy man who works with metals.

SYMBOLS

We may not realize it but Molders use something from the ancient world everyday—symbols.

SYMBOLS for many of the commonly used metals are taken from the Latin counterpart of their English name; for example, iron and copper. The symbol for iron is *Fe*, which is the first two letters of the Latin *ferrum*. Another example is copper, whose symbol is *Cu*, from the Latin *cuprum*. Not all symbols for metals originated from Latin, but whether they did or not you should be familiar with these symbols.

Metallic elements, metalloids, and nonmetals all have their identifying symbols, by which they are known to the chemist, the engineer, and the metallurgist. The Molder also will find these symbols helpful to know; they provide a sort of shorthand in keeping records and in calculating charges, and they are used in the written specifications to which he must often refer.

Symbols are just one of a number of things that the Molder needs to know about metals. In addition to symbols, a Molder needs (1) a knowledge of the characteristics and properties of metals and (2) an ability to identify one metal from another. Why does the Molder need this knowledge and skill? Because he selects precise amounts of specific materials and combines them in a furnace to produce an alloy that will do a particular job.

Table 10-1, page 195, lists the symbols for the more commonly used metals and elements. This table also includes such additional data as space lattice form, specific gravity, density, melting point, and the boiling point.

METAL TESTING

Of course, some metals can be identified by the experienced Molder by color, weight, and surface appearance. For example, it is a relatively simple matter to distinguish between copper and iron, or between aluminum and lead. In other cases—and this is particularly true of cast steel, structural steel, and tool steel—the metals look and feel alike, and have about the same weight, but there are significant differences between them.

It is important, therefore, that you know the simple and practical methods ordinarily employed for identifying the common metals and alloys used in foundry work. These identification tests are surface appearance, chip test, and spark test, the oxyacetylene test, the spark test, and tests for hardness.

Surface Appearance

Even when color is no help in distinguishing one metal from another, you may be able to observe distinctive marks on the metal surfaces, left there by the manufacturing processes. Cast and malleable iron usually show evidence of the sand mold; low carbon steel often shows forging marks; high carbon steel may show either forging or rolling marks.

The feel of the surface may provide you with another clue. Stainless steel is slightly rough in the unfinished state, but the unfinished surfaces of wrought iron, copper, brass, bronze, nickel, and Monel are smooth. Lead also is smooth, but has a velvety appearance.

Outside appearance will help you to roughly classify a metal, but a newly fractured or a freshly filed surface will offer you additional clues. You will find the information in table 10-4 a serviceable guide when you are trying to identify a piece of metal by its appearance.

Table 10-4.—Identification of Metals by Surface Appearance.

Metals	Color of unfinished, unbroken surface	Color and structure of newly fractured surface	Color of freshly filed surface
White cast iron	dull gray	silvery white; crystalline	silvery white
Gray cast iron	dull gray	dark gray; crystalline	light silvery gray
Malleable iron	dull gray	dark gray; finely crystalline	light silvery gray
Wrought iron	light gray	bright gray	light silvery gray
Low carbon and cast steel	dark gray	bright gray	bright silvery gray
High carbon steel	dark gray	light gray	bright silvery gray
Stainless steel	dark gray	medium gray	bright silvery gray
Copper	reddish brown to green	bright red	bright copper color
Brass and bronze	reddish yellow, yellow green, or brown	red to yellow	reddish yellow to yellowish white
Aluminum	light gray	white; finely crystalline	white
Monel metal	dark gray	light gray	light gray
Nickel	dark gray	off-white	bright silvery white
Lead	white to gray	light gray; crystalline	white

Chip Test

To make a chip test, you use a sharp, cold chisel to remove a small amount of metal from a sample. The ease with which the chipping can be done gives some indication of the kind of metal you are working with. The size, form, and color of the chips and the appearance of the edges (whether smooth or sawtoothed) give further clues.

You will not be able to identify metals by the chip test method until you have had considerable experience. You should practice with samples of known metals until you have learned how to identify carbon steel, carbon-molybdenum steel, chromium-molybdenum steel, chromium-nickel steel, and other metals. The information given in table 10-5 will help you to recognize some of the more common metals.

Oxyacetylene Torch Test

Metals may sometimes be identified by their characteristic reactions to being heated with an

Table 10-5.—Identification of Metals by Chip Test.

Metals	Chip Characteristics
White cast iron	Chips are small, brittle fragments. Chipped surfaces not smooth.
Gray cast iron	Chips are about 1/8 inch in length. Metal not easily chipped; therefore, chips break off and prevent smooth cut.
Malleable iron	Chips are from 1/4 to 3/8 inch in length (larger than chips from cast iron). Metal is tough and hard to chip.
Wrought iron	Chips have smooth edges. Metal is easily cut or chipped, and a chip can be made as a continuous strip.
Low carbon and cast steel	Chips have smooth edges. Metal is easily cut or chipped, and a chip can be taken off as a continuous strip.
High carbon steel	Chips show a fine grain structure. Edges of chips are lighter in color than chips of low carbon steel. Metal is hard, but can be chipped in a continuous strip.
Copper	Chips are smooth, with sawtooth edges where cut. Metal is easily cut. A chip can be cut as a continuous strip.
Brass and bronze	Chips are smooth, with sawtooth edges. These metals are easily cut, but chips are more brittle than chips of copper. Continuous strip is not easily cut.
Aluminum and aluminum alloys	Chips are smooth, with sawtooth edges. A chip can be cut as a continuous strip.
Monel	Chips have smooth edges. Continuous strip can be cut. Metal chips easily.
Nickel	Chips have smooth edges. Continuous strip can be cut. Metal chips easily.
Lead	Chips of any shape may be obtained because the metal is so soft that it can be cut with a knife.

oxyacetylene welding torch. Identifying factors include the rate of melting, the appearance of the molten metal and slag, and the color changes (if any) that occur during the heating. Table 10-6 indicates the reactions of various metals to the torch test.

Spark Test

In most shops and foundries, ferrous metals are identified by the spark test method. This test is made by holding a sample of the metal against a high-speed emery wheel. Either a stationary or a portable grinder may be used, and the grinding wheel should be rather coarse and very hard. Speed on the outer rim of the wheel should be at least 4500 fpm.

When the metal is held against the rapidly rotating wheel, small particles of the metal are torn loose so rapidly that they become red hot. The trajectory, or carrier line, that they follow as they leave the emery wheel is visible

Table 10-6.—Identification of Metals by Oxyacetylene Torch Test.

Metals	Reactions When Heated by Oxyacetylene Torch
White cast iron	Metal becomes dull red before melting. Melts at moderate rate. A medium tough film of slag develops. Molten metal is watery, reddish white in color, and does not show sparks. When flame is removed, depression in surface of metal under flame disappears.
Gray cast iron	Puddle of molten metal is quiet, rather watery, but with heavy, tough film forming on surface. When torch flame is raised, depression in surface of metal disappears instantly. Molten puddle takes time to solidify, and gives off no sparks.
Malleable iron	Metal becomes red before melting; melts at moderate rate. A medium tough film of slag develops, but can be broken up. Molten puddle is straw colored, watery, and leaves blowholes when it boils. Center of puddle does not give off sparks, but bright steel-like outside band does.
Wrought iron	Metal becomes bright red before it melts. Melting occurs quietly and rapidly, without sparking. There is a characteristic slag coating, greasy or oily in appearance, with white lines. The straw colored molten puddle is not viscous, is usually quiet but may have a tendency to spark; is easily broken up.
Low carbon and cast steel	Melts quickly under the torch, becoming bright red before it melts. Molten puddle is liquid, straw colored, gives off sparks when melted, and solidifies almost instantly. Slag is similar to the molten metal and is quiet.
High carbon steel	Metal becomes bright red before melting, melts rapidly. Melting surface has cellular appearance, and is brighter than molten metal of low carbon steel; sparks more freely, and sparks are whiter. Slag is similar to the molten metal and is quiet.
Stainless steels	Reactions vary depending upon the composition.
Copper	Metal has high heat conductivity; therefore, larger flame is required to produce fusion than would be required for same size piece of steel. Copper color may become intense before metal melts; metal melts slowly, and may turn black and then red. There is little slag. Molten puddle shows mirror-like surface directly under flame, and tends to bubble. Copper that contains small amounts of other metals melts more easily, solidifies more slowly, than pure copper.
Brass and bronze	These metals melt very rapidly, becoming noticeably red before melting. True brass gives off white fumes when melting. Bronze flows very freely when melting, and may fume slightly.
Aluminum and aluminum alloys	Melting is very rapid, with no apparent change in color of metal. Molten puddle is same color as unheated metal and is fluid; stiff black scum forms on surface, tends to mix with the metal, and is difficult to remove.
Monel	Melts more slowly than steel, becoming red before melting. Slag is gray scum, quiet and hard to break up. Under the scum, molten puddle is fluid and quiet.

Table 10-6.—Identification of Metals by Oxyacetylene Torch Test—Continued

Metals	Reactions When Heated by Oxyacetylene Torch
Nickel	Melts slowly (about like Monel), becoming red before melting. Slag is gray scum, quiet and hard to break up. Under the scum, molten puddle is fluid and quiet.
Lead	Melts at very low temperature, with no apparent change in color. Molten metal is white and fluid, under coating of thin, dull gray slag. At higher temperature, puddle boils and gives off poisonous fumes.

against a dark background. The lack of sparks, or the form that the sparks take, assist in identifying the metal. The length and the color of the spark stream are also identifying features.

Hardness Tests

Metals vary in their hardness—that is, their ability to resist penetration. This difference in hardness can be used for identification purposes. However, it has not been included in the foregoing section, because hardness tests are much more frequently employed to determine hardness after the properties of a metal or an alloy have been modified by some type of heat treatment.

There are two methods of determining hardness that the Molder Third Class or Second Class must be ready to employ; one method is the file test, the other is a machine test. File testing is not an exact method, but depends upon experience and judgment. Much greater accuracy is obtained by using a hardness testing machine. For many purposes, however, the file is adequate.

FILE TEST.—Take an ordinary mill file, and rub its teeth slowly over the metal surface to be tested. Maintain a firm hold on both the file and test piece, but do not use excessive pressure, and remove the file as soon as it bites into the metal. If the file bites into the metal easily, you know that the metal is soft. If the file slides over the metal surface, and produces no filings, or produces them with difficulty, you know that the metal is very hard. Intermediate hardnesses lie between these two extremes.

The file test is useful in testing the hardness inside of holes, in the bottoms of grooves, and on odd-shaped pieces that are inaccessible to machines. There will be times, too, when you will have to use the file test because no hardness-testing machine is available.

You can gain experience in the use of the file test by experimenting with a file on MASTER TEST BLOCKS. These blocks are pieces of metal whose exact hardness is known, and you train yourself to recognize different hardness values by working with these blocks. You can also compare the action of the file on the metal you are testing with the action of the file on a master block, to determine which block compares most closely with the metal being tested.

Speed, pressure, and the angle at which the file is held are factors in an accurate determination of hardness. Tests must be made at the same speed and pressure, if results are to be comparable. To ensure that tests are made at the same angle, use a vise for clamping the metal in position. Speed is really the dominant factor; too high a speed, by wearing the surfaces of file and metal, gives an impression of greater softness than is actually the case. A high speed combined with light pressure wears a surface more rapidly than low speed and heavy pressure. High speed and heavy pressure, of course, produces the greatest wear. You will find that the slower the speed of your stroke, the more accurate will be the results of the test.

MACHINE TESTS.—A number of different machine tests are available for measuring hardness in terms of the indentation made in a metal by a known testing load or pressure. The Rockwell, Brinell, and Vickers testing equipment are available aboard most repair ships and at most repair bases. The one most used, however, is probably the Rockwell tester. Then there is also the Scleroscope test, which, instead of measuring the area of indentation under a predetermined load, measures the rebound of a weight falling upon the test surface from a specified height.

When you are required to machine-test for hardness, you should consult the manufacturer's instruction for the equipment available, and follow the procedures as outlined.

The ROCKWELL HARDNESS TESTER has a penetrator formed of a commercial diamond ground to a cone of 120 degrees, and with a spherical point having a radius of 0.2 millimeter. Under a load of 150 kilograms the penetrator is pressed into the test surface. Nonferrous metals are usually tested under a 100 kilograms load, acting upon a steel ball 1/16 inch in diameter. The degree of penetration of the cone or the ball is read from a dial, which carries a B and a C scale. For hard steels tested with the cone penetrator, you should read the results on the C scale; for the steel ball, used on softer metals, read the B scale. The harder the metal, the higher will be the Rockwell number.

Figure 10-11 illustrates the use of a Rockwell testing machine.

The following procedure is the one substantially followed in making a Rockwell test:

1. Place the piece of metal to be tested on the anvil, or testing table (See part A of fig. 10-11.)
2. Turn the elevating wheel until the test metal comes into contact with the cone or ball (see part B of fig. 10-11), and continue to raise the specimen until the minor lead is applied, as indicated by the position of the small hand on the dial.
3. Set the dial zero behind the pointer; you can do this by turning the retainer flange on the dial face.
4. Release the weights that apply the load on the penetrator (or indenter, as it is labeled in fig. 5-6). To do this, flick the handle with one finger; this allows the load to be applied without any help. If you put pressure on the handle, you are likely to get an erroneous reading.
5. When the large pointer comes to rest, and the handle stops moving back, pull the handle forward to the starting position. (The pointer will change position on the dial, but this is a normal part of the test.)
6. Read the hardness number, just under the pointer, on the dial. Be sure to read from the scale that corresponds to the weight and kind of penetrator used. (See part D of fig. 10-11.) Then turn the elevating wheel to lower the anvil and release the test specimen.

The BRINELL TEST makes use of a hardened steel ball, subjected to a 3000 kilograms load for hard metals, and to a 500 kilograms load for soft metals. The diameter of the impression made in the test metal is read with a graduated microscope, and then the hardness number is determined by using a table of hardness numbers for given pressures and depression diameters.

The VICKERS TEST uses a method similar to that of the Brinell test, but the indenter is not a ball, but a square-based diamond pyramid, with an included angle of 136 degrees between opposite faces. The specimen is raised to within 1 millimeter of the indenter, which is then released. Rate of descent, and time in contact with the specimen, are automatically controlled. The square impression left by the indenter can easily be read across the diagonals, by using the graduated microscope attached to the instrument.

The SCLEROSCOPE TEST uses a miniature drop hammer of about 140 grains weight. When this hammer is let fall from a predetermined height to the test surface, it will rebound. A scale of hardness numbers is correlated with the height of rebound. This scale can be read for annealed materials, and for cold-worked materials.

SPECIFICATIONS FOR FOUNDRY METALS

In reading this chapter, you have learned something of the internal structure of metals, their physical properties, the practical tests by which they may be identified, and the usual methods of determining hardness, particularly in metals that have been given some type of heat treatment. You still need to know what metals and metal alloys are used for various shipboard installations.

This section includes a list of the ferrous and nonferrous metals used, the general purpose for which they are used, and the Navy Department specification number by which they may be identified. Table 10-7 presents this information. See the BuShips Foundry Manual, 1958 edition (ch. 13). You should not attempt to memorize this material, but use the table as a convenient reference. If you have access to the Bureau of Ships' General Specifications for Machinery for Vessels of the United States Navy, NavShips 451, you will probably find Section S1-0 (dealing with Materials, Workmanship, and Installation) very helpful.

Table 10-8 represents the conforming specifications for table 10-7. In addition to the cross reference to the specifications as listed in table 10-7, table 10-8 lists data on melting temperatures and casting temperatures for the Military Specification Number as well as the similar or equivalent specification number. As stated previously, these tables and calculations vary in different texts, but the amount of variation will be slight.

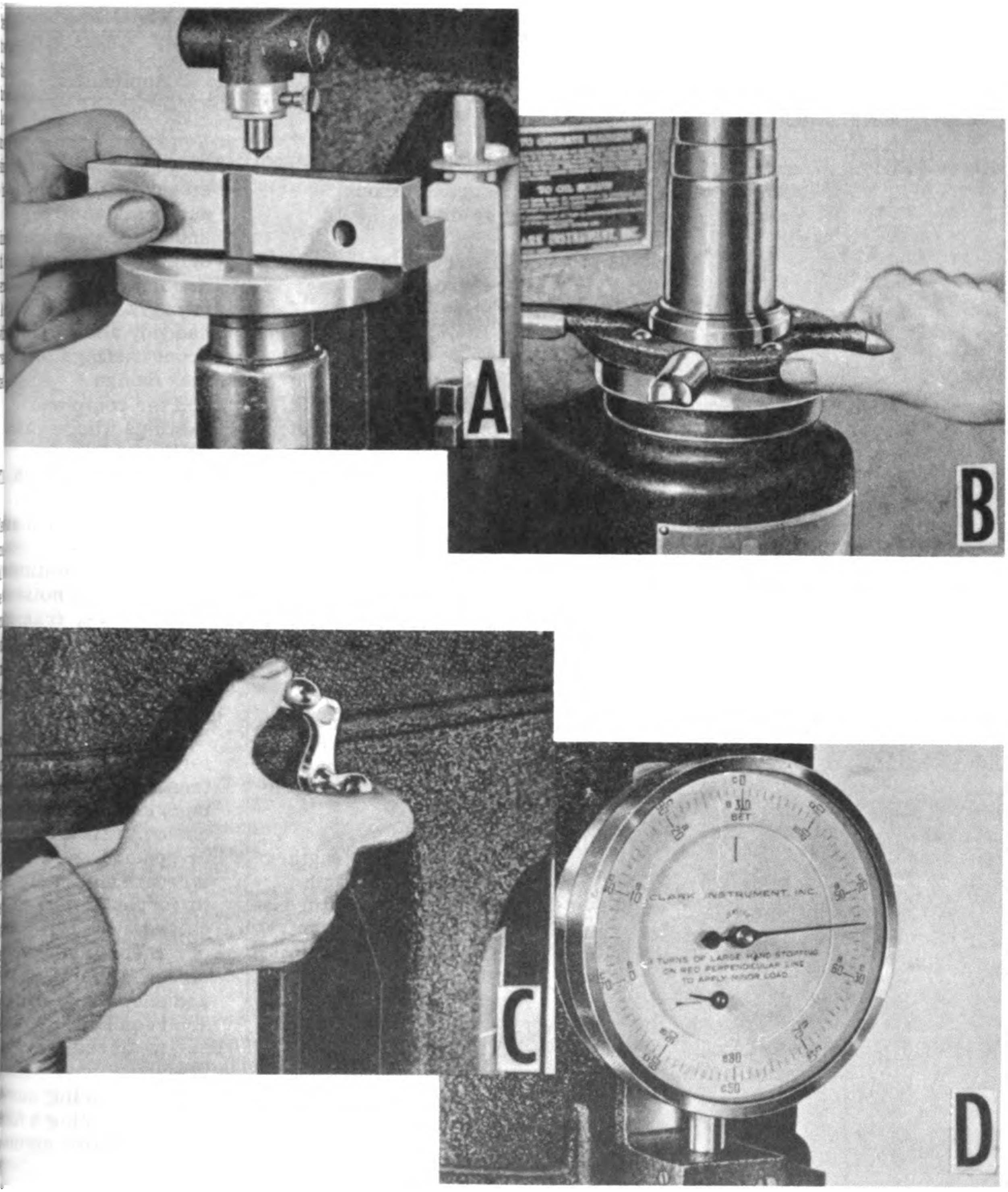

102.90X

Figure 10-11. —Using the Rockwell tester.

Table 10-7.—Nonferrous and Ferrous Materials Used in Navy Foundries.

Specification Number	Material	Class or grade	Characteristics[1]	Application
CAST NONFERROUS ALLOYS				
MIL-A-17129	Aluminum alloy castings (sand)	1	High tensile strength, ductile, shock resistant.	For general use wher strength, ductility, and resistance to shock are required.
		2	High resistance to corrosion.	For general use wher maximum resistanc to corrosion is needed, and for leak proof castings of co plex design.
		3	High tensile strength, corrosion resistant; responds well to heat treatment.	Used for complex castings where castability, pressure tightness, strength, fluidity, and resistance to corrosion ar requirements.
		4	High tensile strength, nominal resistance to corrosion; must be heat treated.	Used for ammunition stowages and hoist finger trays, frame and sills for joiner doors, ladder tread sprocket guards.
		5	Good tensile strength, relatively high corrosion resistance; heat treatment not required.	Used for applications similar to those liste for Class 4, but whe tensile properties c be sacrificed to corrosion resistance.
		7	High tensile strength, retaining strength at high temperatures; corrosion resistant.	For general use wher strength and resista to corrosion are required.
		8	High tensile strength, ductile, shock resistant.	For general use wher strength, ductility, and shock resistanc are required.
QQ-T-390	Antifriction metal castings	1	Medium-hard babbitt metal.	Used in aircraft engi bearings.
		2	Genuine babbitt metal, hard and ductile.	Used for bearing surfaces requiring a har ductile, white metal alloy.
		3		Used in diesel engine bearings when specifically require

Table 10-7.—Nonferrous and Ferrous Materials Used in Navy Foundries—Continued

Specification Number	Material	Class or grade	Characteristics[1]	Application
AST NONFERROUS ALLOYS (Cont.)				
Q-T-390—Cont.	Antifriction metal castings	4	Harder than Grades 1, 2, and 3.	Used in diesel engine bearings where loads are excessive, but impact is not severe.
IL-B-17512	Brass castings	-	High tensile strength, tough, fair resistance to corrosion.	Used for torpedo tubing, and other applications where strength, toughness, and moderate corrosion resistance is required.
IL-B-17668 (46-B-11)	Brass, commercial; castings	1	From 65 to 70 percent copper. (Grade 2 is from 70 to 74 percent copper, but serves the same purposes as Grade 1.)	Used for instrument cases, nameplates, oil cups, handrail fittings, trim; and in general for fittings where strength and corrosion resistance are not necessary, and where cheap brass will serve the purpose.
IL-B-17511 46-B-10)	Brass, naval; castings	-	Relatively low tensile strength, fair resistance to corrosion; a general purpose brass.	Used for belaying pins, door fittings and frames, pipe flanges, rail and ladder stanchions, scuttle frames, tarpaulin hooks.
IL-B-16033 49-B-3)	Bronze, aluminum; castings	1	High tensile strength, tough, good wear and corrosion resistance. (Classes 2, 3, and 4 can be heat treated; have higher tensile strength than Class 1, but are otherwise the same.)	Used for gears, pinions, propeller blades, worm wheels.
IL-B-16522	Bronze, aluminum-manganese; castings	1	High tensile strength, tough, resistant to water corrosion. (Classes 2 and 3 are similar to Class 1; but Class 3 is used where stress corrosion is a factor.)	Used for framing, gears worm wheels.

Table 10-7.—Nonferrous and Ferrous Materials Used in Navy Foundries—Continued

Specification Number	Material	Class or grade	Characteristics[1]	Application
CAST NONFERROUS ALLOYS (Cont.)				
MIL-B-16261	Bronze, bearing; castings	I		Used for bearings for winches and conveyors; suitable for us where operating conditions require a metal that will deform locally, to conform to irregular motion or imperfect fit.
		II	Reasonably good structural bronze.	Used for general bearing surfaces; suitable for applications where the bearings are integral with the supporting or enclosing structure.
		III	Higher tensile strength than Grades I and II.	Used for applications where a hard bearing bronze is required, as in ammunition conveyors and hoists, booms, cranes, davits, winches, turret turning gear, steering gear bearings, rudder bearing rings, sleeves for steering gear link pins.
		IV	Same as Grades I and II.	Same as Grades I and II.
		V	Same as Grade I.	Same as Grade I.
		VI	Relatively high tensile strength, hard, shock resistant.	Used for finely finished, true running, heavily loaded bearings which are lubricated.
		VII		Used for torpedo engine and tail bushings.
MIL-B-16358	Bronze, copper-lead-phosphorus; castings	-	Corrosion resistant, with high degree of machineability. (This is the tinless bronze formerly called X-1 Metals).	Used where good casting and bearing properties, machineability, and good resistance to corrosion are required.
MIL-B-16444	Bronze, hydraulic; castings	A	Can withstand pressures up to 350 psi. (Also known as red brass.)	Used for castings not of a bearing nature.

Table 10-7.—Nonferrous and Ferrous Materials Used in Navy Foundries—Continued

Specification Number	Material	Class or grade	Characteristics[1]	Application
CAST NONFERROUS ALLOYS (Cont.)				
MIL-B-16443	Bronze, manganese; castings	1	Relatively high tensile strength, high degree of resistance to salt water corrosion. (High zinc content.)	Used for engine framing, propeller blades and hubs, worm wheels, deck sockets, crosshead slipper shoes, gypsies and capstans for submarines, periscope supports, and other applications where strength and corrosion resistance are primary requirements.
MIL-B-18343 (46-B-24)	Bronze, castings, ornamental	A	Actually a brass, having from 8 to 11 percent zinc.	Used for threaded pipe, and for electrical and ornamental fittings.
MIL-B-16540	Bronze, phosphor; castings	A	Medium tensile strength, good resistance to salt water corrosion.	Used for bearings, bushings, expansion joints, special pipe fittings, pump pistons and casings, gears. Grade A may be used where good strength and resistance to salt water corrosion are requirements.
		B	Medium tensile strength, good resistance to salt water corrosion.	Grade B is intended for use where stresses are low and structural strength is not a requirement.
		C	Medium tensile strength, good resistance to salt water corrosion.	Grade C requires refining for use as a constituent of any of the stronger alloys.
MIL-B-16542	Bronze castings (for screw pipe fittings)	A		Used for cast composition fittings for screwed pipe in general.
MIL-B-17528	Bronze; tin-nickel; castings	1	Good tensile strength.	Used in applications requiring a tin alloy having a salt water corrosion resistance equivalent to that of hydraulic bronze.

Table 10-7.—Nonferrous and Ferrous Materials Used in Navy Foundries—Continued

Specification Number	Material	Class or grade	Characteristics[1]	Application
CAST NONFERROUS ALLOYS (Cont.)				
MIL-B-17528—Cont'd		2	Lower tensile strength than Alloy No. 1, but higher degree of machineability.	
MIL-B-16541 (46-B-8)	Bronze, valve; castings	A	Medium tensile strength, good resistance to corrosion.	Used for manifolds for stern tubes, propeller shaft sleeves, stuffing boxes, low and medium pressure valves, cocks, hose couplings and fittings, macomb strainers, draft gages. This is a general purpose bronze, and can be used where parts are not highly stressed, but where corrosion resistance is required. It may also be used in place of gun metal (MIL-M-16576) wherever the physical properties permit.
MIL-C-20159	Copper-nickel alloy castings	-	About 70 percent copper, 30 percent nickel.	High grade material suitable for pipe and tube fittings.
MIL-C-17112	Copper-nickel zinc alloy castings (nickel-silver)	-	About 65 percent copper, highly resistant to tarnishing and corrosion.	Used for graduated sight drums on fire control instruments, and for applications where white color, corrosion resistance, and good mechanical properties are required.
QQ-C-593a (46-B-28)	Copper-silicon alloy castings	a	High tensile strength, tough, corrosion resistant.	Used where requirements call for sound homogeneous castings that are strong, tough, workable, and resistant to corrosion.

Table 10-7.—Nonferrous and Ferrous Materials Used in Navy Foundries—Continued

*Specification Number	Material	Class or grade	Characteristics[1]	Application
CAST NONFERROUS ALLOYS (Cont.)				
MIL-M-16576 (46-M-6)	Gun metal; castings Composition G	A	Good tensile strength, fair machineability; resistant to salt water corrosion.	Used for air pump casings, condenser heads, gear wheels, valve boxes, stop valves, safety valves, expansion joints, flanged pipe fittings, and other parts requiring medium strength and resistance to salt water corrosion.
QQ-N-288 QQ-N-00288 (46-M-1)	Nickel-copper alloy castings	-	Medium tensile strength, extra-high resistance to corrosion.	Used for shaft nuts and caps, valve trim and fittings, high pressure valves, and other applications requiring corrosion resistance at high temperatures.
MIL-N-20165 (46-N-7)	Nickel-copper-silicon alloy castings	A	High tensile strength.	Used for propellers.
		B	Composition about the same as Class A.	Used for applications requiring non-galling and antiseizing characteristics.
CAST FERROUS ALLOYS				
QQ-I-652 (46-I-6)	Gray iron castings	A	Low tensile strength, no ductility. (Classes B and C have a higher tensile strength than Class A, but otherwise have the same characteristics, and are used for similar applications.)	Used for cylinder liners, pistons, and piston rings; in general, can be used for machinery parts or wearing surfaces that can be cheaply renewed and therefore do not require materials having weight, strength, rigidity, and resistance to vibration and shock. Should not be used where temperatures exceed 425°F.

Table 10-7.—Nonferrous and Ferrous Materials Used in Navy Foundries—Continued

Specification Number	Material	Class or grade	Characteristics[1]	Application
CAST FERROUS ALLOYS (Cont'd)				
QQ-I-652 (46-I-5)	Gray iron castings, high test	A	Fairly low tensile strength, no ductility. (Classes B, C, and D have higher strength, but are otherwise similar to Class A in characteristics and applications.)	Used for rotors of rotary pumps; steam cylinder liners, pistons, and piston rings of reciprocating pumps; and crankcase and cylinder blocks for internal combustion engines. In general, used for purposes similar to Specification No. 46-I-6, but where greater strength, rigidity, and wear resistance is required; however, use must be specifically approved where strength is an important factor. Should not be used where temperatures exceed 425°F.
MIL-G-858	Gray iron castings, scale-resisting	1	Corrosion resistant. (Class 2 has same characteristics and uses as Class 1.)	Used for galley range tops and other applications where operating conditions involve high temperatures, a tendency to scaling or warpage, and corrosive action of caustic, acid, and salt water.
MIL-S-15083	Steel castings	CW		Used where strength is not a primary requirement, but where welding may be required.
		B	Medium tensile strength, readily machineable.	Used for turbine castings, bedplates for motors, drums for hoists, safety valves, and other applications requiring a general purpose steel resistant to shock or vibration. Should not be used for temperatures in excess of 775°F.

Table 10-7.—Nonferrous and Ferrous Materials Used in Navy Foundries—Continued

Specification Number	Material	Class or grade	Characteristics[1]	Application
CAST FERROUS ALLOYS (Cont.)				
MIL-S-15083—Cont'd		A70	Good tensile strength.	Used for special structural parts; if the castings are to be welded, select the composition that will minimize the use of of hardening elements.
		A80	Good tensile strength.	Used for chainpipes, hawsepipes, pistons, followers for piston valves, and other important parts subject to compressive stresses or surface wear.
		A90	High tensile strength. (Class A100 has an even higher tensile strength than Class A90, but otherwise is similar in characteristics and uses.)	Used for bearings for turret turning pinions, thrust blocks for turret worm gears, carriages for ammunition hoists, and parts where great strength, combined with ductility, is required.
MIL-S-870	Steel, molybdenum alloy castings	-	Good tensile strength; resistance to creep.	Used for steam applications, for temperatures up to 875° F; also used, if approved, for certain high pressure hydraulic services.
MIL-S-15464	Steel, chromium molybdenum alloy castings	1	Good tensile strength.	Used with superheated steam at temperatures of 850°F to 1050°F.
		2	Good tensile strength. (Class 3 has same characteristics and applications as Class 2.)	Used with superheated steam at temperatures of 950° to 1050°F.

Table 10-7.—Nonferrous and Ferrous Materials Used in Navy Foundries—Continued

Specification Number	Material	Class or grade	Characteristics[1]	Application
CAST FERROUS ALLOYS (Cont.)				
MIL-S-867—Cont'd	Steel, corrosion-resisting austenitic	I	Good tensile strength. (Classes II and III have same characteristics and applications as Class I.)	Used for castings that must be exposed to conditions of combined high temperatures and corrosion.
MIL-S-16993	Steel castings, 12 percent chromium	-	High tensile strength, good resistance to oxidation.	Used for ship propellers, pump casings, compressor housings; jet engine parts, and for load-carrying applications at high temperatures; above 1200° F, however, the alloy is not suitable for stressed applications.
MIL-S-17249	Steel castings, Hadfield manganese (low magnetic permeability)	-	High tensile strength.	Used for anchors, aircraft arresting hooks, gypsy heads, and heads, and other nonmagnetic applications.

[1] Information on use represents usual practice. It must not be taken as superseding or modifying the special material requirements of individual machinery items as stated in BuShips specifications.

Table 10-8.—Conforming Specifications for Metals and Alloys for Navy Foundries.

(For metal or alloy consult table 10-7 under Specification Number and Material Columns.)

Military Specification Number	Grade or Class	Similar or Equivalent Specification Number	Melting Temperature (range °F)	Casting or Pouring Temperature (range °F)
MIL-A-1729	1	SAE 310, ATSM B-26-54T, QQ-A-601a Comp. 17	1085-1165	1250-1450
	2	ATSM B-26-54T Alloy S5A, QQ-A-601a Comp. 2	1065-1170	1250-1450
	3	SAE 323, ASTM 4217B, ATSM B-26-54T Alloy SG70A	1035-1135	1250-1450
	4	SAE 38, AMS 4230B, AMS 4231B, QQ-A-601a Comp. 4, ATSM B26-54T Alloy C4A	970-1190	1250-1450
	5	SAE 320, ATSM B26-54T Alloy G4A, QQ-A-601a Comp. 5	1110-1185	1250-1450
	6	QQ-A-601a Comp. 21	1250-1500	1250-1450
	7	SAE 355, ASTM B26-54T Alloy SC51A, QQ-A-601a Comp. 10, AMS 4210E, AMS 4212D, AMS 4214C	1015-1150	1250-1450
	8	SAE 315, ASTM-B26-54T Alloy ZC81A, Mil-A-12033 Comp. 1	1120-1190	1250-1450
QQ-T-390	1	ASTM B-23-49 Alloy 7, SAE 14, QQ-M-161a (1) Grade 7	460-640	617-850
Mil-B-17512	-	ASTM B132-52 Alloy A, ASTM 147-52 Alloy 7A, QQ-B-726c (2) Class D	1650-1700	1800-2150
Mil-B-17668	1	ASTM 146-52 Alloy 6B, SAE 41, QQ-B-621a (1) Comp. B	1700-1725	1850-2100
Mil-B-17511	6	ASTM B146-52 6C, Mil-C 15345A (2) Comp. 7, QQ-B-621a (1) Comp. A	1700-1725	1850-2100
Mil-B-16033	1	ASTM B148-52 Alloy 9A, SAE 68A, QQ-B-671b Class 1	1900-1910	2000-2200
Mil-B-16522	1	ASTM B22-52 Alloy E, ASTM Bk47-52 Alloy 8, QQ-B-726c (2) Class B, AMS 4862B, SAE 430A, SAE 430B	1650-1700	1800-2150
	I	ASTM B66-52, ASTM B67-52, QQ-B-691b (1) Comp. 7, AMS 4840	1700-1750	1900-2250

Table 10-8.—Conforming Specifications for Metals and Alloys for Navy Foundries—Continued

(For metal or alloy consult table 10-7 under Specification Number and Material Columns.)

Military Specification Number	Grade or Class	Similar or Equivalent Specification Number	Melting Temperature (range °F)	Casting or Pouring Temperature (range °F)
Mil-B-16522 Cont'd	II	Mil-B-11553 Comp. 8, Mil-C-15345A (2) Comp. 5, QQ-B-691b (1) Comp. 8	1700-1750	1900-2250
	III	QQ-B-691b (1) Comp. 9	1700-1750	1900-2250
	IV	Same as Grades I & II	1700-1750	1900-2250
	V	Same as Grade I	1700-1750	1900-2250
	VI	ASTM B144-52 Alloy 3B, SAE 660, Mil-C-15345A (2) Comp. 6, QQ-B-691b (1) Comp. 12, Mil-B-11553B Comp. 12	1750-1800	1900-2250
	VII	None	1700-1750	1900-2250
Mil-16358	-	None	1790-1840	1950-2350
Mil-B-16444	A	ASTM B62-52, ASTM B145-52 Alloy 4A, SAE 40, AMS 4885B, Mil-C-15345A (2) Comp. 1, QQ-B-691b (1) Comp. 2, Mil-B-11553B Comp. 2	1810-1840	1950-2350
Mil-B-16443	1	ATSM B147-52 Alloy 8A, SAE 43, AMS 4860, Mil-C-15345A (2) Comp. 8, QQ-B-726c (2) Class A	1690	1750-2000
Mil-B-18343	A	ASTM B145-5A, ASTM B30-5A, Mil-B-16540, QQ-B-691b No. 4, QQ-B-701a No. 4	1750-1800	1950-2300
Mil-B-16540	A	ASTM B-143-52 Alloy 2B, SAE 62, QQ-B-691b (1) Comp. 6 Mil-C-15345A (2) Comp. 4, Mil-B-11553B Comp. 6	1750-1800	1950-2300
	B	Same as A	1750-1800	1950-2300
	C	ATSM N145-52 Alloy 5A, Mil-B-11553 B Comp. 11 QQ-B-691B (1) Comp. 11	1750-1800	1950-2300

Table 10-8.—Conforming Specifications for Metals and Alloys for Navy Foundries—Continued

(For metal or alloy consult table 10-7 under Specification Number and Material Columns.)

Military Specification Number	Grade or Class	Similar or Equivalent Specification Number	Melting Temperature (range °F)	Casting or Pouring Temperature (range °F)
Mil-B-16542	A	QQ-B-691 (1) Comp. 3	1750-1800	1950-2300
Mil-B-17528	1	ATSM B207-a4T Alloy A	1800-1830	1900-2300
	2	None	1800-1830	1900-2300
Mil-B-16541	A	ASTM B61-52, SAE 622, ATSM B143-52 Alloy 2A, QQ-B-691b (1) Comp. 1, Mil-C-15345 (2) Comp. 2, Mil-B-11553B Comp. 1	1800-1830	1900-2300
Mil-C-20159	-	None	2027-2089	2250-2600
Mil-C-17112	-	ASTM B149 Alloy 11A, ASTM B271 Alloy 11A	2027-2089	2250-2600
QQ-C-593a	a	ASTM B198-52 Alloy 12A	1800-1900	1900-2150
Mil-M-16576	A	ASTM B143-52 Alloy 1B, SAE 620, Mil-C-15345A (2) Comp. 3, QQ-B-691b (1) Comp. 5, Mil-B-11553B Comp. 5, QQ-L-225 (No. 5)	1800-1875	1920-2300
QQ-N-288 QQ-N-00288	-	ASTM B198-52	2020-2090 2050-2090	2650-2850 2700-2850
Mil-N-20165	A	Mil-N-4498 Comp. 1	2020-2090	2650-2850
QQ-I-652	A	ATSM A-4848 Class 20, ASTM A126-42 Class A, ASTM A278-53 Class 20	1750-2400	2350-2600
Mil-G-858	1	AMS5392D	1750-2350	2450-2800
Mil-S-15083	CW	None	1750-2450	2850-2950
	B	None	1750-2450	2850-2950
	A70	None	1750-2450	2850-2950
	A80	SAE 080, ASTM A148-50T Grade 80-40	1750-2450	2850-2950
	A90	None	1750-2450	2850-2950

Table 10-8.—Conforming Specifications for Metals and Alloys for Navy Foundries—Continued

(For metal or alloy consult table 10-7 under Specification Number and Material Columns.)

Military Specification Number	Grade or Class	Similar or Equivalent Specification Number	Melting Temperature (range °F)	Casting or Pouring Temperature (range °F)
Mil-A-17129 Mil-S-870	-	None	1750-2450	2850-2950
Mil-S-15464	1	ASTM A217-49T Grade WC6	1750-2450	2850-2950
	2	ASTM A356-52T Grade 10, ASTM A217-49T Grade WC9	1750-2450	2850-2950
Mil-S-867	I	SAE 60304, Mil-S-17509 Class III, ASTM A296-49T, ASTM A351-52T Grade CF-8	1750-2450	2850-2950
Mil-S-16993	-	SAE 60410, AMS 5350, AMS 5351B, ASTM A296-49T, ASTM A351-52T Grade CA-15	1750-2450	2850-2950
Mil-S-17249	-	ASTM A128-33, Mil-C-5698	1750-2450	2850-2950

CHAPTER 11

FACTORS RELATED TO THE CASTING OF METALS

The mechanical procedures for casting ferrous and nonferrous metals are basically the same. There are certain differences, however, such as molding sand mixtures and the relationship of the mold to casting design. Molding techniques may also differ for the various metals and alloys.

As discussed earlier in this training course, the basic design of a casting in regard to shrinkage, the melting procedures, the molding and preparation, the molding procedures, cores and core sand mixtures, all have a direct bearing on the soundness of the casting.

It has been shown that each metal or alloy solidifies in a definite manner, however, the time required to reach a given thickness of skin during the solidification varies among the different metals. The speed of solidification depends on how fast the necessary heat can be removed by the mold. The rate of heat removal depends on the relation between the volume and the surface area of the metal. Changes in design to control solidification sometimes can be made by the designer. If, however, a change in the rate of solidification is required for the production of a sound casting, the Molder may use methods that will result in little or no change in the shape of the casting. The rate of solidification can be influenced by: (1) changing the rate of heat removal from some parts of the mold by chills; (2) gating and risering techniques, mold manipulation, and control of the pouring speed; and (3) padding the section(s) with extra metal that can be machined off later.

This chapter includes a discussion on the differences in the casting of ferrous and nonferrous metals, the types of solidification control, and techniques for casting of various metals and alloys as prescribed by the Bureau of Ships. In addition, this chapter will provide information on the selection of the casting alloy, how to determine the weight of the casting from the weight of the pattern, and how to calculate the weight of the furnace charge (including metal loss) for a particular heat or melt.

DIFFERENCES IN CASTING FERROUS AND NONFERROUS METALS

Although the molding sands used for gray iron castings are basically the same as those used for nonferrous castings, they may have other substances added to the sand which will change the characteristics of the sand mixture. On the average, the sands used for ferrous metals are more permeable than those sands used for nonferrous metals. This is due to the higher moisture content required in the sand for ferrous metals. The molding sand used for cast iron must be more heat resistant than that used for brass and bronze because of the higher pouring or casting temperatures required for cast iron. However, molding sand used for brass and bronze may be used for small cast iron or steel castings if extreme care is exercised during the molding process and the moisture content is closely controlled. (See chapters 6 and 7.)

Gates and risers for ferrous castings and nonferrous castings are similar although the iron casting has a smaller riser and gate. Because iron castings are more usually brittle as compared to nonferrous castings, most risers and gates can be broken off or knocked off of the casting. For this reason, the juncture between the casting and the gates and risers is slightly filleted to prevent breaking into the casting when these parts are broken off. Too large a fillet on the gate or riser will cause the break to leave an excessive amount of metal that has to be ground off. The gates and risers used on nonferrous castings are removed by means of a saw, chisel, or abrasive wheel. The gates and risers are joined to the casting with a generous fillet to take care of the shrinkage. These fillets may be removed from the casting very easily.

Although the casting is fed from the risers as in nonferrous castings, ferrous castings generally have open risers which are kept open by churning. The reason for keeping the riser open by churning is that a better casting can be produced with a smaller riser. Molten metal is added (topped) to the risers of ferrous castings during the solidification stages, thereby keeping the risers full at all times. This procedure is possible because there is usually a ready supply of hot metal either in the ladle or furnace. (See chapter 7).

SOLIDIFICATION CONTROL

Solidification as a factor in the internal structure of metals has been discussed in chapter 10 of this training course. Let us consider here the methods by which solidification can be controlled, and contraction compensated for, in the effort to produce sound castings of accurate dimensions.

The transition from the molten metal to the cool and solid casting takes place in three steps: (1) the metal cools from the pouring temperature to the solidification temperature, (2) the metal cools through the temperature range at which it solidifies, and (3) the solid metal cools to room temperature.

The temperature range in the first step—that is, the difference between pouring temperature and tapping temperature of the metal is known technically as the superheat. The amount of superheat has a practical value to the foundryman, since it indicates the amount of time that is available before the molten metal begins to solidify.

During the second step, the quality of the casting is determined. It is during the time that the metal passes through the solidification range that shrink holes, blowholes, and other defects form.

During the third step—that is, while the metal cools to room temperature—warpage and casting stresses occur.

Within seconds after a metal has been poured, a gradually thickening envelope or skin forms. The rapidity with which solidification occurs depends not only upon the solidification range of the specific metal, but also upon the mass and the surface area of each mold section. Thin sections, and external corner sections with their greater surface area, will solidify first.

At internal corners, where the mold surface is faced on two sides by metal, solidification takes place more slowly. This is caused by the fact that the mold sand absorbs heat more rapidly than it can conduct it away from the metal.

The Molder cannot do much about section thicknesses, corners, and other details of the casting shape, but he can influence the rate of solidification in other ways. He can control the rate of pouring; he can employ chills, to increase the rate of heat removal from certain parts of the casting; he can pad thinner sections with extra metal that can later be machined off; and as he becomes expert in his work, he can influence the rate of solidification by gating, risering, and mold manipulation.

It will help you in the control of solidification if you remember certain basic facts. Transfer of heat away from the metal and to the mold sand is more rapid when the mold cavity is first filled. As the casting cools and solidifies, this heat transfer takes place at a reduced rate. When the sand has reached its maximum capacity to store heat, there can be no further transfer of heat except to the amount that balances the ability of the sand to conduct the heat away. Inasmuch as this ability to conduct heat away is a much slower process than the ability to absorb the heat, the rate of heat transfer is naturally lowered.

Another factor in decreasing the rate of heat transfer is the virtual insulation that is formed when a solidifying casting contracts away from the mold and leaves an air gap.

Contraction takes place as a casting solidifies and continues to cool to room temperature. The contraction that occurs as the metal cools while still remaining in the liquid state is known as liquid contraction; the next step is known as solidification contraction, and the contraction that occurs as the metal mass cools after its solidification is known as solid contraction. These three steps correspond to the three cooling steps mentioned above. Let us briefly consider solid and liquid contraction; and then pass on to the shrinkage that occurs during the second stage in contraction, and that can be the cause of serious casting defects.

Contraction in the SOLID STATE has been the subject of considerable study. The shrink rule has been developed to arrange for making shrinkage allowances on the casting pattern, without the necessity for making difficult computations. Since solid contraction is resisted by the mold, stresses are often set up in castings and have to be subsequently corrected by heat treatment.

LIQUID CONTRACTION is likely to cause much less trouble than solid contraction. It is relatively small in amount, and is usually taken care of by the reservoir of hot metal provided in the risers. It will be well to remember, however, that these risers must be carefully located so that they will feed the area requiring extra metal. An incorrectly placed riser could possibly cause worse shrinkage of a casting than would have occurred had there been no riser at all.

The amount of SHRINKAGE that takes place in a given volume of metal, as it cools from pouring temperature to room temperature, may surprise you. Table 11-1 shows shrinkage percentages for the metals with which you will be most concerned.

Relationship Between Solidification and Casting Design

Design of a casting has much to do with the internal grain structure, and therefore with the strength and soundness, of the final result. While it is true that as a Molder in the petty officer grades you will have very little to say about the pattern of a casting, you should understand the ways in which the pattern may affect the finished casting.

Best design practice calls for the use of the minimum cross-sectional thickness that will produce the required strength. There are, however, other limits on cross-sectional thickness, imposed by the fluidity of the alloy being used. You may think that you can overcome these latter limitations by raising pouring temperature to increase the fluidity of the metal. This practice is more likely to have harmful effects on the casting, because it burns out alloying elements and allows greater absorption of gas by the metal.

Tapering the sections of a pattern so that the points farthest from the risers solidify first helps to assure progressive solidification. The advantage of the tapered design is obvious, since

Table 11-1.— Amount of Shrinkage That Occurs in Metals and Alloys as They Cool From Pouring Temperatures to Room Temperatures.

Alloys (of Specific Compositions)	Composition	Percentage Decrease in Volume	
		Total	During Solidification Range Temperatures
Aluminum	Commercial	12.2	6.5
Brass, red (ounce metal)	85 Cu, 5 Zn, 5 Pb, 5 Sn	10.6	6.3
Brass, yellow (leaded)	70 Cu, 27 Zn, 2 Pb, 1 Sn	12.4	6.4
Bronze, aluminum	90 Cu, 10 Al	11.2	4.1
Bronze, bearing	80 Cu, 10 Sn, 10 Pb	11.2	7.3
Bronze, manganese	56 3/4 Cu, 40 Zn, 1 1/4 Fe, 1/2 Sn, 1 Al, 1/2 Mn	11.5	4.6
Carbon steel	0.25 C, 0.2 Si, 0.6 Mn	11.4	3.8
Cast iron, gray[1]	2.18 C, 1.24 Si, 0.35 Mn	....	4.85
	3.08 C, 1.68 Si, 0.44 Mn	....	1.94
Copper	Deoxidized	10.7	3.8
Monel	67 Ni, 32 Cu	13.9	6.3
Nickel	98 Ni, 1 1/2 Si, 0.1 C	14.2	6.1
Nickel cast iron	13 Ni, 7 Cu, 2 Cr, 3 C	7.8	1.6
Nickel silver	20 Ni, 15 Zn, 65 Cu	12.1	5.5

[1] The gray cast iron of the compositions indicated here decreases in volume during solidification; but gray iron containing 3.69 C, 2.87 Si, and 0.59 Mn expands slightly during the solidification process.

a part having a uniform section cannot be fed for a distance of more than four times the thickness of the section.

A comparison of correct and incorrect design as related to progressive solidification is shown in figure 11-1. In part A, the defect is due to the fact that you cannot feed a thick section through a thin section. The upper section freezes off first, and when the required amount of molten metal cannot be fed to the thick section, shrinkage occurs. In part B, the defect arises from the fact that the area requiring feeding is too remote from the riser.

The incorrect design in part B of figure 11-1, represents not only a failure to provide for progressive solidification, but also the necessity for careful designing at points where sections blend or intersect. Weak spots are almost certain to develop in a casting if the points of intersection in the pattern have not been well designed. Sharp corners can be avoided by using fillets or blending the sections, as indicated in figure 11-2. Three sections should be the maximum number brought together at one junction.

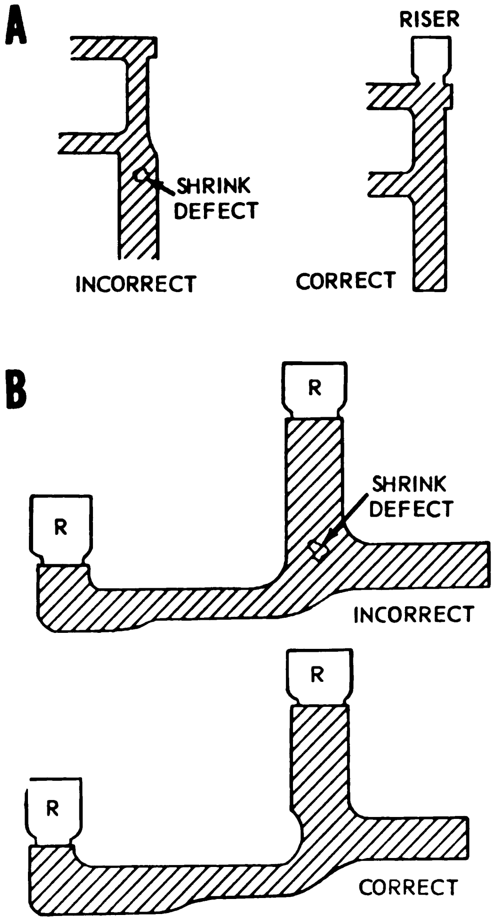

23.7X

Figure 11-1.—Examples of incorrect and correct design.

Bosses and pads increase the thickness of the metal, and create hot spots which can lead to improper solidification and the development of a coarse-grained internal structure. They should be tapered into the casting; if several bosses or lugs are required for a single surface, they should be joined as a panel of uniform thickness. Remember that if it is otherwise impossible to secure a sound casting, bosses may be omitted from the pattern, and added later by welding.

Castings should be designed so that the surfaces to be machined are cast in the drag section of the mold. If a surface that will require machining must be cast in the cope, it is necessary to provide an extra allowance for the finish.

TYPES OF SOLIDIFICATION CONTROL

Controlled solidification is basic to the production of sound castings. This control is normally obtained through a combination of closely related factors, including casting design, mold design, gating and risering, and pouring temperature and pouring speed of the molten metal. Under certain conditions such additional techniques as padding, the use of internal and external chills, and mold manipulation may be necessary to control the casting's solidification.

Although the several factors related to solidification and the production of sound castings are presented as isolated factors, the Molder must remember that the differences between a sound casting and an inferior casting depends upon the extent to which these factors have been related to, and incorporated in, the overall job of producing a casting.

The types of solidification control for the production of a sound casting are gating, risering, internal and external chills, padding, and mold manipulation. Chapter 7 of this training course discusses the gating system, risering system, and internal and external chills. The control techniques such as padding and mold manipulation are discussed in the following paragraphs.

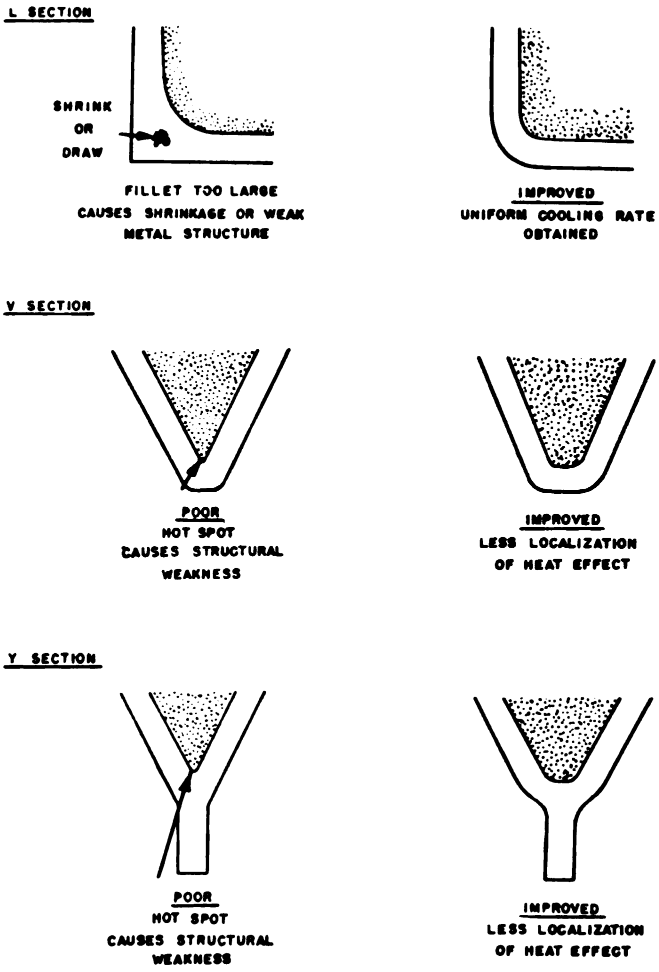

23.6X

Figure 11-2. — Designing adjoining sections to eliminate heat and stress concentration.

Padding

Most instances of heavy and light intersecting members are in the form of flanges, ribs, and webs. Where the use of adequate risers, sectional proportioning, or internal and external chills is not feasible, the problem of controlling solidification may be solved through the use of padding. The technique of using padding is only used when other methods of control will not produce an equally sound casting.

Padding refers to the addition of extra metal in selected places on a casting to provide a tapered section with a gradual change in sectional thickness, rather than the abrupt change required by the design of the pattern. Padding is also used to provide the necessary taper to a properly designed or uniformly shaped section.

Like risers, the only purpose of padding is to help produce a sound casting. When padding is to be employed, the sections should be included in the pattern's design. If weight is important or the mechanical function or the part is affected, the added metal (padding) is removed when the casting is machined.

Padding is used to induce progressive solidification in members or sections of uniform thickness and to prevent the defect known as midwall or centerline shrinkage. This defect is common in wall sections less than 4 inches in thickness, and is a reason for rejection, especially if the casting is to be subjected to high fatigue or impact stresses, or where maximum pressure tightness is required. Padding gives a taper to the section, increasing in thickness in the direction of the riser, causing the section of the casting farthest from the riser to solidify first.

When uniform sections are made without padding, centerline shrinkage occurs due to prevention of feeding by obstructing branches of bridging dendrites during the final stages of solidification. Uniform solidification in a member generally induces centerline shrinkage, whereas progressive solidification along the member prevents its formation. Uniform solidification can be prevented to a large extent by the proper gating and riser ratio, but in some instances this is not sufficient. Figure 11-3 illustrates the typical padding of sections to prevent centerline shrinkage cavities. Figure 11-4 shows some typical cases in which padding is applied to a pattern to avoid the use of risers, or of internal and external chills. Figure 11-5 illustrates typical applications of padding to obtain soundness, or freedom from shrinkage. Figure 11-6 illustrates how a core may be used to make a padded section.

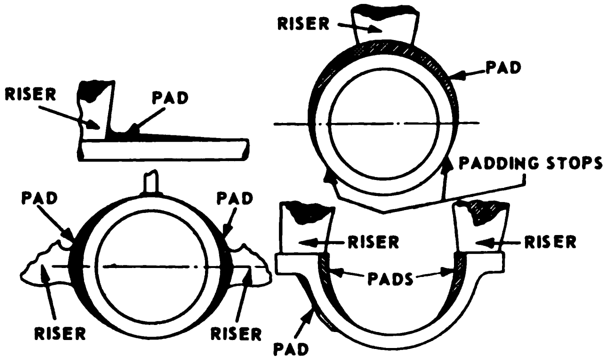

23.17

Figure 11-3.—Typical padding of sections to prevent centerline shrinkage cavities.

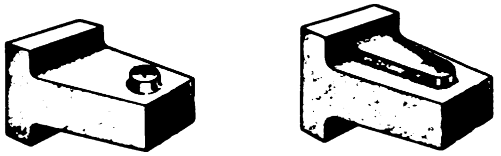

102.91

Figure 11-4.—Typical applications of padding to avoid the use of risers and chills.

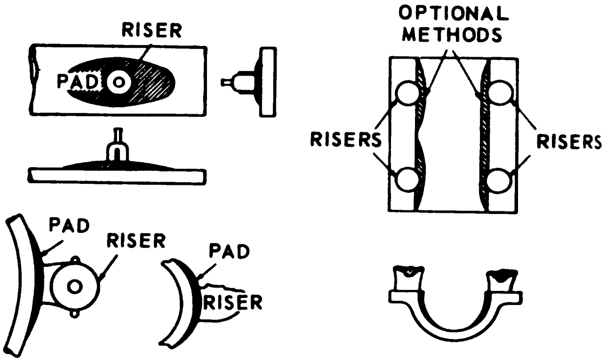

102.92

Figure 11-5.—Typical padding of sections.

Centerline shrinkage actually occurs on the thermal centerline of the casting member since it is the last portion of the casting to solidify. Figure 11-7 shows where centerline shrinkage will occur in unpadded sections. In part A of figure 11-7 the centerline shrinkage of a cored member will be nearer the surface of the core, because of the lower heat extracting capacity of the core due to being completely surrounded by

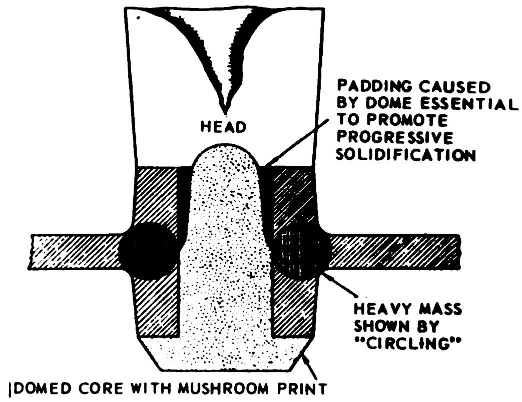

102.93

Figure 11-6.—Use of a core to make a padded section.

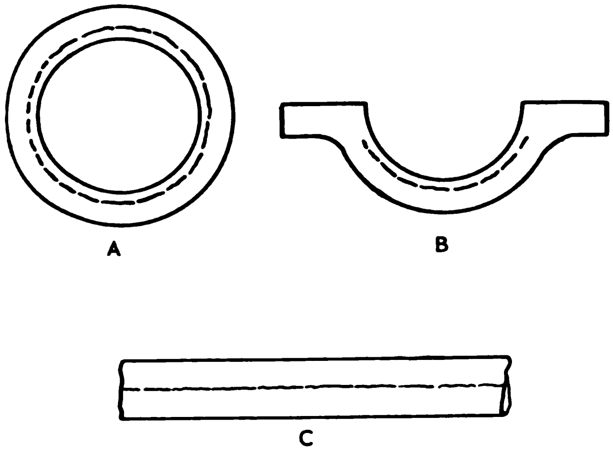

102.94

Figure 11-7. —Shrinkage on the thermal centerline of unpadded casting sections which did not solidify progressively toward the riser.

metal. To a lesser extent, the same principle applies to part B of figure 11-7, while in part C of figure 11-7 the thermal centerline will coincide with the section centerline.

Whereas padding is almost a last resort (to be avoided if at all possible), the use of fillets is a must on all but the simplest designs. Wherever portions of a casting form an angle a fillet is required. Without fillets heat and stress will concentrate at the apex of the angular intersections. This in turn would develop a large grain structure and cause a reduction in strength, if not an actual rupture. The purpose of fillets is to eliminate or minimize heat and stress concentrations by distributing them over a large area.

Mold Manipulation

Mold manipulation is a procedure that makes it possible to keep mold erosion at a minimum. By altering the position of the mold after the pouring operation, even more favorable solidification conditions may be obtained than by top gating. Before pouring is started, the mold is tilted with the in-gate end lowest as shown at A, figure 11-8. After pouring, the mold is turned through an angle of 30°, 100°, or 180°, depending on the design of the part. Manipulations of 100° and 180° are limited to small and medium castings of suitable design. Manipulations of 30°, however, are common for both large and small molds.

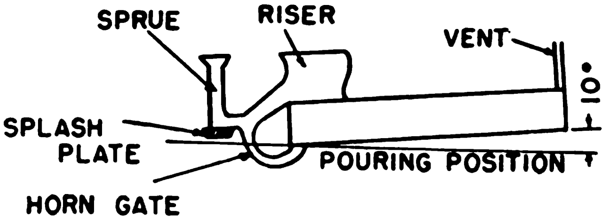

A. BEFORE POURING

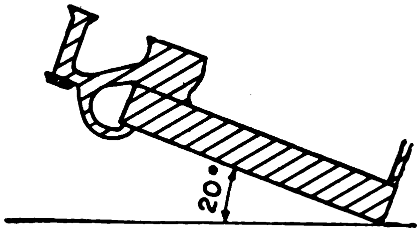

B. AFTER POURING

102.95

Figure 11-8.—The technique of mold manipulation.

The gating system shown in figure 11-8 is devised to ensure the flow of metal through the bottom in-gate until such time as the metal approaches the bottom of the riser. When this occurs, the balance of the mold and the riser are filled through the upper gate. This heats the riser cavity, providing for the proper conditions of "hot metal—hot mold" at the riser, and "cold metal—cold mold" at the farthest point from the riser. (Remember progressive solidification?) A pouring angle of 10° or 15° is found satisfactory for proper bottom gating. This is sufficient to enable the metal to travel forward instead of spreading out over the entire mold cavity. After pouring, the mold is reversed through 30° to 40° to allow for gravity feeding.

The most favorable conditions in both metal and mold may be obtained by the "total reversal" method. This is shown in figure 11-9. In this case, the feedhead is molded on the bottom with only small vents on the top of the mold. The sprue enters the riser at the lowest point to prevent draining after reversal. (See part A of fig. 11-9). After the casting is poured, the vents and the sprue are immediately sealed with wet sand, and the mold is reversed through an angle of 180°, bringing the risers directly above the casting. (See part B of fig. 11-9.)

The use of 100° reversals is not as common as the 30° and 180°, but this method does have

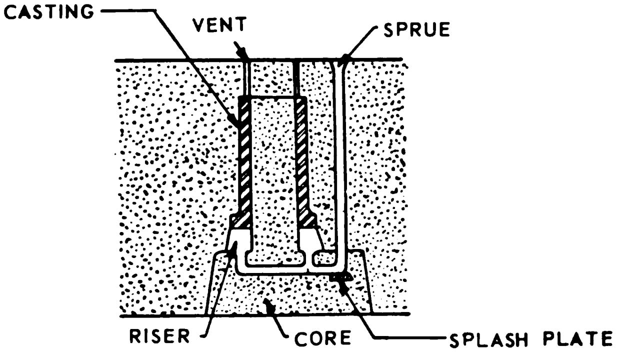

A. BEFORE POURING

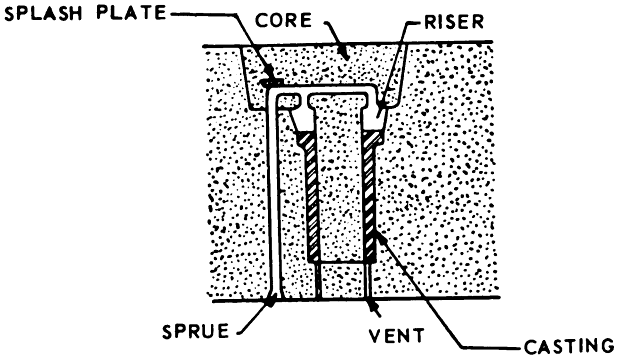

B. AFTER POURING

102.96

Figure 11-9. — Total reversal mold manipulation.

some applications. It involves pouring the mold while it is at an angle of 10° from the horizontal. As soon as pouring is complete, the mold is reversed through an angle of 180°, placing the riser at the highest part of the mold.

CONTROL TECHNIQUES FOR VARIOUS METALS

As stated at the beginning of this chapter, the purpose of this discussion is to acquaint you with the factors related to the casting of metals. As you become more experienced in your work, you will learn how to make variations in the mold design in order to get the best results for the type of casting you are producing. This section should give you some practical help in deciding upon the correct method of solidification control for the various alloys used in shipboard foundries.

Aluminum-Base Alloys

Since aluminum and its alloys form dross if the melt is agitated, avoid turbulence when conducting the molten metal to the mold cavity. You should design your gating system with this in mind. For small castings, use a single gate on one side of the mold; for larger castings, or those of complicated shapes, use multiple gating. When you have multiple gates, however, have your metal hotter for pouring, so as to prevent cold shuts and laps. The quicker the sprue and gates can be filled, the less chance that air will be sucked in to form dross.

Sprues should have a top area three times that of the bottom area. In some cases, you may find that a rectangular sprue will be preferable to a circular one. Two sprue base designs that are capable of reducing turbulence and air suction are illustrated in figures 11-10 and 11-11. Figure 11-10 shows the runner enlarged below the base of the sprue, to reduce the velocity (not volume) of the flowing metal. Figure 11-11 shows a well-type sprue. The cross-section area of the well is five times that of the sprue base, and the well depth is two times that of the runner. This design will prove most effective when used in conjunction with square runners and with wide, shallow runners.

The area of the runner system must be reduced as each gate is passed. Unless you take care to arrange for this, the gates farthest from the sprue will carry most of the metal, and you will not get a uniform distribution of the metal in the mold.

In planning your gating system, the practical approach is to arrange to have each successive runner reduced by an area equal to that of the

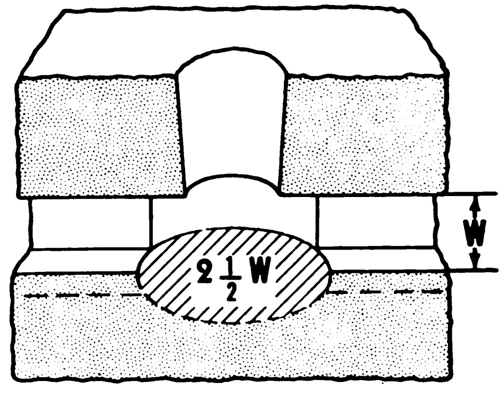

102.97

Figure 11-10. —Enlargement type sprue base.

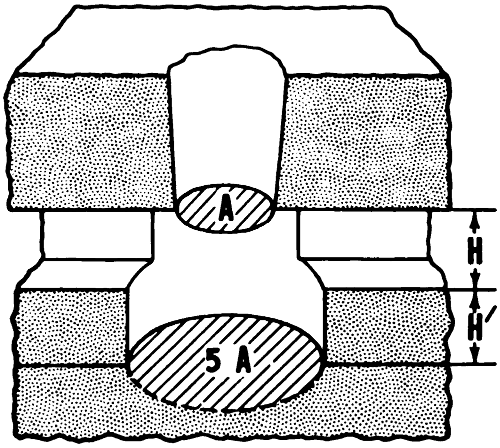

102.98

Figure 11-11.—Well-type sprue base.

revious gate. For example, if the runner AHEAD f the first gate has a cross-sectional area of .5 square inch, and the first gate has a cross-ectional area of 0.125 square inch, then the unner PAST the first gate should be 0.5 minus .125 square inch, or 0.375 square inch. The otal area of the gates should be equal to (or just lightly larger than) the cross sectional area f the runner between the sprue and first gate.

Sometimes this relation between cross-ectional areas is expressed as a gating ratio, omposed of three digits. A ratio expressed as :4:4 tells you that the area of all the gates toether is the same as the total area of the runers, and that total runner (or gate) area is four imes the cross-sectional area of the sprue base.

Size and location of gates depends upon the ize of the casting, and whether it is flat, or ick in sections. Make the gates slightly longer an their width; make the width about three imes gate thickness; and make gate thickness a rifle less than the casting thickness at that oint. Have the spaces between gates about twice e gate width.

You can ensure that the gating system fills ith molten metal before any of it flows into the old cavity if you will put the gates in the cope, nd the runners in the drag. With this design, ross is trapped against the cope surface, and e distribution of metal in the mold is more niform. Wide, flat runners and in-gates give a reater cope surface for the trapping of gas.

Risers should be used with aluminum alloys, ince these metals have a high solidification hrinkage. Wherever possible, gate through the isers; this ensures that the last and hottest metal will be in the riser; and is an added precaution to obtain good directional solidification, and to prevent shrinkage defects.

Proper feeding of aluminum presents something of a problem, because of the tendency for solidification to start throughout the metal. Use external chills of cast iron, bronze, copper, or steel. Make sure that the chills are clean and dry; it is a good idea to warm them before you set them in the mold. Occasionally it may be necessary to coat these chills with plumbago, lampblack, or red oxide; never use organic coatings.

You have already been told to use dry sand molds for castings made of aluminum alloys. Make sure also that the molds are adequately vented. The low density of aluminum reduces the impetus of mold gases and air to escape from the mold cavity.

Copper-Base Alloys

Your biggest problem in making castings from the copper-base alloys will be related to the matter of directional solidification. Composition G metal and M metal, for example, have longer solidification ranges than many of the other metals and alloys used aboard ship. The gating system must be designed with this in mind. Thin castings in nickel silver should have gates of large cross section, to permit rapid filling of the mold. A large-sized runner, with many ingates, makes an effective system.

Risering will also present some problems. For nickel silver and copper nickel alloys, have your risers large enough to provide sufficient metal to feed heavy sections and compensate for shrinkage. Experience and the records of past jobs will be the best basis for determining correct risering procedures.

Heavy billets can be cast in a horizontal position. Tilt the mold so that the riser end is lower during the pouring of the metal; this provides uphill feeding. Use a thin gate to ensure that the metal enters the mold cavity quietly. Then tilt the mold so that the riser end is higher; this provides maximum gravity feeding.

Because of the greater solidification ranges of G metal, M metal, and hydraulic bronze, you will have to provide a stronger chilling action than you would for alloys (manganese bronze, aluminum bronze, yellow brass) with shorter solidification ranges. Figures 11-12 and 11-13 indicate satisfactory ways of placing chills on flat castings, and on bushing castings. You can see that the chills have been tapered, and that

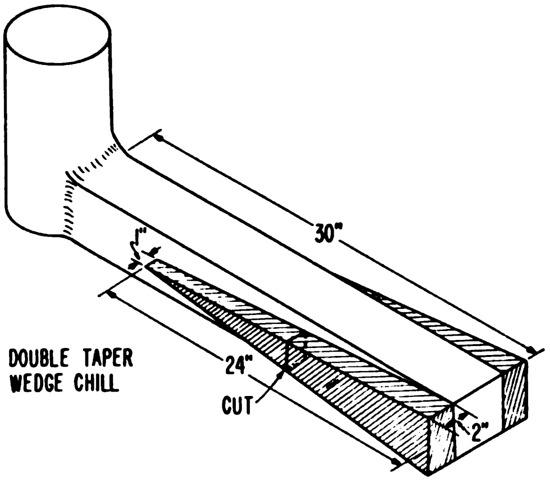

102.99
Figure 11-12.—Tapered chills on a flat G metal casting.

they conform to the size of the castings. Do not let them extend clear to the risers, as they would then extract heat from the risers.

The venting procedures for copper-base alloys are the same as for other metals and alloys.

Nickel-Base Alloys

The nickel-base alloys, such as Monel and modified S-Monel, have wide use because of their excellent strength, and their resistance to corrosion, even at high temperatures. Monel is used for such typical parts as pumps, pump impellers, high pressure valves, bushings, and fittings. Modified S-Monel, which has a high degree of resistance to galling and seizing, and retains its hardness up to 1000° F, is especially useful for parts where there is poor lubrication.

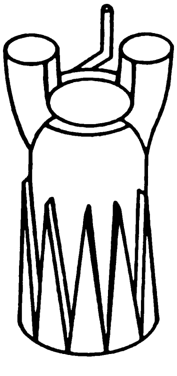

102.100
Figure 11-13.—Tapered chills on a bushing.

The sand used in the mold for castings made of these alloys should have high permeability and low clay content; the all-purpose sand supplied aboard ship will be satisfactory. The gating design should permit rapid filling of the mold cavity, without exposing the mold to radiated heat (from the molten metal) for a period longer than is absolutely necessary.

Large risers are needed to supply the required amount of molten metal, because these nickel-base alloys solidify with a high shrinkage, and within a narrow solidification range. You should use chills to obtain directional solidification. You will find that using chills in heavy sections also ensures soundness.

Be liberal in providing venting for molds and cores. The high temperatures at which these metals are poured make venting especially important. Cores must be vented because the gases generated by organic core binders will affect nickel-base alloys.

Gray Iron Castings

The particular gating system to use for a casting is best determined from experience and the records of past jobs. However, in pouring the mold for an iron casting, you can use gates smaller in cross section than those used for other metals, because of the fluidity of molten iron. Whirl gates will give you better control of the slag and dirt present in an iron melt.

The size of the riser to be used will depend not only upon the thickness of the casting section, but also upon the type of iron being poured. For ordinary cast iron, with a tensile strength of less than 25,000 psi, you will usually not need a riser. The high carbon content of this type of iron can be counted upon to produce graphite flakes sufficient to offset solidification shrinkage.

Even when the carbon content of gray iron is low, small risers will serve. In making very light castings that require no special feeding, use a riser having a diameter of about 2 inches, and make the extension of the riser below the in-gate about 2 1/4 inches. Increase the riser diameter slightly with increased weight of castings. For example, for castings up to 50 pounds, the riser should be 2 1/2 inches; for castings from 50 to 400 pounds, diameters may be from 3 to 4 1/2 inches, and the extension below the in-gate should be from 2 3/4 inches to 3 1/4 inches.

Since the gating and risering system ordinarily provides for directional solidification of gray iron castings, you will seldom need to use chills. There is, indeed, a certain risk in using them, because they are likely to produce a chilled iron, especially in thin sections that solidify rapidly. For castings where no stresses are applied, or upon which no machining needs to be done, or for those that can later be annealed, chilled spots may do no harm. However, since the chills serve no positive purpose, it is better not to use them on gray iron castings.

Venting need be provided only for the high spots on a casting; the molten iron is heavy enough to displace most mold gases (steam excepted) through the permeable mold sand.

Steel Castings

Your major problem with steel castings will be to avoid the mold erosion caused by the jet effect of the molten steel. Arrange the gating system so that there will not be a deep drop of metal into the mold cavity. If the metal must fall far in the sprue, the use of splash cores at the base of the sprue will reduce erosion. It may also be necessary to use a mold wash on runners and in-gates.

Risering practice for steel castings varies. Your best procedure will be to rely upon experience (your own or that of others); there is no simple rule that can be followed in all circumstances.

Chills are used more extensively with steel castings than with other metals and alloys. As a general rule, the sections farthest from the riser will cool too slowly, and external chills will be needed at these far points to speed up the solidification process. Having the riser large enough so that the metal in it will stay fluid while the casting solidifies, and gating through the riser, will help to ensure directional solidification, but you must use chills to make certain of getting the proper degree of solidification.

If the chills have been coated with plumbago or clay, make sure that they are thoroughly dry when you use them. Tapered edges are desirable, since a straight chill may cause a change in solidification characteristics, and the result will be hot tears in the casting.

The high temperatures at which steel is poured generate a great volume of gas in the mold, and make venting a matter of special importance.

SELECTION OF THE CASTING ALLOY

No one metal is satisfactory for every type of shipboard system and service. Special characteristics and properties make specific casting alloys particularly suitable for certain applications. This fact has already been brought out in the table of specifications for ferrous and nonferrous alloys, in chapter 10 of this training course. Additional information on characteristics and applications can be found in the BuShips Foundry Manual, NavShips 250-0334, copies of which are kept aboard repair ships and tenders.

The metal or alloy that is to be used for a specific casting is usually specified by the ship that is requesting the work. Questions arising in connection with the alloy can probably be answered by reference to the blueprints aboard the ship originating the work request.

Occasionally the repair ship force will have to determine the best alloy to use. If the composition of the alloy desired has not been specified, and there are no blueprints available, you may be able to determine the proper alloy from the broken casting, or from another casting of the same type as that required. If the desired composition is not available on the repair ship, you will have to draw upon your knowledge of metal properties, and of operating requirements, to decide what substitute material will be most satisfactory.

When the choice of alloy is left to the foundry shop, a good working rule is to choose the alloy that has the lowest tensile strength of its group. The lower the tensile strength of an alloy, the easier it will be to cast. For example, hydraulic bronze with a tensile strength of 30,000 psi is easier to cast than manganese bronze, which has a tensile strength of 65,000 psi. This rule of choosing the alloy most easily cast cannot be followed, however, if service conditions require that the casting have particular characteristics such as special strength or high resistance to corrosion.

DETERMINING THE WEIGHT OF THE CASTING

An ability to estimate the total amount of metal needed to pour a group of castings is important in the operation of any foundry. There are several methods, depending upon the circumstances involved, that you can use to make this determination. Each method requires a knowledge of shop mathematics. If you are not familiar with the elements of arithmetic, or the procedures used to determine the volume of geometric shapes, you should learn them as soon as possible. Mathematics, Volume I, NavPers 10069-B, will help you gain the knowledge and skill you need.

If the defective part for which a new casting is being made is available, it is a simple matter to determine the amount of metal required. All you need do is weigh the defective part, calculate the weight of the sprues, gates, and risers, and add these weights to that of the casting.

More often than not, though, an old casting is not available. If the part being produced is small, and if its pattern has a solid construction without cores, you can determine the casting's weight by weighing the pattern and multiplying that weight by a constant value. The constant numerical value used depends on the type of metal being cast. These numerical values are listed in table 11-2.

To illustrate this method, suppose that you have a solid, white-pine pattern weighing 3/4 pound, and that the metal from which the casting is to be poured is cast iron. The approximate amount of metal needed for this casting is 12 pounds (0.75 X 16.0). To this amount, of course, must be added the estimated weight of risers, sprues, and gates.

This method must be used with caution. You'll get a wrong answer if the pattern is other than solid. When the pattern is not solid, break the casting's design down into simple component sections—round, square, plates—and calculate the volume of each section in cubic inches. Then, multiply the casting's total volume by the weight per cubic inch of the metal to be poured.

The weights per cubic inch of the common foundry alloys are listed in table 11-3. A typical example of the use of the breakdown method for calculating casting weight is illustrated in figure 11-14.

When calculating the weight of the casting by the numerical value method (weight of the pattern) and when the casting is to be cored, the reduction in weight due to the cored part may be obtained by weighing the dry sand that will fill the core boxes and then multiplying the weight by the proper constant. For cast iron, 4; for brass and bronze, 4.65; and for aluminum, 1.4. Subtract the product of the constant and the dry sand weight from the weight of the solid casting. This will give the approximate weight of the cored casting.

Once you have determined the weight of each individual casting, plus the weight of its sprues, gates, and risers, it is merely a matter of addition to determine the total amount of metal needed to pour all of the molds that have been rammed. However, the total amount of metal required is

Table 11-2.— Numerical Values for Determining Casting By the Pattern Weight

	Casting Material					
Pattern Material	Cast Steel	Cast Iron	Bronze	Copper	Zinc	Aluminum
Pine	17.0	16.0	19.0	19.6	15.0	5.7
Redwood	17.0	16.0	19.0	19.6	15.0	5.7
Mahogany	13.0	12.0	14.0	14.7	11.5	4.5
Cherry	11.5	10.5	12.5	13.0	10.0	3.8
Poplar	15.0	14.0	17.0	17.5	13.0	5.0
Walnut	11.5	10.5	12.5	13.0	10.0	3.8
Cedar	19.0	18.0	21.0	21.5	17.0	6.3
Plaster of Paris	3.2	2.85	3.2	3.44	2.7	1.1
Aluminum	3.2	2.85	3.2	3.44	2.7	1.0

only a part of your furnace charge calculation answer.

Table 11-3.—Weights Of Commonly Cast Alloys.

Material	Weight in pounds per cubic inch
Aluminum	.089
Bismuth	.353
Brass	.310
Bronze	.310
Aluminum Bronze	.295
Manganese Bronze	.308
Cast Iron	.260
Cast Iron, Wrought	.280
Copper	.324
Lead	.409
Monel	.345
Magnesium	.066
Steel	.281
Tin	.263
Low Melting Point Alloy	.350
Zinc	.254
Plaster of Paris	.0894

CALCULATING THE FURNACE CHARGE

The charge of metal ingot and scrap that will be placed in the furnace for melting depends upon a careful estimation of the weight of each element in the alloy being used, the composition and preparation of scrap metal to be used, and the necessary addition of elements to compensate for melting loss. It will also be necessary to allow for the weight of metal needed for risers, gates, and sprues; otherwise the casting will be poured "short."

Actual calculation of the charge requires four major steps, as follows:

1. Multiply the weight of the metal that should be in the finished casting by the required percent of each element; the result is the necessary weight of that element to produce metal of the proper analysis.
2. When you have calculated the weight of each element required in the metal, multiply each such weight by the percent of loss for the specific element; the resulting figures are the weight loss of each separate element.
3. To the weight loss of each element, add the desired weight of that element in the finished casting; the result is total weight of that element which must be put into the charge as master alloy and scrap metal.
4. Total weight of the element which must be added, minus the weight of the element present in the scrap, gives the weight of the element which must be added as new metal or master alloy.

Before we discuss some of the factors mentioned in these rules—total weight of the casting, composition of scrap metal, and weight loss during melting especially—let us look at the type of record that is kept aboard ship for calculating the charge in each heat that is made.

Table 11-4 illustrates the type of record that might be kept for a nonferrous melt. The charge here is calculated for ounce metal; that is, an alloy having approximately 1 ounce each of tin, zinc, and lead for each pound of copper. The desired composition of the casting is given on line 1, in the second column, and is repeated (in the decimal form in which it is used in the calculations) on line 2, under the column headings "percent." The calculations described in Step 1, above, have been made and the results entered on line 2, under the column headings "lb."

Notice that the proportion of scrap used is 2/5 of the total weight. You can see from this how important it is that you know the composition of the scrap that you use in a melt. Notice also the provision made for compensating for melting loss; at the bottom of the form are shown the amounts of virgin metal that must be added to ensure that the casting metal will be of the required composition.

The calculation of a charge for cast iron or steel follows the same procedures as that for a nonferrous heat. Table 11-5 shows the form used for calculating the charge for a cast iron casting. Notice that the figures listed under the headings "percent" for the various elements are relatively small. Since the properties of cast iron and steel can be affected by such very small changes in the various elements, you need to have an exact knowledge of the analyses of the materials you use in making up the charge, in order to produce a metal of the desired composition.

When these calculation forms have been carefully made out and kept aboard a repair ship, they can be of much practical assistance in helping the Molder with his work. Form the habit of

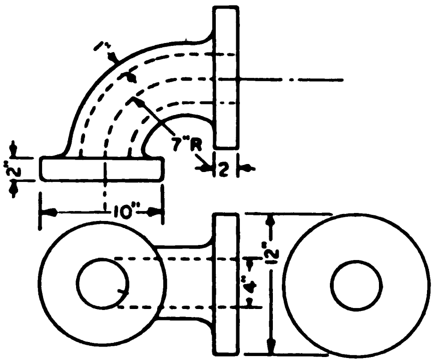

BREAK CASTING DOWN INTO THE COMPONENTS. FLANGE
FLANGE
BODY OF FITTING

FLANGE

(1) DETERMINE AREA OF OD $\frac{12^2\pi}{4} = \underline{113.097}$

(2) DETERMINE AREA OF ID = $\frac{4^2\pi}{4} = \underline{12.57}$

(3) AREA OF FLANGE = (1) − (2) = $\underline{100.5}$

(4) VOLUME OF FLANGE = (3) X 2" = 100.6 X 2 = $\underline{201.1}$

FLANGE

(5) DETERMINE AREA OF OD = $\frac{10^2\pi}{4} = \underline{78.54}$

(6) DETERMINE AREA OF ID = $\frac{4^2\pi}{4} = \underline{12.57}$

(7) AREA OF FLANGE = (5) − (6) = $\underline{65.84}$

(8) VOLUME OF FLANGE = (7) X 2" = 66 X 2 = $\underline{131.95}$

BODY

(9) DETERMINE AREA OF OD = $\frac{6^2\pi}{4} = \underline{28.3}$

(10) DETERMINE AREA OF ID = $\frac{4^2\pi}{4} = \underline{12.57}$

(11) DETERMINE AREA OF CROSS SECTION (9) − (10) = 15.73

(12) SINCE CROSS SECTION IS UNIFORM THE CENTER OF GRAVITY OF THE ENTIRE AREA IS ON THE CENTERLINE. THEREFORE THE VOLUME OF THE BODY CAN BE DETERMINED BY MULTIPLYING THE AREA OF THE CROSS SECTION (11) BY THE LENGTH ALONG THE LENGTH OF THE CIRCLE OF THE CENTER OF GRAVITY.

(13) RADIUS OF CENTERLINE OR CENTER OF GRAVITY OF BODY = $\underline{7"}$

(14) LENGTH ALONG CENTERLINE $\frac{2\pi r}{4} = 2 \times \frac{7 \times 31416}{4} = \underline{11.0}$

(15) VOLUME OF BODY = (11) X (14) = 15.8 X 11.0 = $\underline{172.7}$

(16) TOTAL VOLUME = $\underline{505.77}$

(17) STEEL WEIGHT = .281 X (16) = .281 X 505.77 = $\underline{142.12}$

(18) FILLETS AND FOUNDRY VARIATIONS 3% = $\underline{4.26}$

(19) TOTAL WEIGHT = $\underline{14638}$ LBS.

I.D.—Inside Diameter O.D.—Outside Diameter

102.101

Figure 11-14.—Calculating the weight of a casting by the volume method.

keeping such records yourself, to assist other Molders in making future charges.

WEIGHT PER ELEMENT is an important factor in most castings, since very few of them are made from pure metal. Copper-base alloy castings will make up the major part of your work in the foundry; and you will also work with nickel-base and aluminum alloys. You must determine, therefore, how much of each element is required. This is the calculation that is worked out on line 2 of table 11-5, but let us look at another example in which the weights and percentages are somewhat different from those in the calculation form shown here.

Suppose, then that 250 pounds of metal are needed to pour a certain number of castings. This metal must have a composition of 86 percent

Table 11-4.— Calculating the Charge for a Copper-base Alloy.

leat No.__________ Alloy Copper-base Date

lominal Composition 85-5-5-5

'otal Charge Weight 500 lb

.INE	COMPOSITION 85.0 Cu, 5.0 Sn, 5.0 Zn, 5.0 Pb	WEIGHT	Element							
			Sn		Zn		Pb		Cu	
1		(lb)	percent[1]	lb	percent[1]	lb	percent[1]	lb	percent[1]	lb
2	Desired analysis	500	0.05	25.0	0.05	25.0	0.05	25.0	0.85	425.0
	CHARGE									
3	Scrap	200	0.045	9.0	0.04	8.0	0.05	10.0	0.865	173.0
4	Ingot	300	0.051	15.3	0.049	14.7	0.05	15.0	0.85	255.0
5										
6	Subtotal			24.3		22.7		25.0		428.0
	ADDITIONS									
7	Virgin Lead ..	0.25	....	....	....	....	....	0.25	....	....
8	Virgin Zinc ..	2.80	....	....	....	2.8	....	....	....	....
9	Virgin Tin ...	0.70	....	0.70	....	....	....	....	....	....
10	Total.......	503.75		25.00		25.5		25.25		428.0

[1] The figures in this column are the percentages, expressed in decimal form, that are to be used.

Table 11-5.— Calculating the Charge for Cast Iron.

Heat No.__________ Alloy Cast Iron Date

Nominal Composition 3.15-3.25C, 1.30-1.90Si

Total Charge Weight 100 lb

LINE	COMPOSITION 3.20 C, 0.84 Mn 1.75 Si, 1.00 Ni, less than 0.20 P, less than 0.12 S	WEIGHT	Element									
			C		Si		Mn		Ni		P	
1		(lb)	percent[1]	lb	percent[1]	lb	percent[1]	lb	percent[1]	lb	percent[1]	lb
2	Desired Analysis ..	100	0.032	3.20	0.0175	1.75	0.0084	0.84	0.01	1.00	0.002	0.2
	CHARGE											
3	Steel Scrap	15	0.002	0.030	0.0004	0.006	0.004	0.060	....	....	0.002	0.03
4	Low Phosphorus Pig.	30	0.0426	1.278	0.0140	0.420	0.0078	0.234	....	....	0.00026	0.008
5	Remelt No. 2.....	55	0.031	1.705	0.016	0.880	0.008	0.440	....	....	0.001	0.055
6	Subtotal			3.013		1.306		0.734				0.093
	ADDITIONS											
7	Fe Mn (80%)	0.25	....	....	....	....	0.80	0.20	....	....	....	....
8	Fe Si (50%)	1.00	....	....	0.50	0.50	....	....	....	....	....	....
9	Fe Ni (94%)	1.20	....	....	....	....	....	....	0.94	1.13	....	....
10	Graphite (80%)...	0.30	0.80	0.240	....	....	....	....	....	....	....	....
11	Total	102.75		3.253		1.806		0.934		1.13		

[1] The figures in this column are the percentages, expressed in decimal form, that are to be used.

copper, 8 percent tin, 4 percent zinc, and 2 percent lead. To determine the weight of each element in the charge, you would make the following computations:

250 X 0.86 = 215.0 lb. of copper

250 X 0.08 = 20.0 lb. of tin

250 X 0.04 = 10.0 lb. of zinc

250 X 0.02 = 5.0 lb. of lead

MELTING LOSS will reduce these basic weights, and accordingly some additions must be made to compensate for the loss. You calculate the amount to be added by multiplying the basic weight of each element by the percent of loss for that element. In the Navy shipyards, a chemical analysis is made of every heat. This precaution is not possible aboard a repair ship, but if the foundry maintains good melting records, the data contained therein should help you in estimating melting losses.

All metals are likely to suffer some melting loss, although for some of the elements this loss will be negligible. With some elements, loss will depend upon the alloy in which they are incorporated. The kind of charge, the melting unit used, the length of time the charge is held at superheat temperature, and the tapping temperature, are all factors that help to make variations in the actual amount of loss.

The following list of average melting losses occurring when the indirect arc furnace is used as the melting unit will probably prove helpful, if used only as a guide:

Manganese	10 percent
Silicon	3 percent
Chromium.	nil *
Molybdenum	nil *
Nickel	nil *
Phosphorus	nil *
Sulfur.	nil *

(* On an average, the loss will be about 0.0025, or 1/4 of 1 percent.)

Information concerning the melting losse in a specific melting unit should be available i the shipboard foundry, and a fuller discussio of melting losses is also available in the BuShip Foundry Manual. For the purposes of this training course, it is enough to emphasize the necessity for allowing for melting loss when you calculate the charge, and to stress the fact that th amount of loss depends upon a number of variabl factors.

Proportion of scrap in a charge varie according to the service expected of the finishe casting. The composition of the scrap, howeve is an important factor, regardless of whether th proportion is large or small. The scrap woul be analyzed, if possible, to determine the weight of the various elements that are present in it. I analysis is not feasible, a good estimate mu be made of the composition of the scrap.

The traditional means of identifying metal i by appearance; this is especially true of the nonferrous alloys. However, even when the meta has been thoroughly cleaned, it is not alway possible to distinguish between metals or alloy by color and feel.

Mechanical tests that are simple yet practical can be employed, since variations i strength, ductility, and hardness within a know group of alloys indicate definite differences i composition. Grinding and spark testing, especially of the ferroalloys, and fracturing of th metal, will provide a reasonably accurate identification.

Chemical tests are conclusive, and can b made in a surprisingly brief period of time—fro 2 to 5 minutes for a single test. If the tests ca be made in groups, the time per test can b shortened to 1 minute. These tests are base chiefly upon color reactions, and require ski but only a limited amount of equipment. These chemical tests are routinely made at Navy shipyards, but are not always possible aboard repai ships and tenders.

Various methods of identifying metals an alloys have already been discussed at som length in chapter 10 of this training course. I would be advisable for you, at this point, t review that chapter. However, there is on simple method by which you may save yoursel a great deal of work in identifying scrap meta and that is to form the habit of stowing scrap i separate bins, according to weight, color, and previous use. Before this sorting, the scrap must be sandblasted to remove oxides, paint, or dirt.

When scrap is carefully sorted into separate bins, it is possible to take the scrap for new bushings from the bin containing old bushings, scrap for new valve bodies from the bin containing old valve bodies, and so on. Gates, risers, and excess metal from former castings are usually of known composition; copper that was used for electrical purposes is usually as pure as ingot copper.

This careful segregation of scrap can save a lot of waste on the production end, as you will see when you come to the section on Casting Defects (see chapter 12). It is very difficult to distinguish between gun metal, valve bronze, and leaded bronzes by any means other than chemical analysis; but lead contamination from the wrong type of scrap can cause a lowering of the mechanical properties of a casting. Pressure tightness and other mechanical properties of a casting will be sacrificed if aluminum bronze is added to a charge consisting of gun metal, valve bronze, or hydraulic bronze, or if silicon bronze or manganese bronze is added to a leaded bronze. Adding aluminum in any form to tin bronze will be harmful to the quality of the casting.

GENERAL PURPOSE CHARGE

In the interests of close control of the composition of a metal, the Molder may be called upon to prepare remelt materials from basic raw materials. These remelts, accurately marked and stowed in a properly labeled bin, are available for use in the subsequent production of ferroalloy castings. Remelt No. 1, used in small, light, shell-like castings, contains 20 percent structural steel scrap and 80 percent low-phosphorus pig iron. Spout additions of 0.25 percent ferromanganese and 2.0 percent ferrosilicon must be made.

When a remelt is used in general-purpose iron castings, a typical charge would be as follows:

Metal or element	Percent of total charge
Pig iron, Grade A	15
Low-phosphorus pig	40
Remelt	30
Steel scrap	15
Ferromanganese	0.25
Ferrosilicon	0.25

The ferromanganese and ferrosilicon are made as spout additions. The average chemical composition of such a charge is: carbon, 3.30 to 3.35 percent, manganese, 0.80 percent, silicon, 2.0 percent, phosphorus, less than 0.20percent, and sulfur, less than 0.12 percent.

This typical charge for general-purpose iron may be modified to meet the service requirements of the casting. If section thicknesses are less than 1/2 inch, and the sections require machining, silicon content should be increased from about 2.0 to a range of 2.25 to 2.50 percent. If there is considerable variation in thickness of sections, add 0.30 percent ferronickel and 0.50 percent ferromolybdenum, to ensure a uniform grain structure.

An increase in the hardness of a general-purpose iron casting can be obtained by the addition of nickel or chromium, or nickel and molybdenum, to the charge. Additions to the charge may be 1.25 percent nickel and 0.25 percent chromium, or 0.50 percent nickel and 0.30 percent molybdenum. The addition of 0.40 percent molybdenum may by itself produce the required hardness.

MEDIUM TENSILE CHARGE

Remelt No. 2 is used in charges intended for the production of medium tensile and high tensile iron castings. The formula for this remelt requires 30 percent of structural steel scrap, 70 percent of low-phosphorus pig iron, 0.25 percent ferromanganese (spout addition), and 1.25 percent ferrosilicon (spout addition).

A typical medium tensile charge is as follows:

Metal or element	Percent of total charge
Pig iron, Grade A	15
Low-phosphorus pig	35
Remelt	35
Steel scrap	15
Ferromanganese (spout addition)	0.25
Ferrosilicon (spout addition)	1.25

The average chemical composition of this charge is: carbon, 3.10 percent, manganese, 0.80 percent, silicon, 1.60 percent, phosphorus, less than 0.20 percent, and sulfur, less than 0.12 percent.

This medium tensile iron is suitable for applications where section thicknesses are between 3/4 inch and 1 1/2 inches. It will give satisfactory service in applications where section thicknesses are as high as 4 inches, but where strength and hardness are not critical.

High tensile iron contains a greater proportion of steel scrap and remelt than is used in the medium tensile charge; it also contains small amounts of ferronickel, ferrochromium, and ferromolybdenum. It is used only in special applications, where high physical properties are a requirement.

A word of caution is necessary in regard to ferroalloys. They are manufactured in various grades, with varying alloy content. For example, ferrosilicon may have 15, 50, 65, 75, 85, or 90 percent silicon. Unless the ferroalloy in your shop has the alloy percent indicated, you will not be able to calculate the charge accurately. If this is the situation, you will need the help of an experienced Molder.

CHAPTER 12

MELTING AND CASTING TECHNIQUES

This chapter provides information on the melting of metals, control of gas in the molten metal, tapping and pouring procedures, shaking and cleaning of the solidified casting, and the causes and prevention of casting defects. In addition, a section has been included on the rebabbitting of bearing shells.

MELTING OF METALS

The manner in which you place a charge in the melting unit depends pretty much on the charge itself and the type of furnace available. As a general rule, large pieces and foundry returns (gates, risers, and sprues) should be charged first. These materials must be as free from sand as possible. Sand causes a slag blanket to form on the surface of the molten metal. The formation of a slag blanket is particularly harmful when the melting unit is an electric-arc or resistor furnace. Slag insulates the metal from the heat generated by the electrodes, and makes it difficult to raise the heat to the tapping temperature.

After charging the foundry returns, borings from the machine shop (if used) are placed in the furnace. On top of the borings are placed the ingots or pigs of the higher melting point elements, including such additions as nickel, chromium, molybdenum, and vanadium. In steel and cast iron heats, the final material included in the cold charge is steel scrap.

Elements such as ferromanganese and ferrosilicon in ferrous heats, and zinc and tin in nonferrous heats, are not added until the charge is molten. These additions are usually made from 3 to 5 minutes prior to tapping the heat.

You probably remember from chapter 5 that the proper charging procedure is a matter of experience. You should also recall that care must be exercised in charging the heat to avoid damaging the electrodes of electric-arc and resistor furnaces, and the crucibles of oil-fired and induction furnaces. The technical manual furnished with each melting unit contains specific instructions for charging. If you must charge a furnace without the benefit of experience, or without the benefit of advice from experienced personnel, refer to the publication pertaining to your specific furnace before attempting to charge and run the heat.

One of the most important points to bear in mind when charging is to make sure that all materials making up the charge are thoroughly dry and free from oil, grease, or other foreign matter. This precaution is necessary to avoid defective castings due to the inclusion of gases in the casting.

GASES IN MOLTEN METAL

Gases may be present in castings in three states: in the free state in cavities; in solution in the metal; or in chemical combination with the metal— for instance, rust (Fe_2O_3). There are many possible origins for gases in cast metal: cavities within the ingot or scrap before melting; oxides in the ingot or scrap, or organic compounds, such as oil or paint, on its surface; moisture on the metal, furnace lining, spout, or ladle; humidity in the atmosphere. The very fluxes which are added to the melt to prevent gas pickup may themselves be moist. Finally, in an oil-burning furnace, the process of combustion releases moisture.

It is obvious that all castings will contain undesirable gases unless melted, poured, and solidified under extremely close foundry control. The chance that gas will cause casting defects depends on its state (free, dissolved, or combined), the kind of gas present, and the amount. Gas remaining in solution in the solid state will cause no harm.

The gas which gives greatest difficulty in bronze, brass, and aluminum alloys is hydrogen.

None of the ordinary metals combine chemically with hydrogen, but when molten they dissolve it very easily. The higher their temperature above the melting point, the more hydrogen they will dissolve. Conversely, as the metal containing hydrogen cools, it will expel the gas. Finally, when solidification occurs, all hydrogen above the limit of solid solubility will be expelled. This escape of hydrogen at the instant of solidification causes gas holes in the casting. Also, by stopping liquid feed metal from flowing between the dendrites and grains, the escaping gas may be the direct cause of casting shrinkage. Risers, no matter how well placed, are powerless to prevent shrinkage from this cause.

The simplest method of avoiding gas holes and gas porosity in castings is to keep the solution of hydrogen below the limit of solid solubility. Several means are available. The first is to heat the ingot and scrap slowly to evaporate all water and burn all oil and paint BEFORE ANY MELTING OCCURS. The chief source of hydrogen is, of course, water vapor. (Even burning off oil and paint releases water as a product of chemical reaction.) When water comes into contact with molten metal, it decomposes to form nascent (atomic) hydrogen and oxygen. Hydrogen dissolves easily; oxygen combines with the metal to form oxides.

The ideal, of course, would be to eliminate all moisture. In practice, however, while you can keep moisture low by making sure all metal, flux, and furnace parts are perfectly dry, some moisture will still remain in the atmosphere. Therefore, you need other methods to help keep the amount of solution of hydrogen down. For this purpose you can (1) pour the metal as soon as possible after melting, giving less time for gas to dissolve; (2) heat the metal no hotter than necessary, since the hotter the metal the more gas is in solution; and (3) keep the atmosphere in the oil-burning furnace slightly oxidizing, rather than neutral or reducing. It is true that the excess of oxygen in an oxidizing atmosphere will cause a build-up of oxides in the metal. But the oxides help clear the molten metal of hydrogen; and they can, in any case, be completely removed before the metal is poured, by the use of fluxes.

Removal of oxides before pouring is very important, since oxides reduce the solid solubility of hydrogen. Proper fluxing is therefore a vital art for you to learn. The operation must be carefully and correctly performed if any benefits are to be realized. When you use solid fluxes, make sure they are absolutely dry and apply them in such a way that they will act upon the maximum amount of molten metal. Gaseous fluxes are generally piped to the bottom of the melting pot and allowed to bubble gently through the metal. Like all fluxes, they must be free of water vapor and hydrogen.

Bronzes should be fluxed with phosphor-copper—at least 2 ounces of 15 percent phosphor-copper per 100 pounds of melt; if deoxidation has been complete, the metal will pour without the stream scumming over at any point. Brasses should be fluxed with zinc. Aluminum may not require fluxing; if it does, complete dryness is absolutely essential—the flux may otherwise do more harm than good. Fluxes frequently used for aluminum include zinc chloride, aluminum chloride, cryolite, and gaseous nitrogen or chlorine.

Common practice in melting aluminum alloys is to heat the metal to a temperature of 1300°F to 1400°F before adding flux. The required amount of flux can be determined by sprinkling a small quantity on the molten metal, stirring it into the dross, and continuing to stir in other small amounts until the dross becomes powdery or granular. This dry, granular dross can easily be removed.

In the melting of steel, adding iron ore to the charge causes some of the carbon in the charge to form carbon monoxide. The carbon monoxide forms bubbles in the molten steel and provides a stirring action which carries off the hydrogen which has migrated into the carbon monoxide bubbles. Boiling should be maintained throughout the heat, up to the time the "finals" (i.e. ferromanganese and ferrosilicon) are added. Once they have been added, power should be shut off as soon as possible to avoid unnecessary absorption of gas.

Oxides formed in steel are readily reduced by manganese, silicon, and aluminum. Aluminum is used as a final deoxidizer. Extreme care must be taken in adding aluminum or it will not be effective. It is a very powerful deoxidizer and should always be used when pouring steel into green sand molds, particularly when the steel is made in the rocking-arc or induction furnace. Aluminum should be added in such a way that it enters the steel and does not burn on the surface, or react with the slag. Aluminum is available at advanced bases and aboard repair ships in the form of ingots, normally used in the production of aluminum castings. Since it is necessary to conserve on the number of materials and their forms, aluminum for steel deoxidizing should be prepared by melting the ingot and casting it into small molds.

In summary, then, you should take the followng steps to keep down gases in your castings:

1. Make sure metal, furnace parts, and ladle are perfectly dry and clean.
2. If you must use wet or dirty metal, hold the furnace at a temperature that will evaporate the moisture and burn off the organic material before proceeding to melting temperature.
3. Heat the metal no hotter than necessary.
4. Pour the metal as soon as possible.
5. Maintain a slightly oxidizing furnace atmosphere.
6. Use fluxes, and use them properly.

MELTING PRECAUTIONS FOR VARIOUS METALS

Through the application of design principles nd sand control techniques, the foundryman can void or eliminate many kinds of casting defects. n the production of a dimensionally accurate and metallurgically sound casting, the procedure sed to melt down the furnace charge (heat) is ust as important as properly conditioned sand uitably molded around a pattern designed to acilitate directional solidification. However, ertain precautions should be taken during the melting stages of the metal or alloy to ensure hat a casting will be as sound as possible. In iscussing the precautions that should be taken uring the melting and pouring stages, considration should be given in terms of the particuar type of metal or alloy.

Copper-Base Alloys

Copper-base alloy castings make up a major part of the foundry work done aboard repair hips, so you should learn and carefully observe he following rules:

1. Make sure that your crucibles are clean nd uncontaminated, and use clean, uncontamiated material in the charge.
2. Melt under slightly oxidizing conditions.
3. Melt rapidly.
4. Heat only as necessary; avoid the use of xcessive overheat.
5. Do not hold the metal too long at high emperatures.
6. Use a properly calibrated and maintained yrometer.
7. Skim the molten metal carefully, and avoid agitation; never agitate nor stir the metal immediately before pouring.
8. Allow the metal to cool to pouring temperature in the open air; do not reduce temperature by adding cold metal.
9. Pour the casting as soon as possible.
10. Use deoxidizers only in recommended amounts.

When you are working with copper-base alloy castings, take precautions to ensure that you use the composition specified; deviations from the proper composition can result in detrimental changes in physical properties. Manganese bronze is rendered hard and brittle by zinc in excess of the specific requirements; tin bronze and red brass are made hard and brittle by an iron content of 0.25 percent; an excess of iron in manganese bronze reduces the corrosion resistance of the metal; too much sulfur in red brass or tin bronze will decrease fluidity and produce excessive dross; aluminum or silicon in combination with lead weakens tin bronze.

Pouring temperatures that are too high (about 200° F above proper pouring temperatures) may produce cracks in a casting; and these cracks will leak under pressure. If the ladle, or the furnace lining, was not properly dried, porosity can result. Holes that are orange to yellow in color, and that are associated with a gray to yellow crystalline fracture of the casting, indicate that this porosity exists, and the castings will usually leak under pressure.

Dross inclusions occurring in copper-base alloy castings usually resemble fins in the side walls of the casting, and show a red and green color when fractured. This dross can be prevented by properly skimming the ladle, and by maintaining, during the pouring operation, an uninterrupted stream of metal that will completely fill the sprue.

Copper-base castings may also show rounded gas holes (or microporosity), brown, red, orange, or yellow in color; these are usually the result of a reducing atmosphere during the melting operation. Under such an atmosphere, the metal will dissolve hydrogen, and during the shrinkage which occurs in these alloys in the solidification phase, the gas holes are formed. Sometimes this porous structure seems to be evenly distributed, and in such cases the defect has probably been caused by overheating the metal and soaking it for too long a time.

A casting made of a copper-base alloy having a high tin content may show tin sweat, unless proper degassing procedures have been used. The pressure of the gases in the melt forces the low-melting-point tin to the outer surface of the casting, where it solidifies in small droplets.

Veining that occurs in copper-base alloy castings is due to weak cores that have developed cracks. The alloy constituent with the lowest melting point will penetrate these cracks, and give the casting a veined appearance. There may be a porous structure in the vicinity of the veining. This type of defect can be prevented by adding clay, silica flour, or iron oxide to the core mix, to give it a higher "hot strength."

Because of the extensive use made of copper-base alloys, many of your shipboard casting jobs will be repeaters. Your work will be simplified if you will maintain records on the sand and core mixes used, the melting practices employed, the gating and risering arrangements, and any measures taken to correct specific types of defects.

Nickel-Base Alloys

In nickel-base alloy castings, particular defects are apt to occur due to an excess of carbon. Only very small amounts can be tolerated, and any excess will cause brittleness. Sulfur also can cause defects, since it makes the nickel-base alloys susceptible to hot tears. S-Monel metal cannot tolerate lead; in the presence of silicon, which is an alloying element in modified S-Monel, lead causes cracking.

Pouring must be carefully done, with slag being skimmed from the ladle, and a skimming rod used to prevent any slag entering the sprue. Ramming the mold around the sprue will prevent sand erosion.

Nickel-base alloys are especially sensitive to gas absorption, and it will be necessary for you to give very careful attention to the melting practice if you are to prevent the development of porosity and gas holes. Watch the temperature to make sure that there is no excessive super-heating. In controlling temperature, do not try to determine it visually, but always use a properly calibrated pyrometer. Make sure that ladles and other items of pouring equipment are thoroughly dried, to prevent moisture pickup.

Aluminum Alloys

Aluminum castings are subject to contamination from other elements; and when this occurs the casting will be brittle and its physical properties will be lowered. Aluminum-copper alloys cannot tolerate magnesium contamination; aluminum-magnesium alloys cannot tolerate copper, iron, or silicon; aluminum-silicon alloys cannot tolerate iron or magnesium. You can guard against contamination by making sure that iron melting pots and melting tools are coated with a protective wash. The proper segregation of scrap metal will also help to prevent contamination.

Dross inclusion can result if the melt is not thoroughly skimmed. It can also be caused by poor gating technique or by carelessness during the pouring operation.

Pinhole porosity is a common defect in aluminum castings. The porosity may or may not show up on the surface of the casting, but it can be present as a scattering of very small gas holes throughout the casting. To prevent this defect, take comprehensive care during the melting and pouring operations. Particularly, take care that your melting tools are clean and dry; if you are using an oil-fired furnace, have the atmosphere slightly oxidizing; use degassing procedures to remove any gases which are dissolved in the melt.

Porosity in aluminum castings can also be caused by excessive moisture in the molding sand; in this case, the defects occur on or just below the casting surface. The resistance of the mold must be reduced when aluminum alloys are cast, because if there is too much resistance to free contraction the metal will hot tear and hot crack.

Ferrous Alloys

The production of ferrous castings is normally limited to Navy foundries where electric furnaces are available, since the high temperatures required are difficult to obtain in oil-fired furnaces. Furthermore, these temperatures are near the flow point of refractory furnace linings, and in the electric rocking furnaces slag formed by the melting of the lining can insulate the charge and make attainment of the correct superheat impossible.

If molten iron is held in the rocking furnace at superheating temperature, or held too long after the tapping temperature has been reached, it will cause an increase in the carbon content.

As with the nonferrous alloys, you must be careful to use well-dried ladles. They should be preheated, for control of the pouring temperature is essential. If pouring temperatures are too low, the casting will show such defects as surface laps, entrapped gas, or dross inclusions.

On the other hand, pouring temperatures higher than those required can cause a number of different types of defects: dross formation, excessive oxide, rough and dirty surfaces, high liquid shrinkage, and an increased tendency to hot tears and porosity.

TAPPING AND POURING THE HEAT

The pouring operation is a hazardous one, and requires teamwork on the part of the foundry personnel. Use the time during which the charge is being reduced to a molten state for checking on the preparation of equipment and of personnel. Check to see that the foundry floor is clear of obstacles, and that all tools and material that are not needed have been stowed away. Check the molds to make sure that they are securely clamped. Inspect the equipment that is to be used in conveying the molten metal from furnace to mold. Make sure that each man knows exactly what he is to do during the pouring operation.

PREHEATING THE LADLE (see fig. 12-1) is one of the most important steps in the preparation of the pouring equipment. The slightest moisture in the ladle lining can cause porosity in the casting. If enough moisture becomes pocketed under the molten metal, steam will rapidly form, and blow metal out of the ladle. You can see what a hazard this would be to nearby personnel.

If 3/4-inch holes on 4-inch centers have been drilled through a ladle shell, the steam generated during the drying out of a new lining will escape through these vents. But even if the lining has not just been renewed or patched, you must still preheat the lining, to eliminate moisture absorbed from the temperature. This preheating also ensures against loss of heat in the molten metal as it makes the trip from furnace to mold.

TEMPERATURE DETERMINATION must be made with an immersion or an optical pyrometer. Temperatures determined by observation are no better than guesses, and such methods as observing bubbling action, or the reaction of an iron thrust into the molten bath, should never be used except in emergencies.

Figure 12-2 shows a foundryman checking the temperature of the molten metal in the furnace shell prior to tapping. Figure 12-3 shows two ladle men tapping the furnace. Besides these two men, there is a third man (not visible in the illustration) controlling the rock of the furnace for the tapping by the portable pushbutton control of the variable rocking-control mechanism.

TAPPING THE FURNACE may involve more than drawing off the molten metal into the ladle. It may involve the addition of certain elements. When steel castings are being made, deoxidizers (aluminum or calcium-silicon-manganese) are added to the ladle when it is half full, to kill the heat.

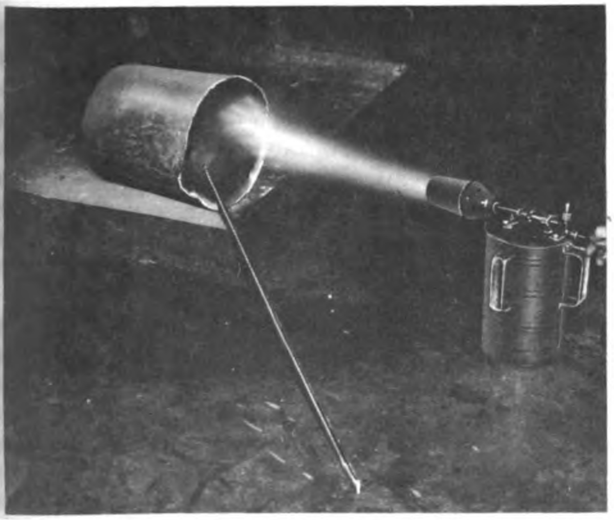

102.102

Figure 12-1. — Preheating the ladle.

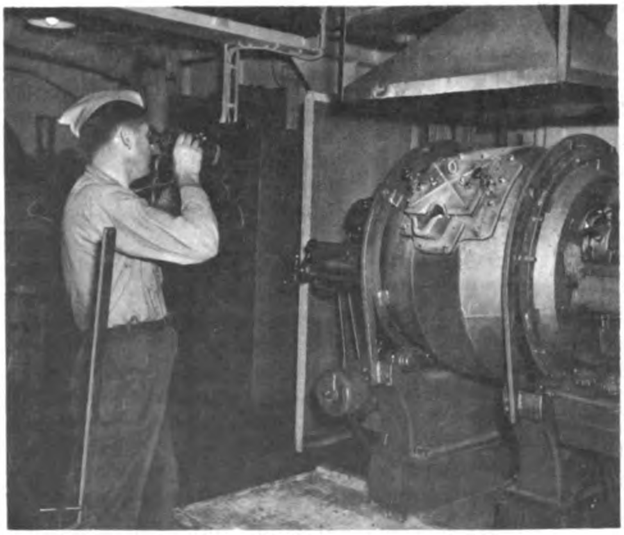

102.103

Figure 12-2. — Checking the temperature of the furnace charge with an optical pyrometer.

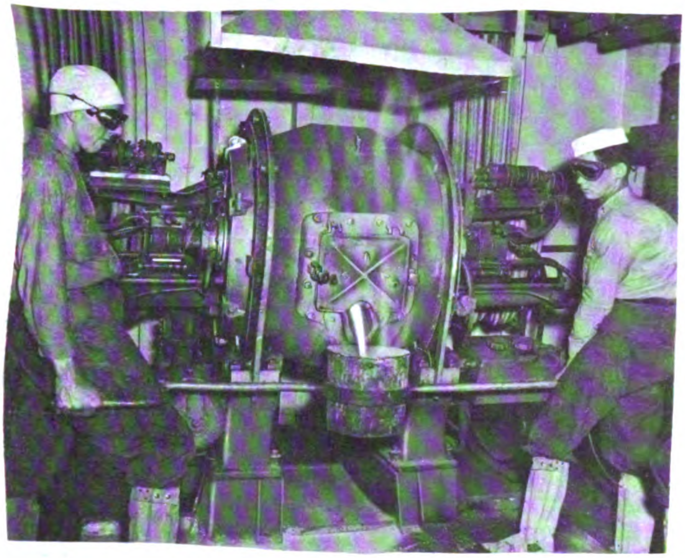

102.104
Figure 12-3.—Tapping the furnace charge into a bull ladle.

No ladle should ever be filled to more than 3/4 of its capacity. This precaution ensures that the metal can be transferred without spillage, since the ladle must be inclined 60° from horizontal before the liquid will flow over the lip. (See fig. 12-4.) Any metal that is spilled must immediately be doused with sand. Having the ladle only 3/4 full makes the pouring operation easier, because the ladle can be kept low, and the height from which the molten metal falls is kept at a minimum.

The POURING OPERATION is done with the ladle lip as close as possible to the pouring basin. The ladle should be skimmed carefully with dry metal rods; to use wooden skimmers may introduce moisture. Slag that is too fluid to be skimmed can be thickened by lightly coating the surface of the molten mass with dry silica sand. Continual skimming will increase oxide loss, so do your skimming just before pouring the mold.

Agitation of the molten metal while it is being transported can increase dross formation and gas absorption, particularly in aluminum and its alloys. When you are pouring a metal that forms dross, avoid a turbulent entry of the metal into the mold. Fill the sprue quickly, and keep it full to prevent the entrance of dross, and of air that would become entrapped in the casting.

102.105
Figure 12-4.—Teamwork in pouring.

Pouring temperatures that are too high can cause oxide or dross formation, segregation, high liquid shrinkage, and rough and dirty casting surfaces.

Once you start to pour, fill the pouring basin quickly, and keep it filled until the mold cavity is filled. The only interruption should be when you stop pouring into the sprue (as the metal reaches the riser level), and pour down the risers.

SHAKING OUT AND CLEANING THE CASTING

As soon as the casting has cooled in the mold to a temperature that will safely permit handling, it can be shaken out. With small castings, you will find this a simple procedure; jolting the flask on the foundry floor should cause the sand to break away and expose the casting. For large castings, it may be necessary to use a hoist for lifting off the several flask sections. Wear gloves when handling the casting, for it may still be hot enough to cause serious burns. Wear goggles when chipping or grinding castings, to prevent serious eye injuries.

With the casting out of the mold, use a wire brush to remove adhering sand. Unless you do so, the molding sand will later reduce the efficiency of the sandblasting operation.

The next step is the removal of sprues, gates, and risers. This may be done by chipping, sawing, or cutting with an oxyacetylene torch. If you use a chipping hammer, work a little away from the casting surface so as not to break into it and mar it. With a casting of cast steel, you will probably employ the acetylene torch. On aluminum, brass, and other soft metals, use saws and sprue cutters, and be careful not to bend the casting.

The minor roughnesses and burrs that remain on the casting surface can now be removed by grit or sand blasting. If there are any defects just below the casting surface, this blasting operation will reveal them.

For cast iron and steel, where high temperatures can cause the sand to fuse to the castings even when facings are used, the most practical method of cleaning is to use a tumbling barrel. Small, chilled castings, called stars, provide the abrasive action. The barrel should be rotated from 15 to 60 revolutions per minute, depending upon barrel diameter.

Castings must be filed or ground at all spots where projections were broken off. Aluminum castings should be filed, because aluminum tends to "load" a grinding wheel. Brass and bronze castings can usually be ground.

Grind only with an emery wheel that is running true, and grind on the face of the wheel, not on the side. Excessive wear on the side of a wheel can cause it to shatter. In using a stationary grinder, see that the toolrest is properly adjusted, and that the guards are in place. Never try to make adjustments while the wheel is in motion.

Use only tools that are in first class condition, and keep a firm hold upon them while you use them. Keep clear of the wheel to avoid injury in case control is lost. Disconnect a power tool from the power source as soon as you have finished using it.

Never work upon a casting suspended from a crane or a hoist; set it firmly on the deck or on a solid bench. The problem of holding a casting during machining operations can be solved by adding bosses or lugs. A boss will serve to hold a casting in a chuck; lugs provide for bolting a casting to a faceplate. Another aid is that of providing a recess or clearance for the tool, when you are finishing parts of a casting that are partly or wholly enclosed.

CAUSES AND PREVENTION OF CASTING DEFECTS

It has been stated previously in this training course that the ideal casting from the viewpoint of the Molder would be of such a shape that (1) all its parts or sections could be molded easily, (2) the casting could be fed from one riser at the highest point of the mold, and (3) the solidification would proceed from the lowest point of the mold to the riser. However, the design engineer may seldom get the desired results from the casting because of the shape limitations and the metal characteristics. The ability of the casting to act in a particular manner during the solidification stages should be recognized by all foundrymen. Therefore, it is necessary for the Molder, as well as the Patternmaker, and the design engineer to have an understanding of the characteristics of metals both in the liquid and the solid state. (See chapters 10 and 11.) This understanding and the basic design rules should be considered before a design is transformed into a three-dimensional object (pattern or casting). (See chapter 2.)

It has been noted that the design engineer, through the understanding of the basic design and the effects of faulty design for a casting, can modify the design--which would enable the Molder to handle the remaining problems by reasonable molding procedures.

Defects in castings are caused by improper molding procedures, by pattern equipment, or by the design of the pattern and casting. Poor sand control in the foundry can cause all of the defects that a Molder may encounter. This is one of the reasons that it is difficult to determine the cause of some defects.

One of the most prominent causes of casting defects is CARELESSNESS; its remedy is obvious. However, many casting defects can be pinpointed to either the pattern design or the equipment.

When determining the cause of any casting failure, remember that defects are more often due to a combination of causes, than to any one isolated cause. The use of properly kept records of previous castings, good sand control, and good molding procedures help eliminate casting defects.

Defective castings can result from a wrong decision made anywhere along the line of production—from the choice of sand, and the gating technique, through the selection of metal for the charge, the melting and pouring operations, and even in the shaking out and cleaning processes. All of these steps are necessary to the production of the casting. Any step may be the point where an error is committed that will render the end result unsatisfactory.

Control of the sand used, and the construction of the mold have been thoroughly discussed in chapters 6 and 7; cores and coremaking have been discussed in chapters 8 and 9. You might review these chapters at this point to see how the lack of control and of the proper care at these stages can result in faulty castings.

The causes and the prevention of casting defects which the Molder is responsible for are considered in the following sections. Remember that this is not a complete list of casting defects that could happen in foundry production. Additional information on casting defects may be found in the Bureau of Ships Foundry Manual, NavShips 250-0334.

SHRINKAGE CAVITIES AND BLOWHOLES

Shrinkholes, cavities, gas holes, pinholes, and sand or core blowholes are common defects in castings resulting from many different causes. It is often quite impossible to tell at first glance one defect from the other, however, it is a good idea to correct for all of them.

SHRINKHOLES and SHRINKAGE CAVITIES are holes, resulting from contraction and insufficient feed metal, formed during the time the metal changes from a liquid to a solid state. Such holes or cavities may result from drastic changes in section thickness, fillets that are too small or too large, or heavy sections of the casting that cannot be fed by risers. Improper ratio of the gating and risering system may also cause this condition. Redesigning the pattern and gating and risering system will tend to eliminate this defect.

GAS HOLES, PINHOLES, and BLOWHOLES are holes usually under the surface of the casting. These holes generally are found in groups and are formed in the same manner as shrinkholes and cavities. Other causes for these defects are (1) using a sand too fine for the casting size, (2) using sand that is too damp, (3) ramming the mold too hard, (4) improper venting through which the mold and core gases may escape freely, (5) using cores that are too hard or not thoroughly baked, (6) using damp or rusty chaplets, (7) using too much clay wash on gaggers, (8) not enough sand between gaggers and the mold cavity, and (9) pouring the molten metal against a chill that is damp or rusty.

SAND or CORE BLOWS are smooth cavities caused by the trapping of gas in the molten metal by improper venting of the mold. Sand blows are smooth depressed areas on the outer surface of the casting. Core blows are smooth depressed areas on the inner surface of a cored section or caused by a gas pocket in the casting above the cored cavity. On the pattern design a possible cause would be insufficient core prints. Another cause may be the improper design of the gating and risering system.

CRUSHES, DROPOUTS, AND STICKERS

A crush or dropout occurs when a part of the mold is crushed and drops into the mold cavity. It usually causes dirt and sand particles in some other part of the casting. A CRUSH may occur when the sand of the cope half of the mold does not fit the drag half, causing a crushed mold when the mold is closed and poured. It may be caused by a core being too large for the core prints, or insufficient cope overhang on the cope side of the core prints. Using worn patterns and core boxes and clamping the mold too tightly prior to pouring will also result in a crushed mold.

A DROPOUT is the falling of an overhanging body of sand into the mold cavity. This defect may be caused by improper draft on the inner surface of a deep draw or insufficient mold support in the cope half of the mold.

A STICKER occurs when sand sticks to the pattern, as the pattern is withdrawn from the mold. A sticker is due to poor pattern finish, which causes the sand to stick to the pattern. A poor pattern finish can be remedied by smoothing the rough spots and refinishing the pattern. A sticker may also be caused by backdraft or by not having enough draft on the pattern.

RUNOUTS, MISRUNS, AND COLD SHUTS

Misruns or cold shuts on a casting occur when the mold does not completely fill with molten metal, or when pouring is interrupted so that the metal does not fuse together. A MISRUN is defined as a casting not fully formed due to incompletely filling the mold cavity during the pouring operation. This defect may be recognized by the corners of the casting not being filled out or a smoothly rounded hole through the side wall of the casting. A COLD SHUT is an imperfect junction where two streams of molten metal meet but do not fuse together. Other causes of misruns and cold shuts are nonuniform section sizes, and worn patterns and core boxes, resulting in thin sections on the casting.

Proper pattern design should be followed closely to eliminate this type of casting defect. Maintenance and repair of patterns and core boxes are necessary. In addition, the proper gating ratio for the particular job is recommended.

RUNOUTS occur when a part of the mold is broken or cracked at the parting plane of the mold. This may be caused by weak sand, slip jackets too tight, weights placed on the mold carelessly, an imperfect parting of the mold, or the completed mold not setting properly on the bottom board.

SHIFTS

A SHIFT is a mismatch of the cope and drag of the pattern or of the mold and cores. This defect is caused by worn patterns or molding equipment. Loose or worn dowel pins in a pattern will result in movement of the pattern components during the molding procedure and cause a shift in the casting. The pins and guides on a flask should fit neither too loose nor too tight. Good pattern and molding equipment will minimize the occurrence of this defect. Another cause is the placing of the cope half of the mold wrong-end-to when closing the mold. When carrying a completed mold made from a snap-flask, the mold should be kept as level as possible because the cope half may slip on the drag half, causing a mismatch of the parting of the mold. Using slip jackets in a careless manner may also result in a shift. The ability to recognize and prevent this defect is especially important in repair ship or tender work because the majority of castings are made with loose parted patterns.

RAT TAILS, BUCKLES, AND SCABS

A rat tail, buckle, and scab all originate in the same way and differ mainly in the degree of defect. They are caused by uncontrolled expansion of the molding sand. If the condition of the molding sand is not too bad, a rat tail is formed. A RAT TAIL occurs when the surface of the sand buckles up in an irregular line that makes the casting look as though a rat has dragged his tail over it. If the sand expansion is greater, the casting defect is called a BUCKLE. If the sand expansion is even worse so that molten metal can get behind the buckled sand, the defect is known as a SCAB.

Rat tails, buckles, and scabs will be caused on a casting when the sand mold cannot expand uniformly when it becomes heated by the molten metal. If the mold does not expand to a certain extent (individual sand grains have to expand), the surface of the mold will buckle and cause a defect. The main cause of the sand being unable to expand properly is the presence of too many fines in the sand. The presence of too many fines in the sand causes the sand to pack much harder than necessary so that the sand's expansion is restricted. Addition of new sands to properly balance the sand distribution and reduce the percentage of fines is used to obtain better sand conditions. Another remedy is to add cereal flour, woodflour, and sea coal to the sand to act as a cushion.

Rat tails, buckles, and scabs may also be caused by the gating system if the gating arrangement causes an uneven heating of the mold by the molten metal. The cure for this type of casting defect is to regate the casting to obtain a uniform distribution of metal entering the mold cavity.

CUTS AND WASHES

A cut or wash is the erosion of the sand by the stream of molten metal. This defect often shows up as a definite pattern around the gates and causes dirt to be deposited in some other part of the casting. CUTS and WASHES are defects which are directly related to the gating system. If the in-gates of a mold are located so that the molten metal entering the mold impinges or strikes directly on a core or a mold surface, the sand will be washed away by the eroding action of the stream of molten metal. These defects will then appear on the casting as a rough section, usually larger than the designed section thickness. Sand inclusions are usually associated with cuts and washes as a result of the eroded sand being carried to other parts of the casting by the stream of molten metal. INCLUSIONS are just what the name implies. They are often accompanied by other casting defects which provide loose sand in the mold.

Inclusions are caused when the gating system permits dirt, slag, or dross to be carried into the mold cavity. One way to eliminate inclusions is to provide a choking action at the sprue base by using a tapered sprue of the proper designed cross-sectional area. If it is impossible to provide the proper choking action in the gating system, a skim core or strainer core should be used at the base of the sprue to trap dirt and slag.

METAL PENETRATION AND SWELLS

Metal penetration causes rough castings, the molten metal seeps in behind the sand grains and gives a rough surface to the casting. Such defects on a casting cause difficulty in cleaning because the sand grains are held by little fingers of metal. Metal penetration is caused by ramming the mold too soft or where there is too little space between the pattern and the flask. Using a large flask will permit harder ramming of the mold between the pattern and the flask and reduce penetration of the metal between the grains of sand.

METAL PENETRATION occurs when the molten metal penetrates into the sand and produces an enlarged, rough surface on the casting. If the metal penetration is not too deep, it will have the appearance of a SWELL. A SWELL is an enlarged part of a casting resulting from soft ramming and is closely related to metal penetration. Coarse sand, high permeability, and low mold hardness are the principal sand properties which cause metal penetration. A sand that is too coarse will have larger openings between the sand grains (high permeability). Because of the larger openings, the molten metal does not have any difficulty in penetrating the sand. A low mold hardness (soft ramming) condition offers a very soft surface for the molten metal, which the metal can easily penetrate. To correct metal penetration due to coarse sand and high permeability, it is recommended that fine sand be added to the base sand to have a finer sand distribution and reduce the permeability of the sand. Harder and improved ramming of the mold is a cure for metal penetration caused by low mold hardness. If the permeability of a mold cannot be reduced, a mold wash may be used to eliminate penetration.

REBABBITTING STANDARD NAVY BEARING SHELLS

The casting procedures discussed in this chapter have been those involved in making castings poured in a mold. Another process frequently performed in Navy foundries—that of rebabbitting bearing shells—requires pouring the metal into the bearing shell itself, rather than into the mold.

Antifriction metal, a genuine babbitt metal, is used for all bearing surfaces requiring a hard, ductile, white metal alloy. However, in addition to properly melting and pouring the antifriction alloy, there are several steps involved in rebabbitting a bearing shell. These steps might be enumerated as follows:

1. Removing the old babbitt.
2. Cleaning the shell.
3. Fluxing the surface to be babbitted.
4. Tinning the shell.
5. Preparing the shell for the pouring operation.
6. Preheating the mandrel.

REMOVAL OF OLD BABBITT can be accomplished by chipping, machining, or melting the old metal, and then scraping the inside of the shell with a wire brush or a scraping tool. Since the shell is to be tinned, the cleaned surface must be one that will ensure a clean metallic contact. Be careful not to overheat the shell, or the subsequent tinning process will be difficult.

CLEAN THE SHELL by first using a degreasing solvent to remove oil and grease, and then washing the shell in a hot alkaline solution. A weak lye solution, or one made of 4 to 6 ounces of Oakite to a gallon of water, is suitable. After putting the shell through this solution, rinse it in fresh water.

To clean the shell of oxide film and scale, you may find that pickling is necessary. The pickling solution can be swabbed or painted on, if no bath is available. A recommended solution is 1 part of muriatic acid to 4 parts of water. A flash or instantaneous pickle will serve for cleaning bronze shells, but from 2 to 5 minutes will be needed for properly cleaning shells of steel or cast iron. After pickling, the shell must again be rinsed in fresh water.

If there are any holes through the shell, plug them with dry asbestos or magnesia. Use a fireclay wash to coat surfaces that are not to be tinned. The shell is now ready for fluxing.

FLUXING THE SURFACE OF THE SHELL may be done either by swabbing or dipping. Old or weak flux will not properly clean the surface, so it is important that you use a freshly prepared mixture. You can make a suitable flux by mixing equal parts, by weight, of zinc chloride and water.

TINNING THE SHELL with a thin layer of solder or tin is necessary for bronze and steel shells. This coating, with its low melting point, will help to produce a good bind between the shell and the babbitt. The tinning bath may be of pure tin, or of solder that is 50 percent tin and 50 percent lead. When the bath is at a temperature of 650° F for tin, or between 575° and 600°F for solder, dip the bearing shell into the bath, and hold it there until it reaches the bath temperature. Then withdraw it and inspect it for flaws. You must scrape, re-flux, and re-tin any areas that have not been adequately coated.

PREPARE THE SHELL FOR POURING as soon as you are satisfied that it is adequately tinned. Figure 12-5 illustrates a simple jig for holding the bearing in place during the pouring operation. The mandrel, which may be a piece of thoroughly clean steel tubing or pipe, is bolted to a base plate. The two halves of the bearing, wired together, are placed around it, with spacers wrapped in asbestos paper inserted between the halves. A crossbar is bolted to the top of the mandrel after the bearing is set in place.

When you use a jig like the one shown, have the mandrel from 3/8 to 3/4 inch smaller in diameter than the diameter of the bearing. This provides an allowance for peening and machining. Check the jig assembly for leaks that would allow metal loss during the pouring.

PREHEATING THE MANDREL will reduce its chilling effect on the molten metal, and will also permit solidification to start, not at the mandrel, but at the bearing shell. This preheating should be done while the shell is being readied. Use a torch for heating, and raise the temperature of the mandrel to at least 600°F. Be sure that no moisture remains on the mandrel nor on the bearing. Moisture may not only cause porosity in the liner, but it can cause the hot metal to spit, endangering personnel.

As soon as possible after the assembly is ready, pour the babbitt; the tinned surface of the bearing shell should still be liquid enough to provide the required bonding. Pour slowly and steadily, and pour the entire bearing without interruption, filling the bearing cavity to the top.

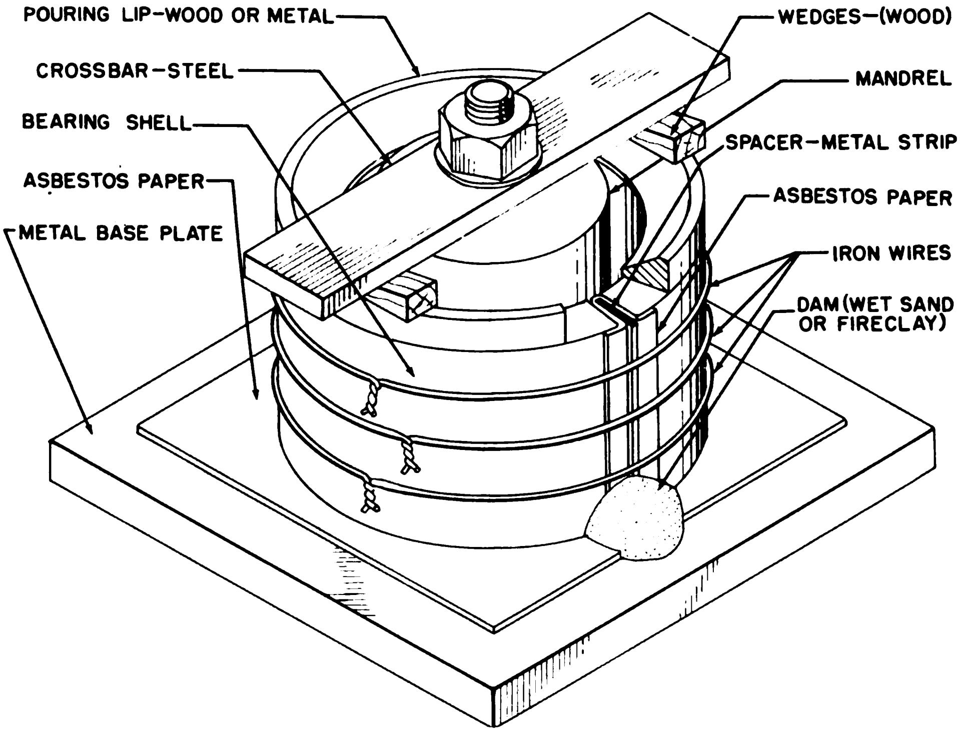

102.106

Figure 12-5.—Jig for rebabbitting bearings.

If an insufficient amount is poured into the cavity, it will not be possible to get a sound bearing by pouring in an additional amount. Once solidification occurs in the metal first poured, additional metal will not bond with it. For this reason, it is advisable to melt more metal than you think is actually required. Any excess metal can be pigged and remelted.

The elimination of gas and air is of vital importance in producing a good bearing. If the stream of metal is too heavy, or if it is poured too rapidly, trapped air will cause bubbles and seams in the liner. Puddle the metal during the pouring operation, using a preheated rod.

When the metal has been poured, wrap the bottom of the bearing shell assembly with wet cloths to start directional solidification, and repeat this operation until the babbitt solidifies. If after solidification the sides of the shell are drawn together, the shell can be returned to its original dimensions by peening the inner surface of the liner. The halves of the shells can be separated by sawing through the babbitt on each side.

As with other castings, failure to exercise proper care at each step of the process can result in defects in a cast babbitt liner. Checked, cracked, or crumbling bearings can result from poor bonding; contraction stresses can occur during cooling, if the metal was poured at too high a temperature. The proper relation between the temperature of metal, mandrel, and bearing shell is a very important factor.

The presence of air pockets in the liner, or between liner and shell, is a serious defect. Oil collecting in these pockets will prevent uniform transfer of heat to the back of the bearing. Hot spots can develop, and may progress until the bearing metal becomes hot enough to melt and so produce bearing failure.

CHAPTER 13

REPAIR DEPARTMENT

Repair ships and tenders are in effect floating bases, capable of accomplishing a great variety of general and specialized jobs. They are like small-scale Navy yards, with the same primary mission—to provide repair facilities and services to the forces afloat. The repair ships provide general or specific repairs to all types of ships; the tenders furnish facilities for a specific type of ship.

DEPARTMENT ORGANIZATION

The type of repair ship to which you will probably be assigned will be one of the following: Destroyer tender (AD), repair ship (AR), internal combustion engine repair ship (ARG), or submarine tender (AS). When you are assigned to shore duty at your trade, you will almost certainly be assigned to a billet in the Repair Department of the shore installation. Since the shore-based installation has the same essential mission as the repair ship, the organization will be similar. Whether the activity is a submarine or destroyer tender, a repair ship, or a ship repair unit, at a continental or advanced base, the general organization will be similar to the one shown in figure 13-1. Specific shops may be under different divisions than those shown here.

In this illustration, the foundry and the pattern shop (with which the Molder must usually work) are not shown in the same division. Depending largely upon the ship's structure, the foundry may be in the R-1 or in the R-2 Division. Regardless of the division, your duties will be the same.

Shop organization also may vary from one duty station to another. In a large shop, there may be a degree of specialization, with individual crews performing separate operations, such as making cores, ramming molds, melting the metals, pouring castings, and cleaning and machining castings. In the smaller shops, all types of operations will be performed by all members of the group.

Whatever your assignment, the following factors are the ones upon which you should inform yourself as soon as possible: (1) where your orders and assignments originate, (2) where you should go for advice and assistance, and (3) exactly what the supervising petty officer expects of you.

Although not specifically mentioned in the Quals, some knowledge of what goes on in other shops is always helpful. The work of the pattern shop, for instance, should be familiar to you; cooperation between the Molder and the Patternmaker is essential in all the phases of a job, and the better you understand the work of the pattern shop, the better you can work with the Patternmaker. Other ratings with which you will work closely, especially on castings, are the Machinery Repairman and the Shipfitter.

REPAIR OFFICER

On a repair ship or tender where repairs to other ships is a primary function, the repair officer is the head of the repair department. The repair officer is charged with the accomplishment of repairs on those ships granted availabilities by competent authority. He is responsible for the upkeep, operation, and maintenance of the equipment assigned to the repair department; and for the training, direction, and coordination of personnel assigned his department. He is also responsible for the proper performance of the following specific functions:

1. The preparation of repair schedules.
2. The supervision and inspection of repairs and services.
3. The preparation of reports, forms, and orders in connection with assigned functions and duties.
4. Cleanliness and upkeep of spaces assigned. He may be assigned duties outside of his

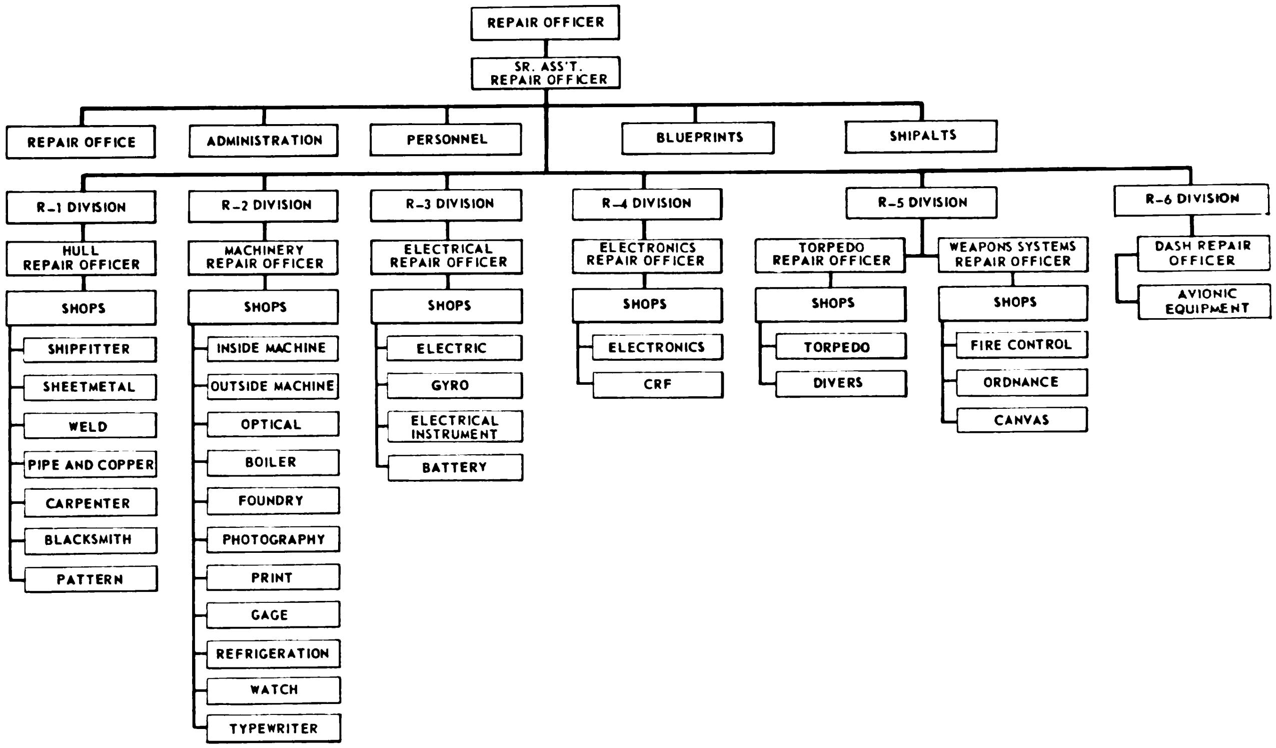

63.10

Figure 13-1.—Repair department organization.

department or additional duties within his department, as is true with all other department heads.

The first responsibility of the repair officer is the maintenance of a well-organized and efficiently operated department, or, in other words, ensuring that his subordinates are performing as required. To do this he issues and enforces repair department orders which govern department procedures. He, like other department heads, is also responsible for enforcing orders of higher authority. He must know the current workload and capacity of his crew and facilities, and keep the staff maintenance representative informed of the current status in order that the latter officer may properly schedule and assign ships. He is responsible for the review of work requests received via the staff maintenance representative from the ships assigned for repair, and for acceptance or rejection of the individual jobs according to the capacity of his department. He is responsible for the review and acceptance of any work lists or work requests which develop after the availability of a ship has started. He is responsible for operating his department within the allotment granted, and for the initiation of requests for further funds if they are required. He must ensure the accuracy, correctness, and promptness of all correspondence, including messages, prepared for the commanding officer's signature. The repair officer is charged with the review of all personnel matters arising within his divisions such as training, advancement in rating, assignment to divisions and leave. In order to acquire a thorough knowledge of conditions and ensure adequate standards, he must make frequent inspections of his department and require his division officers to make corrections as necessary.

ASSISTANT REPAIR OFFICER

The assistant repair officer is charged with the responsibilities of the repair officer in his absence, and otherwise will carry out those responsibilities which the repair officer may delegate to him. He is usually responsible for the internal administration of the department. He will handle repair department correspondence and messages, and the preparation of any reports which may be required. He is responsible for e keeping of adequate files, records, and reference materials, such as plans and manufac- rers' technical manuals. He is responsible for e details of the training program for personnel f the department. His responsibilities also in- lude the routing of job orders and the dissemina- on of any information such as department rders or data necessary to the welfare of the ersonnel. In addition to general office adminis- ation, he is often assigned the specific jobs of eeping progress reports on all outstanding ork; and preparing requisition data for special aterial, which requires working closely with e supply department in order to expedite the reparation of requisitions and to initiate follow- ps on outstanding requisitions.

THER ASSISTANTS

In addition to the assistant repair officer, the epair officer also has the following assistants. The specific responsibilities and shops assigned ay vary.)

1. R-1 Division, Hull Repair Officer. Re- ponsible for the proper functioning of the pat- rn, carpenter, shipfitter, pipe and copper, anvas, and welding shops.

2. R-2 Division, Machinery Repair Officer. esponsible for the functioning of the foundry, oiler, upper (light), lower (heavy), and outside achine shops.

3. R-3 Division, Electrical Repair Officer. esponsible for the proper functioning of the lectrical repair, electrical instruments, gyro, nd battery shops.

4. R-4 Division, Electronics Repair Officer. esponsible for all repair and alteration work ccomplished by the electronics and calibration hop.

5. R-5 Division, Weapons Systems Repair fficer. Responsible for the proper functioning f the ordnance repair, fire control, sonar, ptical, and instrument shops.

6. R-6 Division, Dash Repair Officer. DASH—Drone Antisubmarine Helicopter)—Re- ponsible for the repairs of avionics equipment nd engines, and minor structural damage. rranges for major overhauls with shore facili- ies.

7. Diving and Salvage Officer. The duties of he diving and salvage officer may constitute a eparate assignment, or may be assigned as an dditional duty to one of the division officers of he repair department. His principal responsibility is the personal supervision of all diving operations. He is responsible for the maintenance and inspection of diving equipment, to ensure that it is always ready for use and in perfect condition. He must also enforce compliance with the diving instructions and precautions given in the U.S. Navy Diving Manual, and the Bureau of Ships Technical Manual.

The diving and salvage officer is also responsible for the adequacy and readiness of salvage gear including the rigging equipment, line, cable and chain, and of underwater tools such as burning, cutting, and welding outfits.

8. Gas-Free Engineer—Aboard a repair ship or tender, the R-1 Division Officer (Hull Repair Officer) usually has the collateral duty of gas-free engineer. It is his responsibility to analyze conditions of closed or poorly ventilated spaces and of areas where hot work is to be performed. The gas-free engineer must ensure that no danger of suffocation of personnel—or hazard to personnel or equipment from noxious or explosive gases or from explosive or flammable materials—exists during any operation aboard ship or on ships alongside. He advises the repair officer and the commanding officer in matters concerning the safety of personnel working in hazardous locations.

REPAIR PROCEDURES

Organization has a wider scope than the setting up of the various divisions, and of the shops within the divisions. It involves formulating practical plans for the procurement of necessary materials, the delegation of work responsibilities, and the production of work that is satisfactory in quantity and quality.

There will always be an officer in charge of each repair department, and one in charge of each division; but as an ML2, you may be called upon at times to act in the capacity of shop supervisor, and perhaps as the division duty petty officer. You will soon learn that good organization involves the ability to get your crew working smoothly together toward the accomplishment of the tasks on hand. You will further learn that this smooth performance is possible only when existing orders, instructions, and safety regulations are being observed; proper equipment is being used, and being operated by competent and authorized personnel; and the men on the various jobs are expediting them at reasonable speed.

The ML2 who is charged with responsibility for a shop (or division) must perform the following functions:

1. Plan, schedule, and check the progress of the shop workload.
2. Approve or disapprove, as necessary, any special requests of the shop personnel.
3. Ensure that all work is done in a satisfactory manner.
4. Expedite and inspect all jobs done.
5. Enforce safety regulations.
6. Maintain order and discipline in the shop.
7. Inspect the shop when not in use, to make sure that it is clean and shipshape; inspect the shop in use periodically and at the end of working hours.
8. Sign custody receipts for tools and equipment issued to the shop.
9. Maintain the necessary records, and make inventories (as directed by your division officer).
10. Make daily reports (to the division officer when underway, otherwise to the repair duty officer) concerning any special jobs in progress, the number of men working at night, and any unusual conditions.

Just as the mere drawing up of an organization chart does not ensure good organization of a repair department, a division, or a shop, so the listing of duties does not get them accomplished. Assigning a competent man to the task, making sure that he has proper materials and equipment, and inspecting the work and the working spaces from time to time, are necessary functions of the man in charge. See that the men have clear instructions, and have them follow standard procedures. Give them occasional breaks, when they show signs of fatigue. Let your standards be flexible enough to allow for changing conditions, and as far as possible, make them uniform for everyone working under your supervision.

A knowledge of the information included in the following sections will be helpful in the efficient performance of your job.

REPAIRS AND ALTERATIONS

Corrective maintenance work can be divided into the general categories of (1) repairs, (2) alterations, and (3) alterations equivalent to repairs.

A REPAIR is defined as the work necessary to restore a ship or an article to serviceable condition without change in design, in materials, or in the number, location, or relationship of parts. Repairs may be accomplished by ship's force, by repair ships and tenders, or by naval shipyards or other shore-based activities.

An ALTERATION is defined as any change in the hull, machinery, equipment, or fittings which involve a change in design, in materials, or in the number, location, or relationship of the parts of an assembly, regardless of whether it is undertaken separately from, incidental to, or in conjunction with repairs.

Alterations must be authorized by competent authority. The two types of alterations that are of primary concern to you are NAVALTS and SHIPALTS. A NAVALT is an alteration that affects the military characteristics of a naval ship. A SHIPALT is an alteration under the technical cognizance of the Bureau of Ships, regardless of whether or not it affects the military characteristics of the ship. Thus an alteration might be only a SHIPALT or it might be both a SHIPALT and a NAVALT. The same principle applies to alterations under the technical cognizance of other bureaus.

An ALTERATION EQUIVALENT TO A REPAIR is an alteration which meets one or more of the following conditions:

1. The substitution, without other changes in design, of materials which have previously been approved by the Bureau of Ships (or other cognizant bureau) for similar use and which are available from standard stock.
2. The replacement of wornout or damaged parts, assemblies, or equipment requiring renewal, by those of later and more efficient design previously approved by the Bureau of Ships (or other cognizant bureau).
3. The strengthening of parts which require repair or replacement in order to improve reliability of the parts and of the unit, provided no other change in design is involved.
4. Minor modifications which involve no significant changes in design or functioning of the equipment but which are considered essential to prevent recurrence of unsatisfactory conditions.

Only the bureau exercising technical control over the article, or the authority to whom such technical control has been delegated by that bureau, may designate an alteration equivalent to a repair and approve it for accomplishment.

AVAILABILITY

Under normal peacetime operating conditions, the type commander or his designated representative schedules and grants periods of availability alongside repair ships for those units which require them. Navy Regulations defines availability as the period of time assigned to a ship by competent authority for the uninterrupted accomplishment of work at a repair activity. The different conditions and purposes of availability are:

1. A REGULAR OVERHAUL is an availability for the accomplishment of general repairs and alterations at a naval shipyard or other shore-based repair activity. Regular overhauls of ships are cyclic; the period between overhauls for each type ship is established by the type commander and the Bureau of Ships.

2. A RESTRICTED AVAILABILITY is an availability for the accomplishment of specific items of work by a repair activity with the ship present. Many of the ships which come alongside a repair ship or tender will have been granted this type of availability.

3. A TECHNICAL AVAILABILITY is an availability for the accomplishment of specific items of work with the ship NOT present. A technical availability is granted for a unit of equipment that can be detached and left for repairs while the ship continues on its mission. For example, when an auxiliary pump needs repairing, a technical availability may be granted. Since the ship will not be present during the availability, arrangements must be made for the ship to deliver the defective equipment to the repair activity and to call for it on completion of repairs, or to provide adequate shipping instructions.

4. An INTERIM OVERHAUL is a scheduled availability of not more than one-half the duration of a regular overhaul for the accomplishment at a naval shipyard or other shore-based repair activity of necessary repairs and urgent alteration. Normally, an interim overhaul is scheduled approximately midway between regular overhauls.

VOYAGE REPAIRS is emergency work which is necessary to enable a ship to continue on its mission and which can be accomplished without requiring a change in the ship's operating schedule or in the general steaming notice in effect.

An UPKEEP PERIOD is a period of time assigned by competent authority to a ship while moored or anchored, for the uninterrupted accomplishment of work by the ship's force or other forces afloat. Ships are assigned upkeep periods at more or less regular intervals, usually between cruises or periods of operations.

5. A SUPPLY AVAILABILITY is a period of time assigned a ship by competent authority for the uninterrupted accomplishment of a supply overhaul. A supply overhaul is normally scheduled to coincide with a regular overhaul.

A SUPPLY OVERHAUL is the work involved in the purification and adjustment of on-board stocks and records to bring them in line with prescribed allowances or other stockage objective criteria.

WORK REQUESTS

When a ship receives its employment schedule, or is otherwise notified, prepares the necessary paperwork in advance of the scheduled availability period.

The Current Ship's Maintenance Project (normally a part of the Material History) is used as a basis for advance preparation of work requests. The CSMP consists of three cards: the Repair Record, NavShips 529 (blue); the Alteration Record, NavShips 530 (pink); and the Record of Field Changes, NavShips 537 (white). As a repair is required or an alteration or field change is authorized, the applicable card is filled out and placed in the Material History adjacent to the proper history card. When an availability is authorized, work requests are made out on outstanding work indicated by the CSMP. (The PLANNED MAINTENANCE SYSTEM of 1963 may eventually replace the CURRENT SHIP'S MAINTENANCE PROJECT. For additional information on the Planned Maintenance System, see chapter 14 of this training course.)

Work requests are forwarded for review to the type commander of the requesting ship. (Fig. 13-2 shows a sample work request.) After the work requests are screened they are forwarded to the repair ship assigned to do the work. This is normally done well in advance of the assigned period of availability so that the repair department personnel can schedule the work and make any necessary preparations.

Arrival Conference

The arrival conference between representatives of the ships, the repair department, and usually the type commander's representative, serves to clarify all uncertainty for the repair department concerning each work request. Jobs are more specifically defined if necessary and priorities are settled.

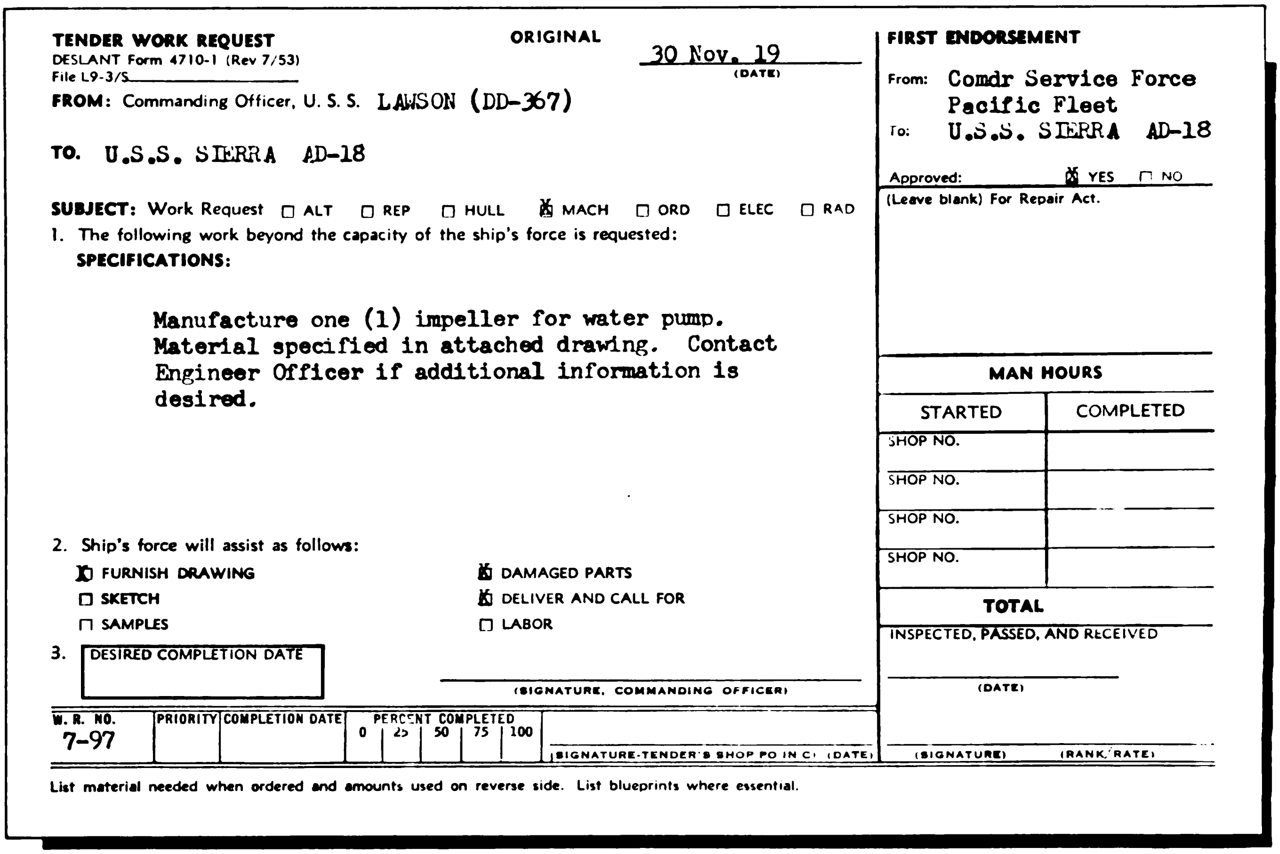

TENDER WORK REQUEST
DESLANT Form 4710-1 (Rev 7/53)
File L9-3/S

ORIGINAL

30 Nov. 19
(DATE)

FROM: Commanding Officer, U. S. S. LAWSON (DD-367)

TO. U.S.S. SIERRA AD-18

SUBJECT: Work Request ☐ ALT ☐ REP ☐ HULL ☒ MACH ☐ ORD ☐ ELEC ☐ RAD

1. The following work beyond the capacity of the ship's force is requested:
SPECIFICATIONS:

Manufacture one (1) impeller for water pump. Material specified in attached drawing. Contact Engineer Officer if additional information is desired.

2. Ship's force will assist as follows:

☒ FURNISH DRAWING
☐ SKETCH
☐ SAMPLES
☒ DAMAGED PARTS
☒ DELIVER AND CALL FOR
☐ LABOR

3. DESIRED COMPLETION DATE

(SIGNATURE, COMMANDING OFFICER)

W. R. NO.	PRIORITY	COMPLETION DATE	PERCENT COMPLETED 0 25 50 75 100	(SIGNATURE-TENDER'S SHOP PO IN C) (DATE)
7-97				

List material needed when ordered and amounts used on reverse side. List blueprints where essential.

FIRST ENDORSEMENT

From: Comdr Service Force
Pacific Fleet
To: U.S.S. SIERRA AD-18

Approved: ☒ YES ☐ NO

(Leave blank) For Repair Act.

MAN HOURS	
STARTED	COMPLETED
SHOP NO.	
SHOP NO.	
SHOP NO.	
SHOP NO.	
TOTAL	

INSPECTED, PASSED, AND RECEIVED

(DATE)

(SIGNATURE) (RANK/RATE)

5.144

Figure 13-2. —Sample work request.

Arrangements are also made for the repair ship to provide the primary services of steam and electricity in sufficient quantity to take care of heating and lighting requirements and to provide limited power for ships alongside. In addition to these services, the repair ship may take over communication watches. Fresh water and fuel requirements are not usually supplied except from yard or district barges.

Processing the Job Order

The real work of the repair department begins when the work requests are accepted by the repair officer at the time of the arrival conference. Each work request is recorded in the repair department log of incoming requests and is assigned a specific job order number. The original copy is filed in the repair office in a WORK OUTSTANDING file and the carbon copies are passed immediately to the appropriate shops. From this point on, the work request is referred to as a JOB ORDER.

The leading petty officer of each shop calls at the repair office one or more times during the day to pick up new job orders. He indicates on each order his estimate of the time in man-hours required to complete the work. Then he reviews each job order with the division officer and they work out the relative priority of each job. Sometimes it is desirable to complete a number of small jobs before assigning a large number of the shop personnel to a single major job; on other occasions it may be more efficient to reverse this procedure. As the work proceeds, additional conferences and continuous revisions of priorities may be required. The men are assigned jobs as fast as they complete previous work. Starting time is indicated on the job order.

It may be necessary to request other shops to help with certain jobs. For example, a Machinery Repairman working on the emergency repair of a pump, discovers that he will require a casting of the impeller. Because time does not permit waiting for a delivery from the supply depot, the item will have to be manufactured. He prepares and forwards a supplementary job order or intershop work request to the foundry, giving all the pertinent data and referencing the basic job order. (See fig. 13-3.) Because the Molder will require a pattern to make the casting, he will prepare and forward an intershop work request to the pattern shop. The shop supervisor or leading petty officer usually signs these supplementary job orders. (See fig. 13-4.) While waiting for the pattern and casting to be completed, the Molder and Machinery Repairman take up other jobs. When the pattern is completed it is sent to the foundry. The intershop work request is routed to the repair office where it is attached to the master or basic job order.

The procedure for routing the supplementary job orders may vary from ship to ship, but they all will be attached to the master copy or basic job order before the departure report is completed at the end of the ship's availability.

If the work to be accomplished cannot be brought aboard the tender or into the shop, outside repair personnel are assigned under the supervision of the leading petty officer in the shop.

In the process of accomplishing repair work, the men must requisition supplies from the supply storerooms. Detailed records of the materials used and the number of man-hours spent on each job are kept on file in the repair office.

WORK AND PROGRESS REPORTS

Progress on the various jobs must be closely followed by those responsible for the jobs. Normally, the division officer makes several rounds of the shops and outside activities during the day. He settles differences of opinion between ship and repair personnel on the conduct of any particular job, expedites supplementary job orders for other divisions, and eliminates bottlenecks in the course of progress.

Progress reporting varies with each repair department. It may be an informal verbal report by shop petty officers who pass the word on to the repair officer, or it may be a written report submitted on mimeographed forms. Entries listed by number and a short work description for each outstanding job order in the shop and

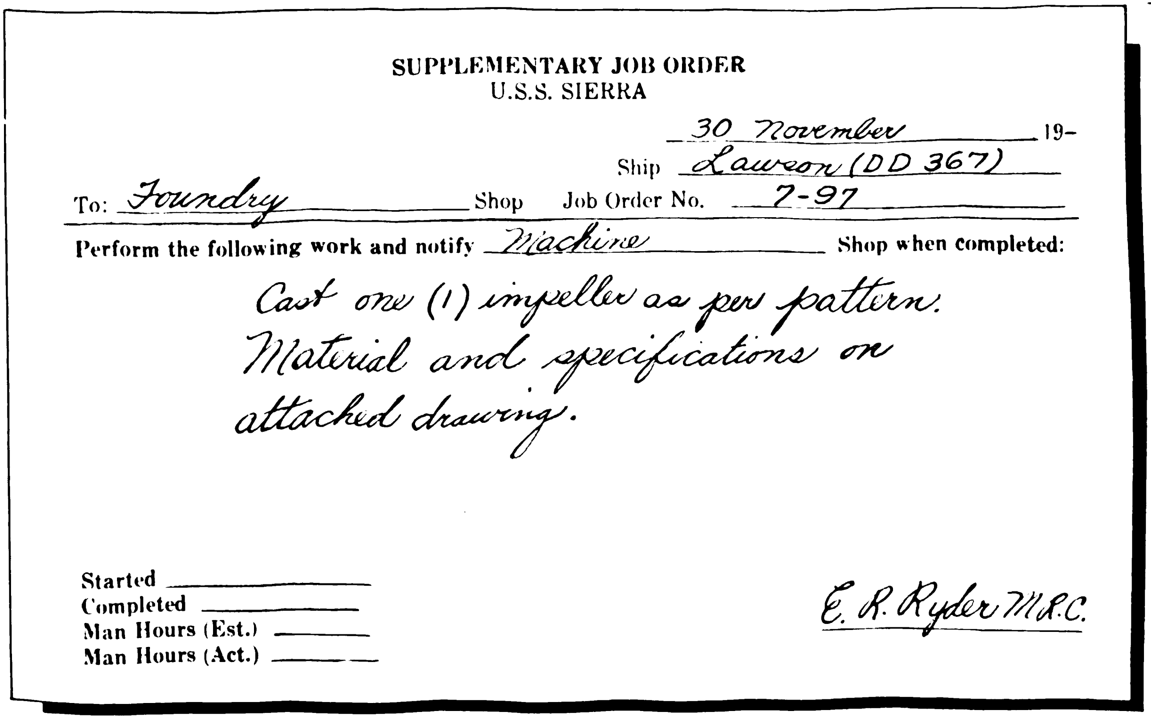

SUPPLEMENTARY JOB ORDER
U.S.S. SIERRA

30 November 19–
Ship Lawson (DD 367)
To: Foundry Shop Job Order No. 7-97

Perform the following work and notify Machine Shop when completed:

Cast one (1) impeller as per pattern. Material and specifications on attached drawing.

Started ________
Completed ________
Man Hours (Est.) ________
Man Hours (Act.) ________

E. R. Ryder MRC.

18.1

Figure 13-3.—A supplementary job order or intershop work request (Machine Shop to Foundry).

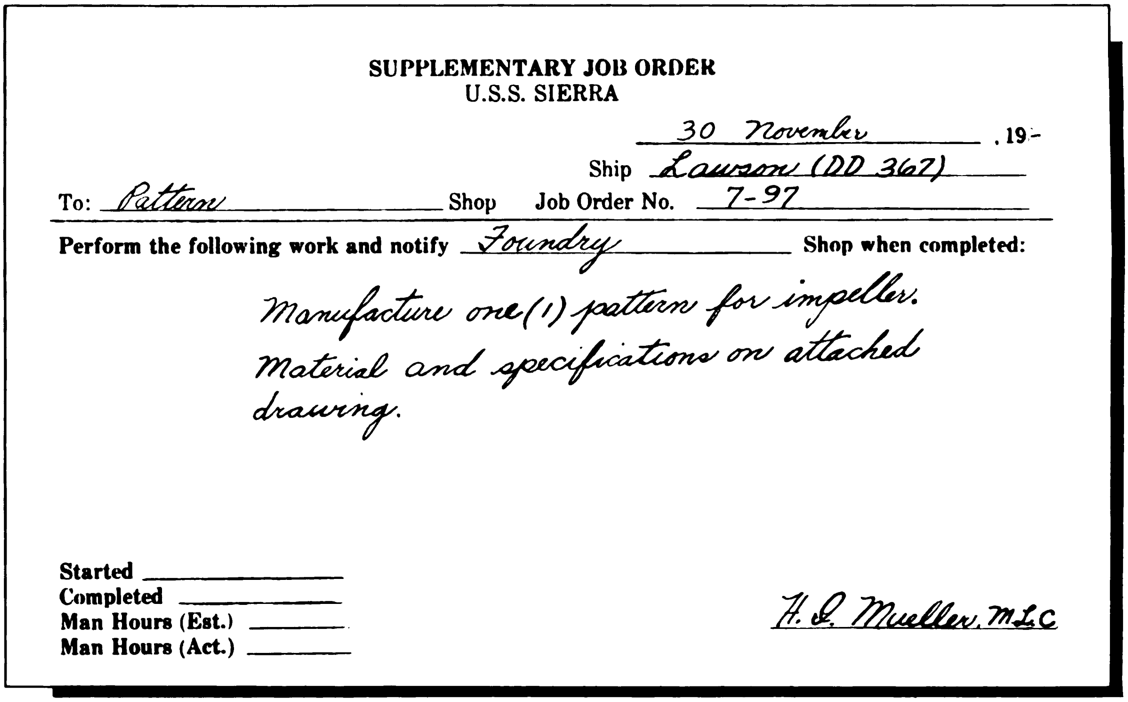

SUPPLEMENTARY JOB ORDER
U.S.S. SIERRA

30 November, 19-
Ship Lawson (DD 367)
To: Pattern Shop Job Order No. 7-97

Perform the following work and notify Foundry **Shop when completed:**

Manufacture one (1) pattern for impeller. Material and specifications on attached drawing.

Started ______
Completed ______
Man Hours (Est.) ______
Man Hours (Act.) ______

H. G. Mueller, MLC

18.2

Figure 13-4. —A supplementary job order or intershop work request (Foundry to Pattern Shop).

the percentage of the job completed are made daily by the leading petty officer. (See fig. 13-5.) The division officer receives and notes the report list and turns it over to the repair officer. This progress report, if it is conscientiously made, can be of great value to the repair officer in estimating the amount of work carried and the actual progress being made. Information for this report is usually obtained from work progress logs.

DEPARTURE REPORTS

A DEPARTURE REPORT for each availability completed is prepared by the repair ship and contains the following entries: work request number, job order number, item of repair, shops assigned, date completed, man-hours required, number of job orders assigned to the ship, number of job orders canceled, reason for cancellation, and the number of job orders completed.

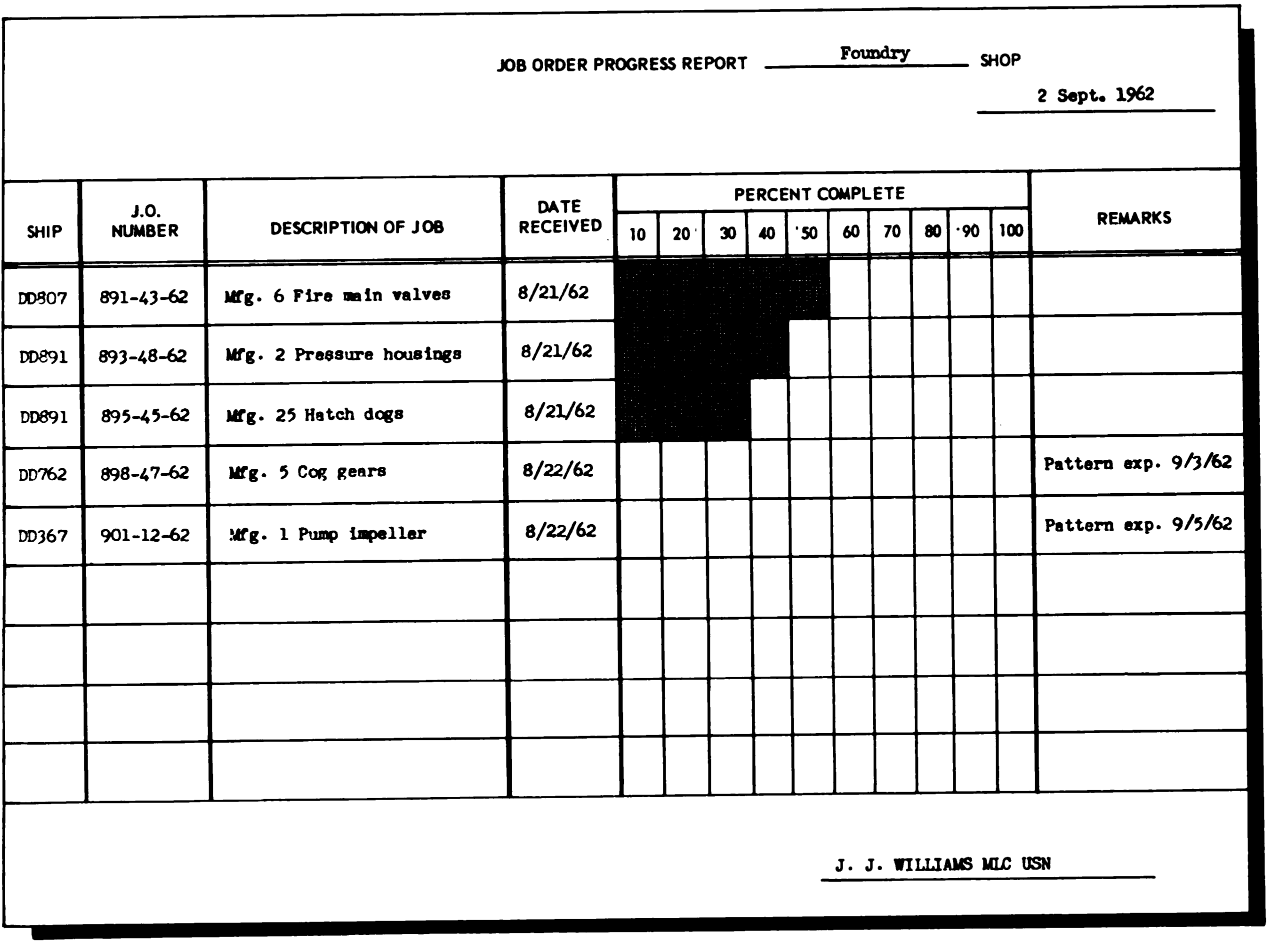

JOB ORDER PROGRESS REPORT Foundry SHOP

2 Sept. 1962

SHIP	J.O. NUMBER	DESCRIPTION OF JOB	DATE RECEIVED	PERCENT COMPLETE										REMARKS
				10	20	30	40	50	60	70	80	90	100	
DD807	891-43-62	Mfg. 6 Fire main valves	8/21/62	▨	▨	▨	▨	▨						
DD891	893-48-62	Mfg. 2 Pressure housings	8/21/62	▨	▨	▨	▨							
DD891	895-45-62	Mfg. 25 Hatch dogs	8/21/62	▨	▨	▨								
DD762	898-47-62	Mfg. 5 Cog gears	8/22/62											Pattern exp. 9/3/62
DD367	901-12-62	Mfg. 1 Pump impeller	8/22/62											Pattern exp. 9/5/62

J. J. WILLIAMS MLC USN

18.3

Figure 13-5.—Job order progress report.

Digitized by Google

CHAPTER 14

THE PLANNED MAINTENANCE SYSTEM

A Planned Maintenance System is now (1963) being installed throughout the operating fleet. Initially installed in the engineering departments of selected ships, the system will be installed within the next few years in all departments of all active ships.

When the Planned Maintenance System is installed in your ship, you will find a good many changes in the requirements for recording and reporting maintenance work. You may also find changes in the actual maintenance work required. The Planned Maintenance System is based on careful and critical examination of maintenance requirements and of actual maintenance procedures carried out aboard ship.

The Bureau of Ships Technical Manual, manufacturers' technical manuals, and applicable drawings are used in establishing the minimum preventive maintenance requirements for each component. If the original preventive maintenance requirements are found to be unrealistic or unclear, they are modified or completely revised before being incorporated in the Planned Maintenance System.

It is probable that a data collection system will be tied in with the Planned Maintenance System and will be used to correct and standardize the maintenance requirements when necessary. The data collection system will serve as the basis for various records and reports and will also provide feedback on the effectiveness of the Planned Maintenance System.

The overall object of the Planned Maintenance System is to standardize maintenance requirements on a fleetwide basis. Once the Planned Maintenance System is installed and working on your ship, you will probably find that most maintenance requirements are simplified as well as standardized.

The information given in this chapter is merely an introduction to the Planned Maintenance System, with particular reference to the way it works in the engineering department aboard ship. Since the Planned Maintenance System will undoubtedly have far-reaching effects on all shipboard maintenance, you should make every effort to keep up with new developments in the program. A basic source of information is OPNAV INSTRUCTION 4700.16A of 1 August 1963 (and, of course, any later supplements or revisions that may be issued). Other possible sources of information on the Planned Maintenance System include the Bureau of Ships Journal (published monthly) and directives issued by the type commander.

MANUALS, SCHEDULES, AND CARDS

As installed aboard ship, the Planned Maintenance System consists of Planned Maintenance System Manuals, Cycle Schedules, Long Range or Quarterly Schedules, Weekly Schedules, and Maintenance Requirement Cards.

The PLANNED MAINTENANCE SYSTEM MANUAL contains the minimum preventive maintenance requirements for each component installed for the particular department. A separate Planned Maintenance System Manual is furnished for each department. The manuals are individually compiled for each ship, thereby assuring a tailored system.

The Planned Maintenance System Manual for the engineering department is normally kept in the log room. The manual is used primarily by the engineer officer in planning and scheduling maintenance. The manual contains an index for each maintenance group within the department—engineroom, fireroom, electrical, and auxiliary. The manual also contains a page for each component or equipment involved. A short description is given of all maintenance requirements for the component. The frequency with which the maintenance actions will occur is also shown in the manual. A sample page from an engineering department Planned Maintenance Manual is shown in figure 14-1.

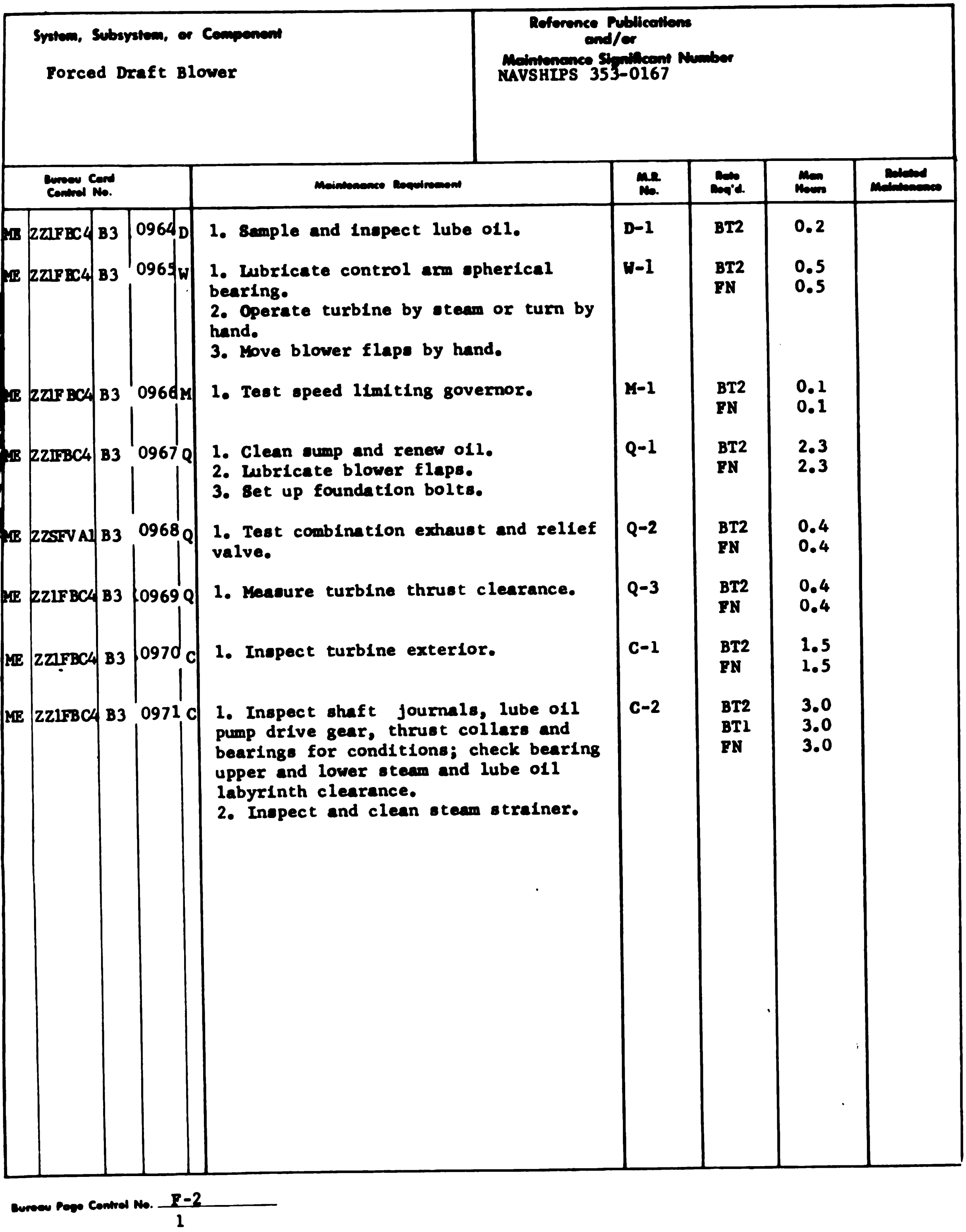

System, Subsystem, or Component	Reference Publications and/or Maintenance Significant Number
Forced Draft Blower	NAVSHIPS 353-0167

Bureau Card Control No.					Maintenance Requirement	M.R. No.	Rate Req'd.	Man Hours	Related Maintenance
ME	ZZ1FBC4	B3	0964	D	1. Sample and inspect lube oil.	D-1	BT2	0.2	
ME	ZZ1FBC4	B3	0965	W	1. Lubricate control arm spherical bearing. 2. Operate turbine by steam or turn by hand. 3. Move blower flaps by hand.	W-1	BT2 FN	0.5 0.5	
ME	ZZ1FBC4	B3	0966	M	1. Test speed limiting governor.	M-1	BT2 FN	0.1 0.1	
ME	ZZ1FBC4	B3	0967	Q	1. Clean sump and renew oil. 2. Lubricate blower flaps. 3. Set up foundation bolts.	Q-1	BT2 FN	2.3 2.3	
ME	ZZSFVA1	B3	0968	Q	1. Test combination exhaust and relief valve.	Q-2	BT2 FN	0.4 0.4	
ME	ZZ1FBC4	B3	0969	Q	1. Measure turbine thrust clearance.	Q-3	BT2 FN	0.4 0.4	
ME	ZZ1FBC4	B3	0970	C	1. Inspect turbine exterior.	C-1	BT2 FN	1.5 1.5	
ME	ZZ1FBC4	B3	0971	C	1. Inspect shaft journals, lube oil pump drive gear, thrust collars and bearings for conditions; check bearing upper and lower steam and lube oil labyrinth clearance. 2. Inspect and clean steam strainer.	C-2	BT2 BT1 FN	3.0 3.0 3.0	

Bureau Page Control No. F-2
1

98.171

Figure 14-1. —Sample page from Planned Maintenance System Manual.

The **CYCLE SCHEDULE**, shown in figure 14-2, is a visual display of preventive maintenance requirements based on an overhaul cycle. All the maintenance items listed in the Cycle Schedule are within the capabilities of ship's force and onboard equipment. The Cycle Schedule contains a list of the components for each maintenance group and schedules the semi-annual, annual, and overhaul cycle maintenance requirements according to "quarters after overhaul." The Cycle Schedule also lists the quarterly and monthly requirements that must be scheduled every quarter. The engineer officer uses the Cycle Schedule in making out the Long Range or Quarterly Schedule.

The **LONG RANGE OR QUARTERLY SCHEDULE** is a visual display consisting of two identical quarterly schedule forms, one for the current quarter (fig. 14-3) and one for the subsequent quarter (fig. 14-4). The Cycle Schedule and both quarterly schedule forms are contained in the same visual display holder, which is known as the Maintenance Control Board. The Maintenance Control Board is usually located outside the log room.

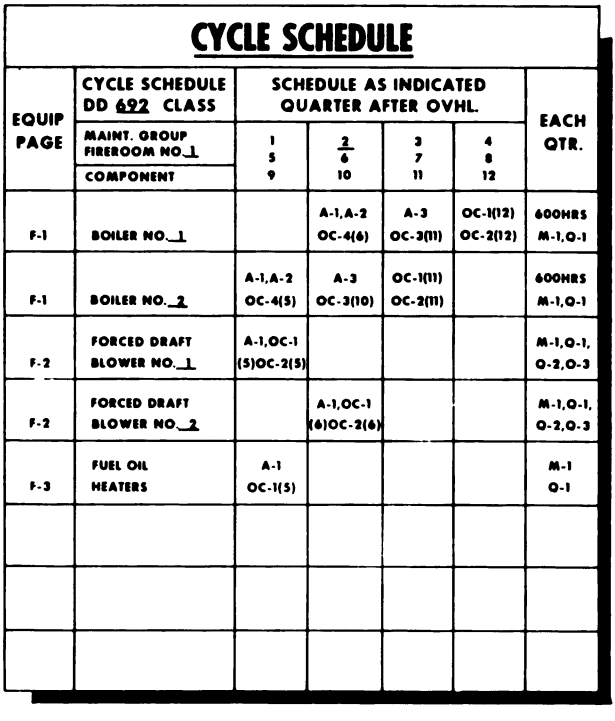

CYCLE SCHEDULE

EQUIP PAGE	CYCLE SCHEDULE DD 692 CLASS	SCHEDULE AS INDICATED QUARTER AFTER OVHL.				EACH QTR.
	MAINT. GROUP FIREROOM NO. 1	1 5 9	2 6 10	3 7 11	4 8 12	
	COMPONENT					
F-1	BOILER NO. 1		A-1, A-2 OC-4(6)	A-3 OC-3(11)	OC-1(12) OC-2(12)	600HRS M-1, O-1
F-1	BOILER NO. 2	A-1, A-2 OC-4(5)	A-3 OC-3(10)	OC-1(11) OC-2(11)		600HRS M-1, O-1
F-2	FORCED DRAFT BLOWER NO. 1	A-1, OC-1 (5) OC-2(5)				M-1, O-1, O-2, O-3
F-2	FORCED DRAFT BLOWER NO. 2		A-1, OC-1 (6) OC-2(6)			M-1, O-1, O-2, O-3
F-3	FUEL OIL HEATERS	A-1 OC-1(5)				M-1 O-1

98.172

Figure 14-2.—Cycle Schedule.

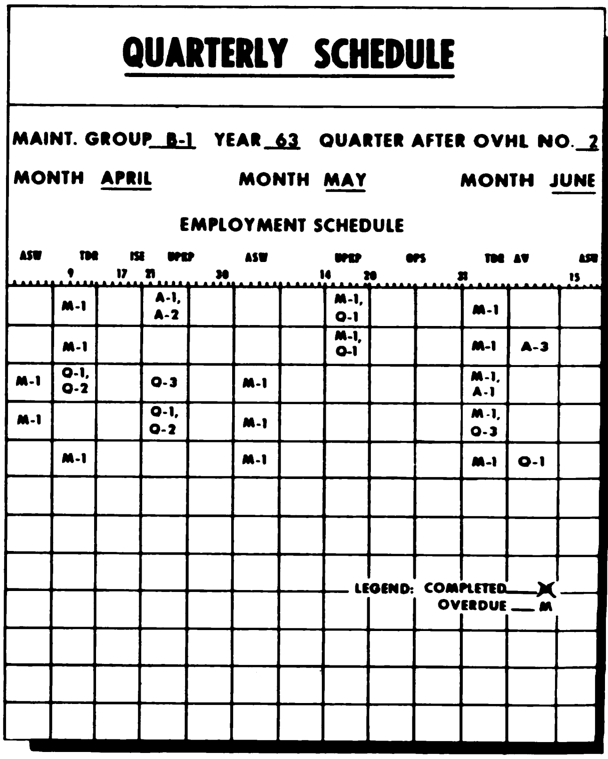

QUARTERLY SCHEDULE

MAINT. GROUP B-1 YEAR 63 QUARTER AFTER OVHL NO. 2

MONTH APRIL MONTH MAY MONTH JUNE

EMPLOYMENT SCHEDULE

ASW TDR ISE UPKP ASW UPKP OPS TDR AV ASW

9 17 21 30 14 20 31 15

	M-1		A-1, A-2				M-1, O-1			M-1		
	M-1						M-1, O-1			M-1	A-3	
M-1	O-1, O-2		O-3		M-1					M-1, A-1		
M-1			O-1, O-2		M-1					M-1, O-3		
	M-1				M-1					M-1	O-1	

LEGEND: COMPLETED — X
OVERDUE — M

98.173

Figure 14-3.—Current quarterly schedule.

The **WEEKLY SCHEDULE**, shown in figure 14-5, is another visual display. This schedule is posted in the working area of the appropriate maintenance group. For example, the Weekly Schedule shown in figure 14-5 is posted in the No. 1 fireroom, since it applies to maintenance of equipment in that area.

The Weekly Schedule assigns specific personnel, by name, to perform specific maintenance tasks on specific components on a specific date. The Weekly Schedule lists the components which are the responsibility of the particular maintenance group. The Weekly Schedule is used by the working area supervisor to assign work and to record the completion of work.

The **MAINTENANCE REQUIREMENT CARD** (fig. 14-6) is a card 5 by 8 inches in size on which the preventive maintenance task is defined in sufficient detail so that assigned personnel can perform the task without difficulty. Each Maintenance Requirement Card lists the rate specified for the performance of that particular task; the safety precautions that must be observed; the time, tools, parts, and materials

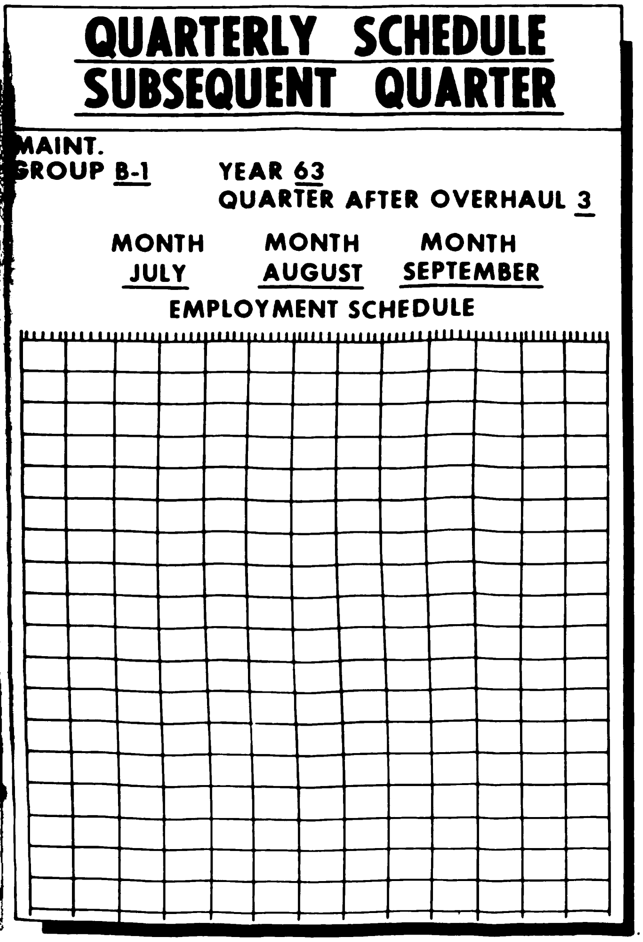

QUARTERLY SCHEDULE
SUBSEQUENT QUARTER

AINT.
ROUP B-1 YEAR 63
QUARTER AFTER OVERHAUL 3

MONTH	MONTH	MONTH
JULY	AUGUST	SEPTEMBER

EMPLOYMENT SCHEDULE

98.174

Figure 14-4. — Subsequent quarterly schedule.

required for the task; and the detailed procedures for performing the task. A container to hold a complete set of applicable Maintenance Requirement Cards, together with applicable portions of the Planned Maintenance Systems Manual, is installed in each maintenance group working area so that all required documents will be readily available to personnel who must perform the maintenance tasks.

A master deck of all Maintenance Requirement Cards for the engineering department is kept on file in the engineering department office. If a card is lost, or if it becomes torn or soiled, it can easily be replaced by typing a duplicate card from the master deck.

HOW THE SYSTEM WORKS

The operation of the Planned Maintenance System can best be understood by looking at a typical maintenance action. The number 1 forced draft blower located in the number 1 fireroom is used as an example.

The engineer officer establishes the quarterly maintenance schedule for the number 1 forced draft blower by reviewing the Cycle Schedule for this piece of equipment. The schedule being established is for the second quarter after overhaul--April, May, and June. Under the column indicating equipment page on the Cycle Schedule (fig. 14-2) the engineer officer notes that forced draft blower no. 1 requires no annual or overhaul cycle maintenance action for the second quarter after overhaul. Under the "each quarter" column, however, he notes that a monthly (M-1) and three quarterlies (Q-1, Q-2, and Q-3) must be scheduled.

In the quarterly schedule for the second quarter after overhaul (fig. 14-3), the engineer officer schedules the monthly maintenance requirement for the first week of April, the first week of May, and the first week of June. He schedules two of the quarterly maintenance requirements (Q-1 and Q-2) for the second week of April, and the third one (Q-3) for the fourth week of April. An annual (A-1) maintenance requirement was also scheduled for the first week in June, although not required for the second quarter after overhaul on the Cycle Schedule. As may be seen from figure 14-2, the A-1 requirement was originally scheduled for the first quarter after overhaul; since it was not accomplished during the first quarter, it must now be rescheduled for the second quarter after overhaul.

In scheduling the various maintenance actions, the engineer officer consults the appropriate pages of the Planned Maintenance System Manual (fig. 14-1). He determines whether or not each maintenance action can be accomplished while the ship is underway or while the machinery is operating, and schedules the maintenance actions accordingly. The quarterly schedule for the second quarter after overhaul is completed and returned to its slot in the Maintenance Control Board located just outside the log room.

The petty officer in charge of fireroom number 1 reviews the quarterly schedule established by the engineer officer, prior to preparing his own Weekly Schedule for the fourth week of April. The petty officer notes that only a quarterly maintenance (Q-3) is scheduled for accomplishment. However, he must also reschedule two quarterly maintenance actions (Q-1 and Q-2) which were originally scheduled for the second week of April but not accomplished then. From

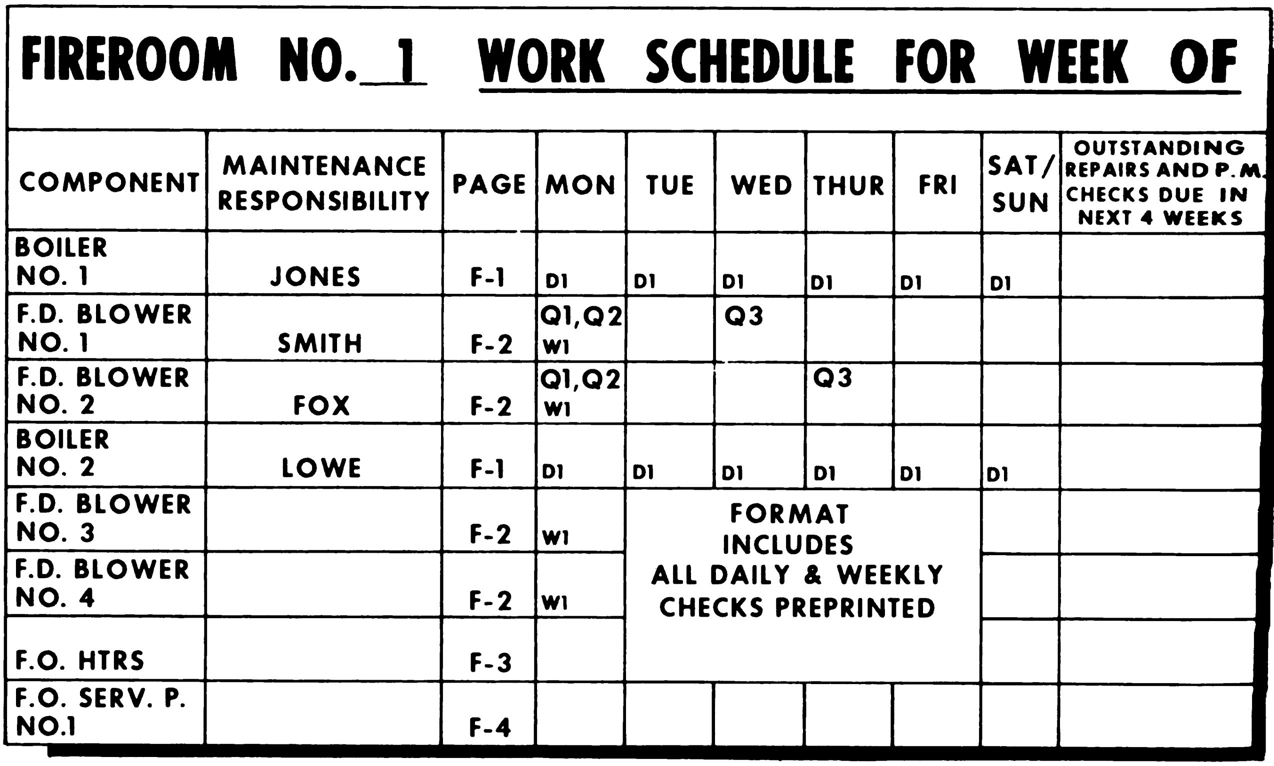

FIREROOM NO. 1 WORK SCHEDULE FOR WEEK OF

COMPONENT	MAINTENANCE RESPONSIBILITY	PAGE	MON	TUE	WED	THUR	FRI	SAT/ SUN	OUTSTANDING REPAIRS AND P.M. CHECKS DUE IN NEXT 4 WEEKS
BOILER NO. 1	JONES	F-1	D1	D1	D1	D1	D1	D1	
F.D. BLOWER NO. 1	SMITH	F-2	Q1,Q2 W1		Q3				
F.D. BLOWER NO. 2	FOX	F-2	Q1,Q2 W1			Q3			
BOILER NO. 2	LOWE	F-1	D1	D1	D1	D1	D1	D1	
F.D. BLOWER NO. 3		F-2	W1	FORMAT INCLUDES ALL DAILY & WEEKLY CHECKS PREPRINTED					
F.D. BLOWER NO. 4		F-2	W1						
F.O. HTRS		F-3							
F.O. SERV. P. NO.1		F-4							

98.175

Figure 14-5. —Weekly Schedule.

the Planned Maintenance System Manual, he finds that a BT2 is required to perform the quarterly maintenance action Q-3. Accordingly, he assigns Smith, a BT2, to perform Q-3 on Wednesday. The Q-1 and Q-2 actions are scheduled for Monday. Note that all daily and weekly maintenance actions on the Weekly Schedule are preprinted on the form. The daily maintenance actions are inflexible; they must be performed each day. The weekly maintenance actions can be rescheduled for any day of the week.

On Wednesday of the fourth week of April, Smith, BT2, checks the Weekly Schedule and finds that he has a Q-3 to perform. He goes to the card holder in his work area and pulls out the appropriate card, which in this case is identified as F2, Q-3. He looks at the card and finds that he needs a certain type of wrench, a screwdriver, a dial indicator, and a 50-foot extension light. Smith obtains this equipment and proceeds to perform the work described on the card, measuring the turbine thrust clearance in accordance with the procedure described on the card. When Smith has completed the job, he reports to the petty officer in charge of the work area, who crosses (X's) out the Q-3 on the Weekly Schedule to indicate that the maintenance action has been completed. If for any reason the Q-3 action could not be performed on the assigned day, the petty officer in charge of the work area would circle the item to indicate that Q-3 was not accomplished and that it must therefore be rescheduled. At the end of each week, the petty officer in charge of the work area brings the quarterly schedule up to date to reflect the items accomplished and the items to be rescheduled.

EFFECTS OF THE SYSTEM

When the Planned Maintenance System is fully operational, how will it affect maintenance procedures and requirements aboard ship? One way to answer this question is to discuss some of the questions that are most commonly asked about the program.

Will the Planned Maintenance System increase the present maintenance workload aboard

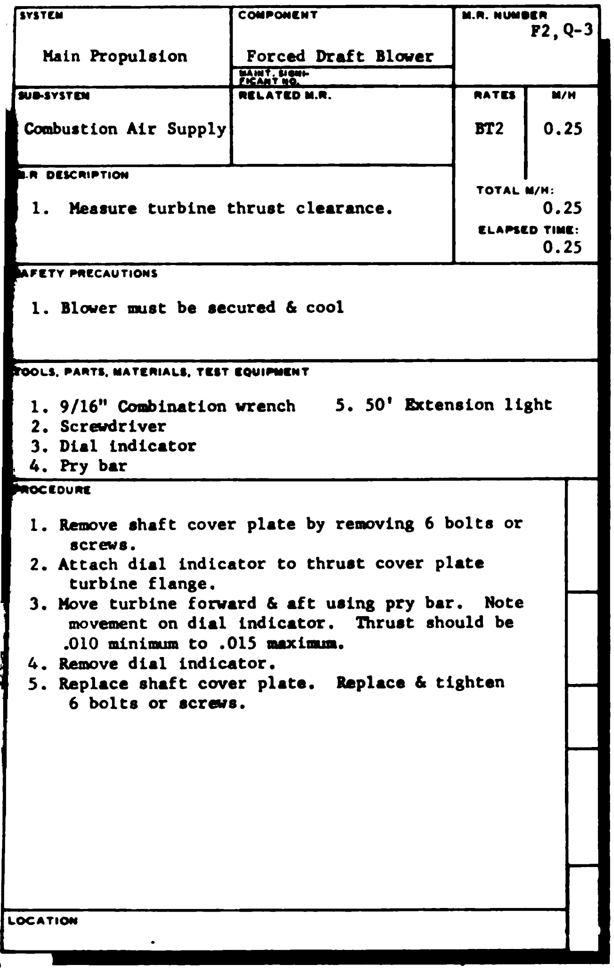

SYSTEM: Main Propulsion
COMPONENT: Forced Draft Blower
M.R. NUMBER: F2, Q-3
MAINT. SIGNIFICANT NO.:
SUB-SYSTEM: Combustion Air Supply
RELATED M.R.:
RATES: BT2
M/H: 0.25
.R DESCRIPTION

1. Measure turbine thrust clearance.

TOTAL M/H: 0.25
ELAPSED TIME: 0.25

AFETY PRECAUTIONS

1. Blower must be secured & cool

OOLS, PARTS, MATERIALS, TEST EQUIPMENT

1. 9/16" Combination wrench
2. Screwdriver
3. Dial indicator
4. Pry bar
5. 50' Extension light

ROCEDURE

1. Remove shaft cover plate by removing 6 bolts or screws.
2. Attach dial indicator to thrust cover plate turbine flange.
3. Move turbine forward & aft using pry bar. Note movement on dial indicator. Thrust should be .010 minimum to .015 maximum.
4. Remove dial indicator.
5. Replace shaft cover plate. Replace & tighten 6 bolts or screws.

LOCATION

98.176

igure 14-6. — Maintenance Requirement Card.

ship? If all maintenance requirements now prescribed in all technical publications and direcives are now being accomplished, the Planned Maintenance System will definitely reduce the naintenance workload. If all maintenance requirements are NOT now being accomplished, he Planned Maintenance System may tempoarily increase the maintenance workload. In a hort time, however, the workload will be dereased as ship's force becomes familiar with he system.

How does the Planned Maintenance System educe the maintenance workload? The Planned Maintenance System is based on careful studies of actual procedures carried out aboard ship. Jnrealistic or excessive maintenance requirenents are being eliminated under the Planned Maintenance System. Also, time is saved because all the information required to perform the maintenance tasks is incorporated in the Maintenance Requirement Cards; consequently, it is no longer necessary to waste time looking up the requirements in a variety of sources, running back to get a tool or piece of equipment that was overlooked, estimating materials and parts required, or having too many or too few men on the job.

What is the relationship between the Maintenance Requirement Cards and the Bureau of Ships Technical Manual? The Maintenance Requirement Cards take precedence over the Bureau of Ships Technical Manual. If you find differences between the cards and the Manual, go by the cards. All Maintenance Requirement Cards for BuShips equipment are reviewed for technical content and completeness by the Bureau of Ships. When differences exist between the cards (as finally approved) and the Bureau of Ships Technical Manual, the Manual will be revised to conform to the cards.

Can the Planned Maintenance System prevent failures and casualties? Not entirely. But the careful accomplishment of all required maintenance actions according to the requirements of the program can definitely prolong the service life of machinery and equipment.

Is the Planned Maintenance System foolproof? Of course not. The system is neither self-starting nor self-implementing. Like most other systems, this one is only as good as the people who use it. But the system is simple, logical, and easy to follow, once it is set up.

Will the changeover to the Planned Maintenance System be entirely painless? Probably not. Installing any new system is quite a job, and this is particularly true in the case of a system as large and as comprehensive as the Planned Maintenance System. Everybody aboard ship, from the commanding officer on down, will have to learn how the system works and what new responsibilities it involves. The system will be installed aboard each ship by a trained installation team, and shipboard personnel will be thoroughly indoctrinated in the functioning of the system.

In summary, we might look at some of the advantages that may reasonably be expected from the system when it is installed and fully operational:

STANDARDIZATION of preventive maintenance procedures and reports.

SIMPLIFICATION of preventive maintenance requirements.

ONE CENTRAL SOURCE OF INFORMATION on the minimum preventive maintenance required for each piece of machinery and equipment.

INCREASED RELIABILITY of machinery and equipment because of improved preventive maintenance.

INCREASED ECONOMY through the prevention of those failures and casualties which can be avoided or postponed by a proper program of preventive maintenance.

EASIER AND MORE REALISTIC PLANNING for preventive maintenance. The Planned Maintenance System takes full account of the ship's operational requirements, the scheduling of overhauls and upkeep periods, the availability of personnel, and the time required for each item of preventive maintenance. Thus scheduling is simplified at every level.

A NEW TOOL FOR TRAINING PERSONNEL at all levels. This aspect of the Planned Maintenance System may assume increasing importance as the system develops.

INCREASED OPERATIONAL READINESS OF SHIPS—and this, of course, is the prime purpose of the entire program.

APPENDIX I

TRAINING FILM LIST

Training films that are related to the information presented in this training course are listed below. Under each chapter number and title, the training films are identified by Navy number and title and are briefly described. Other training films that may be of interest are listed in the United States Navy Film Catalog, NavPers 10000 (revised).

Chapter 1

PREPARING FOR ADVANCEMENT

MN-6798E	Your Job In The Navy–Part 5. (27 min.–Color–Sound–Unclassified–1950.) Gives brief description of type of work covered by the following ratings: Metalsmith, Damage Controlman, Patternmaker, Molder, Aviation Machinist's Mate, Aviation Electronicsman, and Aviation Ordnanceman.

Chapter 2

FOUNDING

MN-6798E	Your Job In The Navy–Part 5. (27 min.–Color–Sound–Unclassified–1950.) Gives brief description of type of work covered by following ratings: Metalsmith, Damage Controlman, Patternmaker, Molder, Aviation Machinist's Mate, Aviation Electronicsman, and Aviation Ordnanceman.
ME-7311A	Molding With a Loose Pattern (Bench). (21 min.--B&W–Sound–Unclassified–1944.) USOE OE-423. Shows how to identify and use common bench molder's tools; how molding sand is prepared; how to face a pattern; ram and vent a mold; roll a drag; cut a sprue, runner, gates, and riser; swab, rap, and draw a pattern and, by animation, what takes place inside a mold during pouring. (Accompanied by filmstrip SE-7311K.)
ME-7311B	Making a Simple Core. (15 min.–B&W–Sound–Unclassified–1944.) USOE OE-424. Shows how to prepare a suitable sand for coremaking; how to make a small cylindrical core in either one or two pieces; assemble a two-piece core; and how core gases escape when a mold is poured. (Accompanied by filmstrip SE-7311L.)

ME-7311C Molding Part Having a Vertical Core. (19 min.–B&W–Sound–Unclassified–1944.) USOE OE-425. Shows how to mold the drag and cope halves; mold a gate and riser instead of cutting them; how to vent a mold so as to permit the escape of core gases; and how to locate a vertical core in a mold. (Accompanied by filmstrip SE-7311M.)

ME-7311D Molding With a Split Pattern. (19 min.–B&W–Sound–Unclassified–1944.) USOE OE-426. Shows why split patterns are used; how ramming affects the permeability of sand in a mold; how to mold the drag and cope; how to reinforce a mold with nails; and how to patch a mold. (Accompanied by filmstrip SE-7311N.)

ME-7311E Molding With a Gated Pattern. (11 min.–B&W–Sound–Unclassified–1944.) USOE OE-427. Shows what a gated pattern is and why it is used; how a match or follow board may simplify making a parting; how facing sand is prepared and used; and how and why some patterns are rapped. (Accompanied by filmstrip SE-7311O.)

ME-7311F Molding With a Loose Pattern (Floor). (24 min.–B&W–Sound–Unclassified–1945.) USOE OE-428. Shows distinction between bench molding and floor molding; how to face a deep pattern; ram a drag and walk it off; clamp a mold; locate sprues, risers, using spotters; and how to tuck the cross bars of a large cope. (Accompanied by filmstrip SE-7311P.)

ME-7311G Molding With a Deep Green Sand Core. (24 min.–B&W–Sound–Unclassified–1945.) USOE OE-429. Shows why to use a follow board with a thin, box-like pattern; how to locate sprue and watch-up pins; use gaggers, and how to ram and vent a green sand core. (Accompanied by filmstrip SE-7311Q.)

ME-7311H Molding a Valve Body. (26 min.–B&W–Sound–Unclassified–1945.) USOE OE-430. Shows use of a split pattern and multi-part dry sand core; how to locate a core and seal the core prints. (Accompanied by filmstrip SE-7311R.)

ME-7311I Molding a Horizontal Cored Part. (22 min.—B&W—Sound—Unclassified–1945.) USOE OE-431. Shows use of horizontal core; use of split patterns; use of chaplets and chaplet supports; how to gate a mold for rapid pouring of thin casting; and how to clean a casting. (Accompanied by filmstrip SE-7311S.)

ME-7311J Charging and Operating a Cupola. (14 min.–B&W–Sound–Unclassified–1945.) USOE OE-437. Identifies and explains purpose of essential parts of the cupola; outlines important steps and precautions to be followed in firing, charging, and operating cupola; and explains cycle of operations involved in melting process. (Accompanied by filmstrip SE-7311T.)

Chapter 3

MOLDER'S TOOLS

ME-7311A	Molding With a Loose Pattern (Bench). (21 min.–B&W–Sound–Unclassified–1944.) USOE OE-423. Shows how to identify and use common bench molder's tools; how molding sand is prepared; how to face a pattern; ram and vent a mold; roll a drag; cut a sprue, runner, gates, and riser; swab, rap, and draw a pattern and, by animation, what takes place inside a mold during pouring. (Accompanied by filmstrip SE-7311K.)
ME-7311C	Molding Part Having a Vertical Core. (19 min.–B&W–Sound–Unclassified–1944.) USOE OE-425. Shows how to mold the drag and cope halves; mold a gate and riser instead of cutting them; how to vent a mold so as to permit the escape of core gases; and how to locate a vertical core in a mold. (Accompanied by filmstrip SE-7311M.)
ME-7311D	Molding With a Split Pattern. (19 min.–B&W–Sound–Unclassified–1944.) USOE OE-426. Shows why split patterns are used; how ramming affects the permeability of sand in a mold; how to mold the drag and cope; how to reinforce a mold with nails; and how to patch a mold. (Accompanied by filmstrip SE-7311N.)
ME-7311E	Molding With a Gated Pattern. (11 min.–B&W–Sound–Unclassified–1944.) USOE OE-427. Shows what a gated pattern is and why it is used; how a match or follow board may simplify making a parting; how facing sand is prepared and used; and how and why some patterns are rapped. (Accompanied by filmstrip SE-7311O.)
ME-7311F	Molding With a Loose Pattern (Floor). (24 min.–B&W–Sound–Unclassified–1945.) USOE OE-428. Shows distinction between bench molding and floor molding; how to face a deep pattern; ram a drag and walk it off; clamp a mold; locate sprues risers, using spotters; and how to tuck the cross bars of a large cope. (Accompanied by filmstrip SE-7311P.)
ME-7311G	Molding With a Deep Green Sand Core. (24 min.–B&W–Sound–Unclassified–1945.) USOE OE-429. Shows why to use a follow board with a thin, box-like pattern; how to locate sprue and watch-up pins; use gaggers, and how to ram and vent a green sand core. (Accompanied by filmstrip SE-7311Q.)
ME-7311H	Molding a Valve Body. (26 min.–B&W–Sound–Unclassified–1945.) USOE OE-430. Shows use of a split pattern and multipart dry sand core; how to locate a core and seal the core prints. (Accompanied by filmstrip SE-7311R.)

Chapter 4

SHOP EQUIPMENT

MC-4597	For Safety's Sake. (13 min.–B&W–Sound–Unclassified–1945.) Explains necessary precautions in handling portable power tools with emphasis on drills, grinders, and electric saws. Stresses importance of wearing goggles, keeping equipment in good condition, and grinding equipment. Uses actual accidents to demonstrate results of carelessness.
ME-7311A	Molding With a Loose Pattern (Bench). (21 min.–B&W–Sound–Unclassified–1944.) USOE OE-423. Shows how to identify and use common bench molder's tools; how molding sand is prepared; how to face a pattern; ram and vent a mold; roll a drag; cut a sprue, runner, gates and riser; swab, rap, and draw a pattern and, by animation, what takes place inside a mold during pouring. (Accompanied by filmstrip SE-7311K.)
ME-7311B	Making a Simple Core. (15 min.–B&W–Sound–Unclassified–1944.) USOE OE-424. Shows how to prepare a suitable sand for coremaking; how to make a small cylindrical core in either one or two pieces; assemble a two-piece core; and how core gases escape when a mold is poured. (Accompanied by filmstrip SE-7311L.)
ME-7311E	Molding With a Gated Pattern. (11 min.–B&W–Sound–Unclassified–1944.) USOE OE-427. Shows what a gated pattern is and why it is used; how a match or follow board may simplify making a parting; how facing sand is prepared and used; and how and why some patterns are rapped. (Accompanied by filmstrip SE-7311O.)
ME-7311F	Molding With a Loose Pattern (Floor). (24 min.–B&W–Sound–Unclassified–1945.) USOE OE-428. Shows distinction between bench molding and floor molding; how to face a deep pattern; ram a drag and walk it off; clamp a mold; locate sprues, risers, using spotters; and how to tuck the crossbars of a large cope. (Accompanied by filmstrip SE-7311P.)
ME-7311I	Molding a Horizontal Cored Part. (22 min.–B&W–Sound–Unclassified–1945.) USOE OE-431. Shows use of horizontal core; use of split pattern; use of chaplets and chaplet supports; how to gate a mold for rapid pouring of thin casting; and how to clean a casting. (Accompanied by filmstrip SE-7311S.)

Chapter 6

MOLD MATERIALS

ME-7311A	Molding With a Loose Pattern (Bench). (21 min.–B&W–Sound–Unclassified–1944.) USOE OE-423. Shows how to identify and use common bench molder's tools; how mold sand is prepared; how to face a pattern; ram and vent a mold; roll a drag; cut a sprue, runner, gates and riser; swab, rap, and draw a pattern and, by animation, what takes place inside a mold during pouring. (Accompanied by filmstrip SE-7311K.)
ME-7311B	Making a Simple Core. (15 min.—B&W–Sound—Unclassified–1944.) USOE OE-424. Shows how to prepare a suitable sand for coremaking; how to make a small cylindrical core in either one or two pieces; assemble a two-piece core; and how core gases escape when a mold is poured. (Accompanied by filmstrip SE-7311L.)
ME-7311C	Molding Part Having a Vertical Core. (19 min.–B&W–Sound–Unclassified–1944.) USOE OE-425. Shows how to mold the drag and cope halves; mold a gate and riser instead of cutting them; how to vent a mold so as to permit the escape of core gases; and how to locate a vertical core in a mold. (Accompanied by filmstrip SE-7311M.)
ME-7311D	Molding With a Split Pattern. (19 min.–B&W–Sound–Unclassified–1944.) USOE OE-426. Shows why split patterns are used; how ramming affects the permeability of sand in a mold; how to mold the drag and cope; how to reinforce a mold with nails; and how to patch a mold. (Accompanied by filmstrip SE-7311N.)
ME-7311E	Molding With a Gated Pattern. (11 min.–B&W–Sound–Unclassified–1944.) USOE OE-427. Shows what a gated pattern is and why it is used; how a match or follow board may simplify making a parting; how facing sand is prepared and used; and how and why some patterns are rapped. (Accompanied by filmstrip SE-7311O.)
ME-7311G	Molding With a Deep Green Sand Core. (24 min.–B&W–Sound–Unclassified–1945.) USOE OE-429. Shows why to use a follow board with a thin, box-like pattern; how to locate sprue and watch-up pins; use gaggers, and how to ram and vent a green sand core. (Accompanied by filmstrip SE-7311Q.)

Chapter 7

MOLDS AND MOLD CONSTRUCTION

ME-7311A	Molding With a Loose Pattern (Bench). (21 min.–B&W–Sound–Unclassified–1944.) USOE OE-423. Shows how to identify and use common bench molder's tools; how molding sand is prepared; how to face a pattern; ram and vent a mold; roll a drag; cut a sprue, runner, gates and riser; swab, rap, and draw a pattern and, by animation, what takes place inside a mold during pouring. (Accompanied by filmstrip SE-7311K.)
ME-7311C	Molding Part Having a Vertical Core. (19 min.–B&W–Sound–Unclassified–1944.) USOE OE-425. Shows how to mold the drag and cope halves; mold a gate and riser instead of cutting them; how to vent a mold so as to permit the escape of core gases; and how to locate a vertical core in a mold. (Accompanied by filmstrip SE-7311M.)
ME-7311D	Molding With a Split Pattern. (19 min.–B&W–Sound–Unclassified–1944.) USOE OE-426. Shows why split patterns are used; how ramming affects the permeability of sand in a mold; how to mold the drag and cope; how to reinforce a mold with nails; and how to patch a mold. (Accompanied by filmstrip SE-7311N.)
ME-7311E	Molding With a Gated Pattern. (11 min.–B&W–Sound–Unclassified–1944.) USOE OE-427. Shows what a gated pattern is and why it is used; how a match or follow board may simplify making a parting; how facing sand is prepared and used; and how and why some patterns are rapped. (Accompanied by filmstrip SE-7311O.)
ME-7311F	Molding With a Loose Pattern (Floor). (24 min.–B&W–Sound–Unclassified–1945.) USOE OE-428. Shows distinction between bench molding and floor molding; how to face a deep pattern; ram a drag and walk it off; clamp a mold; locate sprues, risers, using spotters; and how to tuck the crossbars of a large cope. (Accompanied by filmstrip SE-7311P.)
ME-7311G	Molding With a Deep Green Sand Core. (24 min.–B&W–Sound–Unclassified–1945.) USOE OE-429. Shows why to use a follow board with a thin, box-like pattern; how to locate sprue and watch-up pins; use gaggers, and how to ram and vent a green sand core. (Accompanied by filmstrip SE-7311Q.)

Chapter 8

CORES

ME-7311B	Making a Simple Core. (15 min.–B&W–Sound–Unclassified–1944.) USOE OE-424. Shows how to prepare a suitable sand for coremaking; how to make a small cylindrical core in either one or two pieces; assemble a two-piece core; and how core gases escape when a mold is poured. (Accompanied by filmstrip SE-7311L.)
ME-7311C	Molding Part Having a Vertical Core. (19 min.–B&W–Sound–Unclassified–1944.) USOE OE-425. Shows how to mold the drag and cope halves; mold a gate and riser instead of cutting them; how to vent a mold so as to permit the escape of core gases; and how to locate a vertical core in a mold. (Accompanied by filmstrip SE-7311M.)
ME-7311D	Molding With a Split Pattern. (19 min.—B&W—Sound—Unclassified—1944.) USOE OE-426. Shows why split patterns are used; how ramming affects the permeability of sand in a mold; how to mold the drag and cope; how to reinforce a mold with nails; and how to patch a mold. (Accompanied by filmstrip SE-7311N.)
ME-7311G	Molding With a Deep Green Sand Core. (24 min.–B&W–Sound–Unclassified–1945.) USOE OE-429. Shows why to use a follow board with a thin, box-like pattern; how to locate sprue and watch-up pins; use gaggers, and how to ram and vent a green sand core. (Accompanied by filmstrip SE-7311Q.)
ME-7311H	Molding a Valve Body. (26 min.–B&W—Sound—Unclassified—1945.) USOE OE-430. Shows use of a split pattern and multipart dry sand core; how to locate a core and seal the core prints. (Accompanied by filmstrip SE-7311R.)
ME-7311I	Molding a Horizontal Cored Part. (22 min.–B&W–Sound–Unclassified–1945.) USOE OE-431. Shows use of horizontal core; use of split pattern; use of chaplets and chaplet supports; how to gate a mold for rapid pouring of this casting; and how to clean a casting. (Accompanied by filmstrip SE-7311S.)
ME-7312B	Making a Pattern With a Vertical Core. (14 min.–B&W–Sound–Unclassified–1945.) USOE OE-322. Shows importance of making preliminary sketch; how to make layout; assemble pattern; allow for draft; and shellac pattern. (Accompanied by filmstrip SE-7312F.)

ME-7312C Making a Core Box for a Tail Print. (18 min.–B&W–Sound–Unclassified–1945.) USOE OE-350. Shows how to use dry sand cores in molding holes in casting; use pattern layout to make a corebox; distinguish between core and core print; add the core; and determine parting line of a core box. (Accompanied by filmstrip SE-7312G.)

ME-7312D Making a Core Box for a Vertical Core. (19 min.–B&W–Sound–Unclassified–1945.) USOE OE-329. Shows how to make sand cores; function of sand core; how to make a half box; use parted boxes; use layout pattern in making a core box; prepare core box pieces; and assemble core box. (Accompanied by filmstrip SE-7312H.)

Chapter 9

COREMAKING

(See list for chapter 8.)

Chapter 10

METALS AND ALLOYS

SN-2666 Properties of Metals. (58 frames–B&W–Silent–Unclassified–1943.) Compares use of metal in construction of the plane of 1914 to that of 1943. Properties of metals and alloys which are discussed are: strength; elasticity; toughness; ductility; malleability; brittleness; fusibility; and corrosion resistance.

Chapter 11

FACTORS RELATED TO THE CASTING OF METALS

ME-7311A Molding With a Loose Pattern (Bench). (20 min.–B&W–Sound–Unclassified–1944.) USOE OE-423. Shows how to identify and use common bench molder's tools; how molding sand is prepared; how to face a pattern; ram and vent a mold; roll a drag; cut a sprue, runner, gates, and riser: swab, rap, and draw a pattern, and, by animation, what takes place inside a mold during pouring. (Accompanied by filmstrip SE-7311K.)

ME-7311D Molding With a Split Pattern. (19 min.–B&W–Sound–Unclassified–1944.) USOE OE-426. Shows why split patterns are used; how ramming affects the permeability of sand in a mold; how to mold the drag and cope; how to reinforce a mold with nails; and how to patch a mold. (Accompanied by filmstrip SE-7311N.)

ME-7311F	Molding With a Loose Pattern (Floor). (24 min.–B&W–Sound–Unclassified–1945.) USOE OE-428. Shows distinction between bench molding and floor molding; how to face a deep pattern; ram a drag and walk it off; clamp a mold; locate sprues, risers, using spotters; and how to tuck the cross-bars of a large cope. (Accompanied by filmstrip SE-7311P.)
ME-7311G	Molding With a Deep Green Sand Core. (24 min.–B&W–Sound–Unclassified–1945.) USOE OE-429. Shows why to use a follow board with a thin, box-like pattern; how to locate sprue and watch-up pins; use gaggers, and how to ram and vent a green sand core. (Accompanied by filmstrip SE-7311Q.)
ME-7311H	Molding a Valve Body. (26 min.–B&W–Sound–Unclassified–1945.) USOE OE-430. Shows use of a split pattern and multipart dry sand core; how to locate a core and seal the core prints. (Accompanied by filmstrip SE-7311R.)

Chapter 13

REPAIR DEPARTMENT

KN-9958A	Planned Maintenance System: Concept. (24 min.–B&W–Sound–Unclassified–1963.) This film introduces and trains BUSHIPS/BUWEPS and Fleet Personnel (Senior Officers and Civilians) in the new standard maintenance management system which is a "cradle to grave" concept.
KN-9958B	Planned Maintenance System: Application. (13 min.–B&W–Sound–Unclassified–1963.) This film explains how to use the new system in shipboard maintenance situations.
MN-9421A	Make The Most of Your Overhaul–Advance Planning. (20 min.–B&W–Sound–Unclassified–1962.) This film will be used by petty officers, division chiefs, and department heads to review ship overhaul procedures with emphasis on the actions required by the ship for maximum effectiveness from the overhaul. This film may also be of interest to shipyard personnel.
MN-9421B	Make The Most of Your Overhaul–The Overhaul. (17 min.–B&W–Sound–Unclassified–1962.) See description for MN-9421A.

Chapter 14

THE PLANNED MAINTENANCE SYSTEM

KN-9958A	Planned Maintenance System–Concept. (24 min.–B&W–Sound–Unclassified–1963.) This film introduces and trains BUSHIPS/BUWEPS and Fleet Personnel (Senior Officers and Civilians) in the new standard maintenance management system which is a "cradle to grave" concept.
KN-9958B	Planned Maintenance System–Application. (13 min.–B&W–Sound–Unclassified–1963.) This film explains how to use the new system in shipboard maintenance situations.

APPENDIX II

SAFETY IN THE FOUNDRY

The provisions set forth by American Safety Codes are used as guides when setting up safety precautions and safety regulations governing foundry machinery and equipment. The basic safety precepts that apply to all personnel in all types of activities are listed as follows:

1. Report all unsafe conditions, shop machinery, and shop equipment.
2. Observe all safety precautions and safety regulations.
3. Wear protective clothing or equipment as applicable.
4. Report all injuries and impaired health immediately.
5. In the event of an unforeseen hazardous occurrence, each individual is expected to exercise such reasonable caution as is appropriate to the situation.

Safety precautions relating to the operation and maintenance of foundry equipment are available in the instruction manuals furnished by the manufacturers of the specific equipment items.

The Navy policy in regard to safety is to conserve manpower and material to the maximum degree. This requires a comprehensive and continuous safety program; it also calls for the active support of everyone involved, from the highest ranking naval officer to the newest recruit.

Safeguarding against accident must be a part of daily life, as long as machine parts may become defective, or new men may have to be instructed in the processes and operations of an industrial technique. By utilizing the safety hints and information made available to you in the publications listed here, you can do your part toward making the shipboard foundry a safe place for yourself and your fellow workers.

Some of these precautions have already been pointed up in the preceding chapters, but safety is such an important factor that it can do no harm to stress it throughout this training course. The following rules, if learned and observed, will provide at least minimum safety in all the operations involved in melting, tapping, and pouring the mold.

GENERAL SAFETY SUGGESTIONS

The melting, tapping, and pouring of molten metal comprises a potential threat to all personnel in the foundry. In addition to this risk, there are the tripping, slipping, and falling hazards that exist in any shop. The best safeguards that you can adopt are: (1) good housekeeping practices in the work spaces, (2) knowledge of how equipment works, (3) care in handling equipment, and (4) use of safety clothing.

Good housekeeping practice ensures an orderly shop where everything is kept in its proper place. Mold boards, flasks, core plates, weights, and so forth become a hazard when they are insecurely stacked. Tools left lying on the floor can trip a man, especially if he is carrying any object that requires his close attention. Falling tools can damage a mold, as well as injure personnel.

No man should handle foundry equipment (especially electric equipment) until he has some knowledge of how it works. Electrical equipment must be grounded, and the safety guards kept in place; the area around the furnace must be kept dry. The proper sequence for lighting off and securing must be followed. Chipping, grinding, and sandblasting operations produce flying particles which can lead to eye injuries unless proper precautions are taken. A dust-laden atmosphere can lead to respiratory disturbances. Contact between molten metal and moisture can cause spattering of the hot metal. Crane ladles should have an automatic locking device, to be disengaged only when the ladle is being tilted to pour a mold.

If molding sand is improperly tempered, the excess moisture may cause metal blow. Ladles, skimmers, and all equipment used in tapping and pouring must be thoroughly dry, to eliminate the possibility of moisture contact with hot metal. Improperly fitting tongs will not provide a safe grip on a crucible. Keep a record of the number of heats run with a given crucible. Use the face—not the side—of an emery wheel when grinding castings. Tools not in first class condition should be repaired or replaced. Gaggers, core wires, vent wires, and other sharp-pointed or sharp-edged tools must be handled with care.

Wear the safety shoes, close-fitting clothing, gloves, and goggles provided. Use safety glasses with special colored lenses when looking into the furnace to check on the melting progress. Wear special foundry leggings when tapping the furnace. Wear goggles when chipping, grinding, or sandblasting; wear respirators during sandblasting; wear gloves when cleaning castings.

MOLDING AND COREMAKING

1. Safety Shoes.—Molder's safety shoes shall be worn by all foundry personnel.
2. Protection of Hands and Feet.—Keep feet and hands from under flasks and core boxes.
3. Screening Sand.—Sand shall be properly screened (riddled) or magnetically separated to remove foundry nails and other sharp metal.
4. Gagger Rods and Tools.—Molders must work with care in handling gagger rods and core wire. Handtools used for this purpose must be kept in good condition. A box should be provided in which to keep gagger iron, nails, and clamps.
5. Bracing Cores.—Careful bracing of cores is necessary in large molds as heavy cores may topple over.
6. Suspended Molds.—Work must never be done underneath molds that are suspended from cranes. Molds must be placed on tripod supports or substantial horses.
7. Venting Molds.—Molds shall be carefully vented and rammed to prevent explosions.
8. Lighting Oil Burners.—In lighting oil burners and torches, the following rules shall be observed:
   a. Make sure air valve is closed.
   b. Apply lighted torch at fuel inlet.
   c. Open oil valve slightly.
   d. Turn on air.
9. Floors and Aisles.—Foundry personnel must know the importance of keeping the molding floor clean, and must see that adequate gangways and aisle space are provided to permit access to molds by those carrying ladles.
10. Spattering.—Sand shall be spread on concrete pavements around pouring floors to reduce spattering of hot metal in case of a spill.
11. Water on Floor.—Pools of water must not be left on the pouring floor. Molten metal will spatter widely if dropped in water.
12. Cleaning Molds.—Eye protection must be worn when using air in cleaning off molds.

CRUCIBLES

1. Graphite crucibles, consisting of graphite, plumbago, or black lead, shall be used instead of clay, because they withstand higher temperatures and are not so apt to break.
2. Old, worn-out crucibles shall not be ground up for use in manufacturing new crucibles.
3. Extra crucibles that have been used before shall be kept on hand as standbys in case they are needed on short notice.
4. All foundry personnel shall be fully instructed on how to handle crucibles to avoid breakage.
5. New crucibles should be bought in excess of actual requirements and stored to allow them to "season." Marking the date of manufacture will assist in selecting the older ones first.
6. A number shall be assigned to each crucible and a tally kept of the number of heats taken.
7. Upon receipt, new crucibles shall be examined for flaws and cracks, not only visually, but also by tapping with a light hammer.

MOISTURE IN CRUCIBLES

1. New crucibles that have become wet must be stored in a place where they will dry out thoroughly for 4 or 5 weeks before using. The roof of a continuously operated core oven is a good place for the stowage chamber.
2. Crucibles contain less than one-fourth of one percent of moisture when they come from the kilns, but on cooling and afterwards they absorb moisture from the air.
3. Crucibles must not be placed on a layer of damp sand or on a cold floor and left for any length of time for they absorb moisture if the temperature falls materially below 250° F.
4. To anneal a crucible properly, it must be slowly heated to somewhat above 250° F and

allowed to soak at this temperature long enough to remove all moisture. If thoroughly annealed, it may then be placed in service.

5. Consideration should be given to the size of the crucible, as large ones take a longer soaking period to reduce the moisture. In drying out a No. 200 crucible, 10 hours or more should be allowed for bringing it up to 250° F, and fully 10 hours more for soaking.

6. If its dryness is doubtful, a crucible must next be heated for some hours to a dull red heat and allowed to cool again, very slowly, to about 250° F or over, when it goes into the furnace.

PREVENTING CRACKS IN CRUCIBLES

1. Crucibles must not be quickly subjected to high temperature if considerable moisture is present, as the walls may expand and cause ruptures or cracks. The same is true in natural contraction of the drying crucible.

2. Crucibles must be checked for small pinholes and skelping caused by rapid expansion and contraction. These defects are the chief causes of failure at a critical time during pouring or while the crucible is being pulled from the furnace. The crucible may rupture and spill metal on hands or feet.

3. When crucibles are heated with fuel containing too high a percentage of sulfur, or in oil furnaces using too little oil or too much steam, fine cracks (called alligator cracks) often cover the surface of the crucible.

4. Furnace operators must thoroughly understand before using an oil furnace, that an excess of air or steam, or an insufficient supply of oil, may cause an oxidizing action.

5. When crucibles are stored on top of furnaces, furnace operators must be sure the furnace covers fit properly. Carelessness may cause moisture to be given off from the gases when fresh fuel is placed on the fire; the moisture is likely to come in contact with crucibles and cause alligator cracks.

HANDLING CRUCIBLES WITH TONGS

1. Care must be used in handling crucibles with tongs and shanks. Where tilting furnaces are used, as many as 50 heats are possible from a crucible; but if crucibles have to be removed by tongs, they can be used on an average of only 15 heats.

2. Because a crucible is soft and plastic a white heat, it may be squeezed out of shape by the excess pressure of forcing the handles o the tongs together. This will gradually weaken the walls and eventually cause a complete rupture, with serious burns to operators.

3. There are three styles of tongs in general use—one-pronged, two-pronged, and spade tongs. Tongs must fit perfectly from the widest part of the crucible (usually called the bilge or belly) down to within a few inches from the bottom. Tongs should not extend to the extreme bottom, because of the difficulty in placing the crucible in the shank.

4. Proper use of tongs consists of holding the crucible below the bilge and lifting it so that the least possible pressure is exerted on the crucible walls.

5. One-pronged tongs should be used for small crucibles, up to size No. 40. Never use one-pronged tongs for large crucibles ranging from No. 200 to No. 300 because the pressure is exerted only at the bottom, which means a single point of contact.

6. At least two pairs of tongs shall be provided for each size crucible; one pair may become badly bent or worn.

7. Melters must never drive down the ring of the tongs by using a skimmer or other tool. This practice will cause cracks.

8. Never use improperly fitted tongs. It is important to see that tongs fit the crucible to prevent spillage of metals.

9. Never alter two-pronged tongs by cutting off the lower prong even if there is a lack of space in the furnace.

10. A set of cast iron forms shall be used to restore tongs to their proper shape. To restore the tongs to their original shape it is only necessary to put them in the furnace, raise them to a red heat, clamp them to the proper form, and bring them back into shape by means of a heavy hammer.

11. Crucibles and tongs must be kept free of clinkers, coal, or coke, to prevent forcing foreign material into the sides of crucibles when they are grasped by tongs.

12. The bottom surface (outside) of a crucible must be free of any foreign material to prevent uneven distribution of weight and concentration on projecting spots.

METAL IN CRUCIBLES

1. Ingots must not be thrown into the crucibles in haste as this may cause dents in the sides or bottoms that can eventually develop into cracks or fissures.

2. Ingots must not be crammed into crucibles because of the danger due to expansion of the metal while heating, which can cause cracks to form.

3. Care should be taken to see that all molten metal is poured from crucibles because the cooling of the residual mass will create a strain on the crucible.

CLEANING AND FINISHING

1. **Moving Castings.**—Castings must not be moved through the foundry by magnetic crane.

a. **Steel Castings.**—Foundrymen shall be instructed as to the proper method of attaching slings or chains on the heads or risers of steel castings.

b. **Iron Castings.**—Slings or hooks shall not be attached to the heads or risers of iron castings.

2. **Inspections.**—A thorough inspection of casting containers, slings, and hooks shall be made at regular periods.

3. **Crane Signals.**—A standard set of crane signals shall be used to guide the crane operator. Signals shall be given by one man only.

4. **Roughing or Flogging Floor.**—All foundry personnel working on the roughing or flogging floor must wear eye protection and safety shoes. Shields must be placed between the work area and other personnel to stop flying chips.

5. **Sand Removal.**—When removing heads and risers by cold-cutting saws, all sand shall be removed from the casting before placing it on the saw table.

6. **Chipping.**—Chippers shall be sure to use good chisels and hammers, and to wear eye protection. Chipping should not be done in the open; that is, some method of screening should be provided to prevent flying particles from striking personnel in the area.

7. **Cutting and Welding.**—Gas or electric welding must be done in a segregated area with shields around work to prevent other persons from coming in contact with the injurious rays. Operators shall be equipped with the burner's safety goggles for gas welding; and electric welders should wear the approved hoods and in addition shall wear leather aprons, leather gloves, spats, and safety shoes.

8. **Handtools.**—When possible, all handtools, including portable pneumatic or electrically driven tools should be returned to the toolroom at the end of each day for inspection and for any necessary repairs.

9. **Compressed Air.**—Compressed air shall never be blown towards anyone, used for cleaning personal clothing, or used to cool a person off.

FURNACES—GAS OR OIL

1. **Lighting Furnaces.**—When lighting furnaces, first see that all furnace doors are open. Insert a burning piece of oily waste on a long rod into the furnace. Allow the fuel to flow over the waste and ignite. If air is used, turn it on slowly.

2. **Personal Protection.**—Always wear safety spectacles or plastic eye shields when lighting furnaces. It is good practice to turn your head away to avoid possible flashback. Also see that no one else is in a dangerous position.

3. **Relighting.**—Before relighting furnaces, shut off fuel, and wait long enough for gases to escape. In oil furnaces see that draft plates are properly adjusted.

4. **Fire Protection.**—Oil shall not be allowed to collect on the floor. In case of fire, use a foamite extinguisher.

SANDBLASTING

1. **Spaces.**—Spaces used for metal cleaning shall be ventilated as well as possible by general room ventilation.

2. **Respirators.**—Respirators shall be used during operations when dust and fumes cannot be effectively removed.

3. **Sandblasting.**—Sandblasters, while operating sandblasting equipment when there is any possibility of abrasive coming in contact with the operator, shall wear abrasive-cleaning helmets and safety shoes.

4. **Lighting.**—Sandblasting booths and rooms must be adequately lighted.

5. **Nonstatic Hose.**—Nonstatic hose shall be used to prevent shocks from static electricity.

6. **Care of Equipment.**—As a result of weakness developed by corrosion or from structural damage caused by handling or flying objects,

an explosion may occur. Adequate maintenance of equipment is basic to the safe operation of abrasive-blasting machines. Careful attention to control valves, hose, and nozzles, and the strict adherence to correct operating procedures on the part of the operator will prevent accidents.

7. Hazards.—The chief dangers to personnel are:

a. Explosion.
b. Breathing abrasive material.
c. Bodily contact with abrasive stream.
d. Surges in the sandblast line.

APPENDIX III

MATHEMATICAL FORMULAS

Area is defined as the extent of a surface. It has two dimensions, width and breadth. The unit of measurement is designated in the square, such as square inches, square feet, square yards, etc. Volume goes one step further in that it is a measurement in three directions and is designated in cubic units of measurements, such as cubic inches, cubic feet, etc. The following formulas are useful in the calculation of volume and area of the more common geometric figures and shapes.

AREAS

Rectangle or parallelogram = Base x perpendicular height (altitude)
Square or rhombus = One-half the product of its diagonals
Triangle = Base x one-half the perpendicular height
Trapezoid = One-half the sum of the parallel sides x perpendicular height
Regular polygon = Sum of the sides x one-half of the perpendicular distance from the center to the sides
Circle = Diameter squared x 0.7854, or Pi (3.1416) x radius squared
Sphere = Diameter squared x 3.1416 (Pi), or diameter x circumference
Ellipse = Long diameter x short diameter x 0.7854
Parabola = Base x 2/3 height
Cylinder = Circumference x height x area of both ends
Pyramid or cone = Circumference of base x one-half the slant height + area of the base
Frustum of pyramid = Sum of circumference at both ends x one-half the slant height + area of both ends
Sector of a circle = Length of the arc x one-half the radius

VOLUME OF SOLIDS

Prism or cylinder (right) = Area of end x length
Pyramid or cone (right) = Area of base x one-third the altitude
Sphere = Cube of diameter x 0.5236

LENGTHS

Circumference of a circle = Diameter x 3.1416 (Pi)
Diameter of circle = Circumference x 0.3183
Diagonal of square = Distance across flats x 1.414
Length of arc = Number of degrees x diameter x 0.0087
Sides of an inscribed square = Diameter of circle x 0.7071

APPENDIX IV

GLOSSARY OF PATTERNMAKING AND FOUNDRY TERMS

AERATE.–To break up the lumps in foundry sand. To FLUFF sand.

AIR CHANNEL.–A groove or hole which carries the vent from a core to the outside of the mold.

AIR DRIED.—A core or mold dried in the air, without the application of heat.

AIR HOLE.–Hole in a casting caused by air or gas trapped in the metal during solidification.

ALLOY.–Any composite metal produced by the mixing of two or more metals or elements.

ALLOYING.–Procedure of adding elements other than those usually comprising a metal or alloy to change its characteristics and properties.

ALLOYING ELEMENTS.–Elements added to nonferrous and ferrous metals and alloys to change their characteristics and properties.

ANCHOR.–An appliance used to hold cores in place in the mold.

ANNEAL.–Heating a metal or alloy to a designated temperature and allowing to cool slowly.

ARBOR.–A device used to lift or to reinforce a mass of sand.

ATMOSPHERIC PRESSURE.–The pressure of air at sea level, approximately 14.7 pounds per square inch.

BACK DRAFT.–Is applied to a surface of a pattern requiring draft but the draft slopes in the wrong direction.

BAKED CORE.–Formed body of core sand that has been subjected to heat.

BALANCED CORE.—One with the core seat so proportioned that it will overbalance that part of the core extending into the mold cavity.

BARREL.–A cylindrical body long in relation to its diameter and either hollow or solid.

BARS.–Braces or ribs placed across the cope portion of a flask.

BASIN.–A cavity on top of the cope into which metal is poured before it enters the sprue.

BATCH.–Amount or quantity of core or molding sand or other material prepared at one time.

BATH.–Molten metal on the hearth of a furnace, in a crucible, or in a ladle.

BATTEN.–Wooden bar or strip fastened to patterns to hold them straight or to prevent distortion through the ramming of the mold.

BEAD.–A half-round cavity in the mold, or a half-round projection or molding on a casting.

BEAD-SLICKER.–A tool used for finishing a hollow place in the mold.

BEDDING A CORE.–Resting an irregular-shaped core upon a bed of sand for drying.

BEDDING IN.—Sinking a pattern down into the sand to the desired position and ramming the sand about it.

BELLOWS.–A device operated with both hands for producing a current of air.

BENCH MOLDING.–The process of making small molds on a bench.

BENTONITE.–A widely distributed and peculiar type of clay which is considered to be the result of devitrification and chemical alteration of the glassy particles of volcanic ash or tuff. Used in the foundry to bond sand.

BINARY ALLOY.–An alloy of two metals.

BINDERS.–Materials used to hold molding sand together.

BLACKING.–A thin facing of graphite or powdered charcoal brushed or dusted over the surface of a mold to protect the sand from the hot metal.

BLIND RISER.–An internal riser which does not reach to the exterior of the mold.

BLOW HOLE.–A hole in a casting caused by trapped air or gases.

BODY CORE.–The main core.

BOIL.–Agitation of molten metal by steam or gas.

BOND.–Cohesive material in sand.

BOSH.–See Swab.

BOSS.–A projection on a casting of circular cross section.

BOTTOM BOARD.–A rough board similar to a molding board upon which the finished mold rests.

BOTTOM POUR LADLE.–Ladle where metal, usually steel, flows through a nozzle in the bottom.

BOTTOM POUR MOLD.—Mold gated at the bottom.

BRACKET.–Strengthening strip or rib on a casting.

BRANCH CORE.–Part of a core assembly.

BRANCH GATE.–Two or more gates leading into the mold cavity.

BRASS.—An alloy composed chiefly of copper and zinc.

BREAK-OUT.–A rupture of a mold permitting the molten metal to flow out at the joint. Also called a "run-out."

BRIDGE.–Material adhering to the furnace wall which slows or prevents descent of the furnace charge.

BRONZE.–An alloy composed chiefly of copper and tin.

BUCKLES.—Swellings in the surface of a mold due to the generation of steam below the surface, which cannot escape.

BUILT-UP PLATE.–A pattern plate with the cope pattern mounted or attached to one side with the drag on the other. See Match Plate.

BULB SPONGE.–Combined rubber bulb and sponge. See Swab.

BULL-LADLE.–A two-man ladle used in carrying molten metal.

BURNER.–A device which mixes fuel and air intimately to provide perfect combustion when the fuel is burned.

BUTT-RAMMING.–Ramming with the flat end of a rammer.

CAP CORE.–A core superimposed upon a pattern to complete a portion of the mold cavity not given shape by the pattern.

CARD OF PATTERNS.–A number of patterns fastened to a common gate.

CAST IRON.–The most common of metals, mined as iron ore.

CAST-IN PLATE.–A plate cast in the foundry with cope and drag patterns attached.

CAST STEEL.–Cast iron hardened and toughened by one of various steelmaking processes.

CASTING.–Metal object cast to the required shape as distinct from one shaped by a mechanical process.

CASTING STRAINS.–Strains resulting from internal stresses created during cooling of the casting.

CENTERLINE.–Well-defined knife or gage line placed upon the work to serve as a basis from which dimensions are to be measured.

CENTRIFUGAL CASTING.–Process of filling molds by pouring the metal into a sand or metal mold revolving about either its horizontal axis or vertical axis, or pouring the metal into a mold that is revolved before solidification of the metal is complete. The molten metal is moved from the center of the mold to the periphery by centrifugal force.

CHAPLET.–Metal supports used to hold a core in place when the size of the core seat is inadequate.

CHEEK.–The section or sections of a flask lying between the drag and the cope. Necessitated by difficulty of molding unusual shapes, or in cases where more than one parting of the mold is required.

CHILL.–A metal object placed in the wall of a mold, causing the metal to solidify more rapidly at that point.

CHUCK.–A small bar between the long bars of a flask.

CHURNING.–Moving a rod up and down in the riser to keep the molten metal from "freezing." Also called "pumping."

CLAY WASH.–Clay and water mixed to a creamy consistency.

CLEAT.–Wooden bar or strip as fastened to molding boards to support and prevent distortion.

CLOSE-OVER.–The procedure of lowering a part of the mold over some projecting portion such as a core.

COLD SHUT.–The imperfect junction where two streams of molten metal meet but do not fuse together.

COLLAPSIBLE PATTERN.–A pattern so constructed as to permit its removal from the mold in sections.

COMPOSITE CASTING.–A casting that is poured around inserted sections of a different metal.

COMPOSITE CONSTRUCTION.–Welding or brazing a casting to a rolled or forged object to form a complete assembly.

CONTRACTION.–The amount that the metal will have decreased in size from the time it is poured to the time the temperature has fallen to the normal temperature of the metal.

CONTRACTION, LIQUID.–Shrinkage or contraction in molten metal as it cools from one temperature to another while in the liquid state.

CONTRACTION RULE (ALSO TERMED SHRINKAGE RULE).–A rule having the graduations so enlarged as to compensate for the lessening in the size of a casting caused by the decreasing size of the cooling metal.

CONTRACTION, SOLID.–Shrinkage or contraction as a metal cools from the solidifying temperature to room temperature.

COPE.–The top section of a flask.

COPING OUT.–The extension of the sand of the cope downward into the drag where it takes an impression of a pattern.

COPPER.–A metal of reddish color, mined as copper ore.

CORE.–That part of a mold or body of sand which forms a hole, a recess, or the interior of a casting. Particularly applied to those bodies of sand formed within a core box and subsequently baked.

CORE ARBOR.–Cast-iron grid or bar embedded in large cores for means of support and handling.

CORE BINDER.–Material mixed with core sand to hold the grains together.

CORE BLOWER.–Machine which rams the core by blowing sand into the core box under air pressure.

CORE BOX.–Specially constructed form into which sand is rammed to give the required shape to a core.

CORE CAVITY.–The interior form of a core box that gives shape to the core.

CORE COMPOUND.–Commercial mixture used in core sand to hold the grains together. See Core Binder.

CORED CONSTRUCTION.–Refers to a casting whose interior is formed by a dry sand core or cores.

CORE DRIER.–A metal shell that conforms to the shape of the area of a core upon which it rests while drying.

CORE FRAME.–Frame of skeleton construction used in forming intermediate- and large-sized cores.

CORE LOCK.–Matched surfaces so formed upon contacting core bodies as to ensure their correct registering.

CORE-MADE MOLD.–A mold assembled from dry sand core bodies.

CORE MARKER.–A core seat so shaped that the core will register correctly when placed in the mold. See Marking a Core.

CORE OVEN.–Specially designed oven in which cores are baked.

CORE PASTE.–Material in paste form used as an adhesive to join sectional cores.

CORE PLATE.–Metal plate used to support cores while they are being baked.

CORE PRINT.–That part of a pattern which has been so designed as to form a seat to locate and support a core within a mold.

CORE ROD.–Rod forms used to support a core internally.

CO_2 CORE.–Core made from silica sand and sodium silicate (water glass).

CORE SAND.–Sand free from clay; it is nearly pure silica (any sharp sea sand).

CORE WASH.–A silica or graphite mixture with which cores are painted to prevent erosion of the sand and penetration of the molten metal into the sand.

CORE VENTS.--A round or oval shaped wax product used to form the vent passage in a core.

CORE VENTS.–A metal screen or slotted piece used to provide passage for the air back to the atmosphere and at the same time prevent the passage of the sand grains, thus trapping the sand in the core box cavity and uniformly filling the cavity.

CORNER TOOL.–A tool used for slicking the corner of a mold, inaccessible to the ordinary form of finishing tools.

COVER CORE.–A core set in place during the ramming of a mold to cover and complete a mold cavity partly formed by the withdrawal of a loose part of the pattern.

CRACK, COLD.–Appears in a casting after solidification and cooling due to excessive strain generally resulting from nonuniform cooling.

CRACK, HOT.–Developed in a casting before it has cooled completely; and usually due to some part of the mold restraining the solid contraction of the metal.

CRACKER CORE.–A vent core used to break the skin in the riser and allow the atmospheric pressure to push the metal into the mold cavity. Also called a "fire-cracker."

CROSSBAR.–Wood or metal bar placed in a flask to give greater anchorage to the sand than is afforded by the four walls of the flask.

CROSS SECTION.–A view of the interior of an object that is represented as being cut in two, the cut surface presenting the cross section of the object.

CRUCIBLE.—A ceramic pot or receptacle of graphite-clay, clay, or other refractory material in which metal is melted. Term is sometimes applied to pots of cast iron, cast or wrought steel.

CRUSHING.—The pushing out of shape or distortion of a core or mold when parts of the mold do not fit properly.

CUTTING OVER.—Turning over sand by shovel or otherwise to obtain a uniform mixture.

DOWEL.—A pin of various types used on the joint between the sections of parted patterns or core boxes to ensure their correct registering.

DRAFT.—The angle of slant tending away from the line of parting given to those surfaces of a pattern which would lie in the direction in which the pattern or its component parts are drawn from the sand.

DRAG.—The bottom section of a flask.

DRAW PLATE.—Metal plate set into a pattern to facilitate its drawing.

DRAWBACK.—Portion of a mold supported upon an iron plate which is so arranged that it may be drawn back for the removal of the pattern.

DRAW BAR.—A bar used for lifting the pattern from the mold.

DRAWING.—Removing a pattern from the sand.

DRAW SCREW.—A rod which can be screwed into a pattern to act as a handle for drawing the pattern from the mold.

DRAW SPIKE.—A pointed rod of iron or steel driven into a wooden pattern to act as a handle for withdrawing the pattern from the sand in the mold.

DRIBBLE.—Pouring molten metal into the mold in an unsteady stream.

DROP.—The falling of an overhanging body of sand into the mold.

DROP BALL.—A heavy weight usually in ball or pear shape which is dropped from a height to break large pieces of scrap.

DROP OR TAIL CORE.—A type of core used in forming comparatively small openings occurring above or below the parting. The seat portion is so shaped that the core is easily dropped into place.

DUCTILITY.—The property permitting permanent deformation by stress in tension without rupture.

DRY SAND MOLD.—A mold which has been baked in an oven to fix its shape permanently and to give it a hard surface.

EAR.—Usually refers to a comparatively thin, rounded, end projection of a rectangular cross section.

FACING.—Refractory material applied to the surface of the mold.

FACING SAND.—Specially prepared sand in the mold adjacent to the pattern to produce a smooth casting surface.

FALSE COPE.—Temporary cope used only in the forming of the parting surface and therefore not a part of the finished mold.

FALSE SIDE.—An intermediate loose panel supporting projections or depressions set against the inside of a core box or frame.

FEED HEAD.—A reservoir of molten metal from which the casting feeds as it solidifies. Also called a Riser.

FEEDING.—Supplying additional molten metal to a casting to compensate for volume shrinkage during solidification.

FERROUS.—Relating to or containing iron.

FILE FINISH.—Finishing a metal surface with a file.

FILLET.—Concave corner piece used at the intersection of surfaces. A struck fillet is one that is dressed to shape in place. A planted fillet is one that is made separately and affixed in place.

FIN.—A thin projection or ridge occurring on a casting at the point where two sections of the mold come together.

FINISH ALLOWANCE.—An amount of stock left upon the surface of a casting for the operation of machine finish.

FINISH MARK.—A V- or f- form symbol appearing on the line of a drawing that represents the edge of the surface of the casting to be machine-finished.

FLANGE.—A stiffening member or the means of attachment to another object.

FLASK.—Frame consisting of two or more sections made of wood or metal and used to enclose the sand in which a mold is formed.

FLASK BARS.—Bars added to the cope to strengthen and hold the sand.

FLASK PINS.—Pins and corresponding sockets on the joint of the sections of a flask to permit their separation and registering.

FLAT-BACK.—A pattern with a flat surface at the joint of the mold. A flat-back pattern lies wholly within the drag.

FLOOR MOLDING.—The process of making large molds on the foundry floor.

FOLLOW BOARD.—Board having its surface formed so as to support a pattern and to coincide with its parting line.

FOLLOW BLOCK.–A block having its surface formed so as to support a fragile pattern and to coincide with its parting line.

FOUNDRY PRACTICE.–An enterprise or a department of such where molten metal is given shape by being poured into molds made of a refractory material.

FREEZING.–The solidification of molten metal in the mold.

GAGGER.–An L-shaped rod used to reinforce and help to support the sand of the cope.

GATE.–Channel that conducts the metal from the sprue to the mold cavity. Specifically, the point where molten metal enters the casting cavity. Sometimes employed as a general term to indicate the entire assembly of connected columns and channels carrying the metal from the top of the mold to that part forming the casting cavity proper. Term also applies to the pattern parts which form the passages, or the metal that fills them.

GATE CUTTER.–U-shaped piece of sheet metal used in forming a gate.

GATED PATTERNS.–One or more patterns with gating system attached.

GRAPHITE.–Native carbon in hexagonal crystals, also foliated or granual massive, of black color with metallic luster. Used for crucibles, foundry facings, lubricant, etc.

GREEN SAND.–Sand containing sufficient refractory clay substance to bond strongly without destroying the venting quality when rammed to the required degree of hardness.

GREEN SAND CORE.–Body of sand usually formed directly from a pattern in making the mold. One that is not baked.

GREEN-TOPPED CORE.–A core made in two parts, the bottom half being dry sand to produce the necessary support, and the top half, green sand.

GRIND.–Truing up the surface of a casting with an abrasive wheel or belt.

HARD SAND MATCH.–A body of sand shaped to conform to the parting line of the mold, upon which the pattern is laid in starting to make a mold. Sand is made hard by addition of linseed oil, litharge, and portland cement.

HEAD.–The pressure exerted by a column of fluid, such as molten metal. See Riser.

HEADING.–Permanent or temporary heads over which lags or staves are laid.

HEAP SAND.–Sand in piles on the foundry floor.

HINDERED CONTRACTION.–The prevention of the free contraction of a metal or alloy by mold condition or casting design.

HORN GATE.–A circular-shaped gate or sprue form having a rectangular or round cross section, used when the molten metal is to enter the mold cavity well below the parting line.

HOT SPOTS.–Areas of extra mass usually found at the junction of sections.

HOT SPRUING.–Removing castings from the gates before the metal has completely solidified. This operation is necessary on light-section or intricate castings which might be cracked if they were removed in the cold state.

HOT TEARS.–Cracks in metal castings formed at elevated temperatures by contraction stresses.

HUB.–A projection which is round or otherwise and is usually the center of some rotary movement.

INGOT.–Commercial pig or block in which ferrous and nonferrous materials are made available to the foundry field.

INTERCASTING.–The casting of interlinking members.

JARRING MACHINE.–A molding machine that packs the sand by jarring. The sand, pattern, and flask are raised and dropped upon a table. The mechanical jarring causes the sand to pack into place.

JET BAR.–A small bar extending below the surface of the cope.

JIG.–Any device so arranged that it will expedite a hand or machine operation.

JOINT.–The portion of the mold where the cope and drag come together.

JUMP.–Frame to increase the depth of the flask.

KISS CORE.–A core that contacts another core or is set against the side of a pattern to supply a portion of the mold cavity not furnished by the pattern.

KNOCK OUT.—To remove sand and casting from the flask.

LAYOUT.–A full size drawing of a pattern having the appropriate shrink rule and showing pattern construction and core arrangement.

LAYOUT BOARD.–A board upon which a layout of a pattern is made.

LIFTER.–A molder's tool with a flat end at right angles to the stem, used to lift loose sand from deep pockets in the mold.

LIFTING HOOKS.—Form of staples embedded in cores to facilitate handling and setting.

LIFTING PRESSURE.–The lifting force caused by the hydrostatic pressure of the molten metal against the core or the cope section of the mold. It may be somewhat increased by gases, generated in the mold, seeking release.

LIQUID CONTRACTION.—Shrinkage or contraction in molten metal as it cools from one temperature to another while in the liquid state.

LIQUIDUS.—The temperature at which solidification of metal begins on cooling and the temperature at which the last portion of solid metal becomes liquid on heating.

LOAM.—A coarse, strongly bonded molding sand used for loam and dry sand molding.

LOAM-MOLD.—A mold built up of brick, covered with a loam mud and then baked before being poured.

LOCKING SURFACES.—See Core Lock.

LOOSE FLANGE.—Flange member that may be drawn independently of the body of a pattern and is often used in combination with a cover core or slab core.

LOOSE PIECE.—Part of a pattern so attached that it remains in the mold and is taken out after the body of the pattern is drawn.

LUG.—An earlike projection that is frequently split, as the clamping lug on the tail stock of a lathe.

MACHINE FINISH.—Operation of turning or cutting from the surface of metal an amount of stock in order to produce a finished surface.

MACHINABILITY.—The capability of being cut, turned, broached, etc., by machine tools.

MAGNESIUM.—Silvery white metal, one-third lighter than aluminum, obtained from ocean water or from subterranean brine.

MALLEABLE CAST IRON.—Cast iron made ductile through an annealing process.

MARKING A CORE.—Shaping the core print portion of a core and its seat so that the core cannot be misplaced within the mold.

MASTER PATTERN.—A pattern embodying a special contraction allowance and used for making castings that are to be employed as patterns in production work.

MATCH.—A form of wood, plaster of paris, sand or other material on which an irregular pattern is laid while the drag is rammed.

MATCHBOARD.—See Match Plate.

MATCH PLATE.—Wood or metal plate to which a pattern is attached at its parting line.

MATCHED PARTING.—Forming of a projection upon the parting surface of the cope half of a pattern and a corresponding depression in the surface of the drag.

MEDIUM-GRADE PATTERN.—A pattern used occasionally which may therefore be of a cheaper nature than a standard pattern.

METAL CAVITY.—See Mold Cavity.

METAL PATTERN.—Patterns made from aluminum, brass, bronze, white metal, and cast iron used as patterns in high production work.

METALLURGY.—Science dealing with the constitution, structure and properties of metals and alloys, and the processes by which they are obtained from ore and adapted to the use of man.

MICROSTRUCTURE.—The structure and characteristic condition of metals as revealed on a ground and polished (etched or unetched) specimen at magnification above 10 diameters.

MISRUN.—A casting not fully formed.

MOCK-UP.—A full size structural model built accurately to size to determine the parting line before the job is started.

MODEL.—A facsimile of an object, either miniature or full size.

MOLD.—As applied to founding is a body of sand containing the impression of a pattern.

MOLD CAVITY.—Impression left in the sand by a pattern.

MOLD WEIGHTS.—Weights placed on the cope of the mold to help overcome the lifting pressure.

MOLDING BOARD.—Board reinforced with cleats, having a true surface upon which a pattern is laid for the ramming of the drag.

MULTIPLE MOLDS.—Series of molds stacked one upon another and poured from a common runner.

NATURAL BONDED SAND.—Sand containing a sufficient amount of clay bond, either present in its natural state or added before shipment, to make the sand suitable for immediate use.

NONFERROUS.—Pertaining to metals not having iron as the base metal.

NORMALIZING.—Heating iron-base alloys to approximately 100°F above the critical temperature range followed by cooling to below that range in still air at ordinary temperature.

NOWEL.—The lower section of the flask, more commonly called the Drag.

ONE-PIECE PATTERN.—Solid pattern but not necessarily made from one piece of wood.

ONE-PIECE BUILT-UP PATTERN.—A pattern not necessarily made from one piece of wood; it can be a series of pieces formed to make a certain shape, but the pattern will be in one piece.

OPEN MOLD.—Copeless mold used in making rough flat castings.

OPEN RISER.—A riser that is not covered.

OPEN SAND CASTING.—A casting poured in a mold which has no cope or other covering.

OVERHANG.–The extension at the parting line of the cope half of a core print beyond that of the drag in order to provide clearance for the closing of the mold. Also known as shingle.

PAD.–Shallow projection on a casting distinguished from a boss or lug by shape and size.

PADDING.–Is used to induce progressive solidification in members or sections of uniform thickness and to prevent the defects known as midwall or centerline shrinkage.

PARTED PATTERN.–Pattern made in two or more parts. See Split Pattern.

PARTING.–Joint or plane of separation in a mold made of two or more sections.

PARTING COMPOUND.–Fine bondless commercial preparation dusted over the joint of a mold to prevent the contacting surfaces from adhering.

PARTING LINE.–That line about a pattern where the pattern or its mold separates.

PARTING SAND.–Fine bondless sand. See Parting Compound.

PATTERN.–Form modeled in any material from which a mold may be made; it is the basis of foundry practice.

PATTERN BOARD.–See Molding Board.

PATTERN CHECKING.–Verifying the dimensions of a pattern with those of the drawing as well as its moldability.

PATTERN LAYOUT.–Full size drawing of a pattern showing its arrangement and structural features.

PATTERN LETTERS AND FIGURES.–Affixed to a pattern as a means of keeping a record of the pattern and for the identification of the casting.

PATTERN MEMBERS.–The component parts that go toward making up a pattern.

PATTERN RECORD CARD.–A filing card giving a description, location in storage, and the movement of a pattern.

PATTERNMAKING.–Deals with the modeling in wood, metal, or other materials, of objects that are to be cast in metal.

PATTERNMAKER'S SHRINKAGE.–Shrinkage allowance made on all patterns to compensate for the change in dimensions as the solidified casting cools in the mold from the freezing temperature of the metal to room temperature.

PEEN-RAMMING.–Ramming with the wedge end of the rammer.

PERMANENT MOLD.–A long-life mold into which metal is poured by gravity.

PERMEABILITY.–Refers to the venting qualities or to the rate at which gases can pass through the sand.

PIG IRON.–Cast iron as it comes from the blast furnace in which it was produced from iron ore.

PIN HOLE.–Small hole under the surface of the casting.

PIT MOLDING.–The process of making very large molds in pits in the foundry floor.

PLASTER PATTERN.–A pattern made from plaster of paris.

PLUGGED IMPRESSIONS.–Impressions formed by inserting a plug of required shape through a pattern into the sand.

POROSITY.–State of being full of pores or holes like a sponge.

POURING.–Filling the mold with molten metal.

PRESSURE PLATE.–A match plate cast of aluminum in plaster. The metal is forced into the mold under pressure.

PRINT-BACK.–The replacing of the pattern in the mold to pick up lost detail.

PYROMETER.—An instrument for determining elevated temperatures.

RAMMING.–Packing sand around the pattern in making a mold.

RAM-UP BLOCK.–See Follow Board.

RAM-UP CORE.–See Cover Core.

RAPPING.–Jarring a pattern to loosen it from the sand, preparatory to drawing it out.

RAPPING BAR.–Iron bar used as an aid in rapping a pattern.

RAPPING PLATE.–Metal plate attached to a pattern for the insertion of a rapping bar.

REFRACTOR.–Material having heat-resisting qualities.

RIB.–A stiffening member.

RIDDLED SAND.–Sand that has been passed through a riddle or screen.

RISER.—An opening made from the mold cavity to the top of the mold in which the metal will rise during the pouring operation and which may later act as a feeder for the prevention of porosity in the casting due to shrinkage.

ROLL-OUT LOOSE-PIECES.–Loose pieces of the pattern or core box which when removed will form a rolling action or a hinge.

ROLLING OVER.–Reversing the position of a mold.

RUNNER.–Channel through which the molten metal is conducted to the gate or gates from the sprue or down gate.

RUN-OUT.–Metal flowing through a defect in the mold.

SAND BLAST.—Sand driven by a blast of compressed air or steam used to clean castings.

SAND CONTROL.—Procedure whereby various properties of sand such as fineness, permeability, green strength, moisture content, etc., are adjusted to eliminate casting defects.

SAND MATCH.—See Hard Sand Match or Match.

SCABS.—Imperfections in a casting due to the breaking away of portions of the mold surface. Rough surfaces of castings.

SECTIONAL CORE.—A core made in two parts and pasted or wired together.

SETUP CORE.—A simple core used to support a small core in the mold for extra bearing surface. May be designed to form a boss on the end of a casting or form a seat for other cores.

SHELL MOLDING.—A sand molding process in which a mixture of sand and thermosetting plastic is applied to a heated metal pattern.

SHIFT.—A casting defect resulting from a mismatch of the cope and drag.

SHRINK BOB.—See Riser.

SHRINK HOLE.—A hole or cavity in a casting resulting from contraction and insufficient feed metal, and formed during the time the metal changes from the liquid to the solid state.

SHRINKAGE.—Arrangement of the molecules of metal as it passes from a liquid to a solid state. (See Contraction.)

SHRINKAGE RULE.—See Contraction Rule.

SKELETON PATTERN.—A framework representing the interior and exterior form and the metal thickness of the required casting.

SKIMMING.—Holding back the surface dirt and slag when pouring molten metal.

SKIN-DRYING.—Drying or baking only the surface of the mold.

SLAB CORE.—Plain flat core.

SLICKER (SLICK).—One of a number of tools used for mending and smoothing the surface of a mold.

SLIP JACKET.—Wood or metal frame used to slip over a snap flask made mold to reinforce it while it is being poured.

SLUSH MOLDING.—A process in which the metal is allowed to cool long enough to form a shell, and then the mold is inverted and the remaining molten metal is poured out, leaving a hollow center.

SNAP FLASK.—Flask used for bench molding and distinguished from the ordinary type of flask by being divided diagonally and the two parts hinged and latched together so that the flask may be removed from the mold.

SOLDIERS.—Wooden pegs or blocks used in place of gaggers to reinforce sand when molding.

SOLID CONTRACTION.—Shrinkage or contraction as a metal cools from the solidifying temperature to room temperature.

SOLIDIFYING CONTRACTION.—Shrinkage or contraction as a metal solidifies.

SPIDER.—An open web whose members radiate from the center like the spokes of a wheel.

SPINDLE.—An upright post on which the sweep arm revolves in sweeping up a mold.

SPLIT PATTERN.—A pattern that is parted for convenience in molding. Parted pattern is the correct term.

SPONGY CASTINGS.—Castings in which the metal is very open-grained or porous.

SPOT FACING.—Turning a circular bearing surface about a hole.

SPRUE.—An opening that conducts the metal from the top of the mold to the gate or gates. The term SPRUE is also applied to the metal which fills the pouring channels and is found attached to the casting.

SPRUE BUTTON.—Attached to the cope pattern to indicate where the sprue should cut.

SPRUE CUTTER.—A piece of tubing that cuts the sprue hole through the cope half of the mold.

SPRUE PLUG.—Wood or metal tapered pin used to form a sprue opening.

STANDARD PATTERN.—A pattern in daily use or used at frequent intervals and therefore of first quality workmanship and material.

STANDARD PATTERN COLORS.—Colors to be used for the marking of patterns as recommended by the American Foundrymen's Society and registered as Commercial Standard C S 19-30, Washington, D.C., or the TENTATIVE STANDARD COLORS as adopted as of 1958 by the Pattern Colors Committee, Pattern Division, American Foundrymen's Society.

STAVE CONSTRUCTION.—Attaching staves to polygon-shaped heads in the building of cylindrical bodies and also used for semicircular cavities.

STEPPED-UP.—So called because the material, when fastened together, resembles steps.

STOCK CORES.—Cores of standard diameters usually made on a core machine and kept in stock. They are cut to the required lengths.

STOOLING.—The process of supporting green sand cores in machine molding while the pattern is being drawn.

STOPPING OFF.—Process of filling up with sand a part of a mold to eliminate that part not wanted as a part of the casting.

STOPPING-OFF CORE.—A core used in stopping off an unwanted part of a mold.

STOPPING-OFF PIECE.—Specially prepared piece or section of a pattern used for stopping off an unwanted part of a mold or core box.

STRAIGHTEDGE.—Relatively long piece of material having one or both edges a true plane.

STRAINER CORE.—A small perforated core in the sprue, runner, or gate to prevent entrance of slag and other extraneous materials into the mold cavity.

STRESS RELIEVING.—Heat treatment to remove stresses or casting strains.

STRICKLE OR STRIKE.—Piece of material having a straight or curved edge used for removing excess sand from a flask or pattern.

STRIPPING PLATE.—A plate formed to the contour of the pattern which holds the sand in place while the pattern is drawn through the plate.

SUPERIMPOSED CORE.—See Cap Core.

SUSPENDED CORE.—A core having the core seat so formed that it may be suspended above the mold.

SWAB.—Small bundle of bound hemp used in dampening the sand lying along the edge of a pattern, preparatory to the drawing operation.

SWEEP.—A board or template shaped to a required profile used to remove excess material from a mold or core.

SWEEP WORK.—Forming molds or cores by the use of sweeps instead of patterns.

SWELL.—An enlargement on the face of a casting, due to a yielding mold face.

SYNTHETIC SAND.—Sand which is mixed in correct proportions of unbonded sand and a suitable binder such as clay, and then tempered.

TAP.—To withdraw a molten charge from the melting unit.

TALLY MARK.—A symbol or combination of symbols indicating the correct location of a loose piece of a pattern or core box.

TEMPERING SAND.—Dampening and mixing sand to produce a uniform distribution of moisture.

TEMPLATE.—Thin piece of material with the edge corresponding to a specific contour and used as a guide or for checking purposes.

TEMPORARY PATTERN.—A pattern used to produce one or two castings and therefore made as cheaply as the case will permit.

TEST BAR.—Bar cast of a standard shape and size to determine the physical and chemical properties of the metal.

TIE PIECE.—A bar-like connecting member not necessarily shown on the drawing but built into the pattern and made a part of the casting in order to equalize the contraction occurring between widely separated members.

TIGHT FLASK.—A flask with rigid framework—the opposite of a snap flask.

THERMOCOUPLE.—A bimetallic device capable of producing an electromotive force roughly proportional to temperature differences on its hot and cold junction ends and used in the measurement of elevated temperatures.

TOOL CLEARANCE.—An open space provided in a casting for a cutting tool to enter in finishing an enclosed surface.

TROWEL.—Tool used in slicking, patching, and finishing a mold.

TUCKING.—Packing sand with the fingers around flask bars, gaggers, patterns, and other places where the rammer does not give the desired density.

UNDERCUT.—Part of a mold requiring a drawback.

UPSET.—Frame to increase the depth of a flask. See Jump.

VENT.—An opening in a mold or core to permit escape of steam and gases.

VENT CORE.—See Cracker Core.

VENT WAX.—Wax in rod shape placed in the core during manufacture. In the oven the wax is melted out leaving a vent or passage.

VENTING.—Perforating the sand over and around a mold cavity with a venting needle to assist in the escape of the gases.

VENTING NEEDLE.—Thin stiff wire or rod used in venting the sand.

VIBRATOR.—A mechanical device used to loosen a pattern from the mold.

WARPING.—Distortion of a board through the absorption or expulsion of moisture. Also applied to a casting drawn out of shape by uneven cooling of the metal.

WATER BRUSH.—Combined rubber bulb and brush. See Swab.

WEAK SAND.—Sand that will not hold together due to an insufficient amount of clay.

WEB.—A plate or thin member lying between heavier members.

WHIRL GATE.—A gate or sprue arranged to introduce metal into a mold tangentially, thereby giving the metal a swirling motion.

WORKING MODEL.—Rough model of a casting which is made so that the molding possibilities and the structural features of the pattern may be more clearly visualized.

ZIRCON SAND.—A very high refractory material composed chiefly of zirconium silicate of extreme hardness, having low thermal expansion and high thermal conductivity.

INDEX

☆ U. S. GOVERNMENT PRINTING OFFICE : 1964 O - 748-987